THIS DRAWING IS UNPUBLISHED. RELEASED FOR PUBLICATION -,- .
© COPYRIGHT - BY TYCO ELECTRONICS CORPORATION. ALL RIGHTS RESERVED.

LOC	DIST
G	86

REVISIONS

P	LTR	DESCRIPTION	DATE	DWN	APVD
	B1	REV PER ECR 08-015124	13JUN08	JR	CK

1. HIGH CONDUCTIVITY WROUGHT COPPER ANNEALED

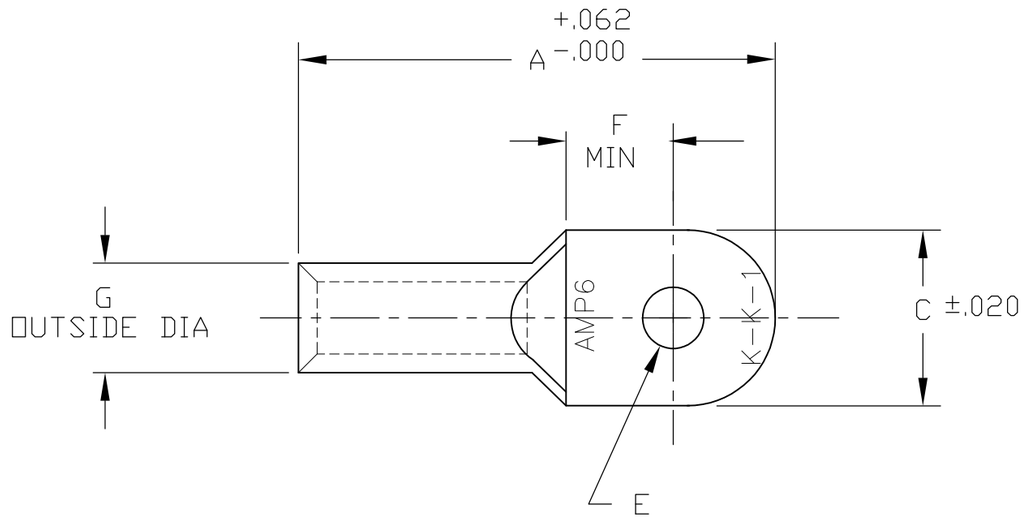

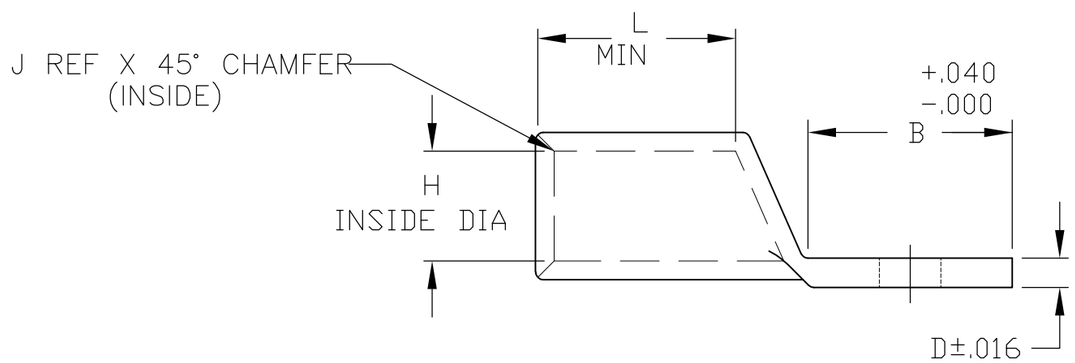

	L	J	H	G	F	E	D	C	B	A	PART NUMBER
OBSOLETE	~~.750~~	~~.031~~	~~.232~~	~~.352~~	~~.420~~	~~ø.197~~	~~.094~~	~~.563~~	~~.813~~	~~1.813~~	~~606288-5~~
	.750	.031	.232	.352	.420	ø.390	.094	.563	.813	1.813	606288-3
	.750	.031	.232	.352	.420	ø.328	.094	.563	.813	1.813	606288-2
	.750	.031	.232	.352	.420	ø.265	.094	.563	.813	1.813	606288-1

DIMENSIONS, INCHES

THIS DRAWING IS A CONTROLLED DOCUMENT.

DIMENSIONS: INCHES

TOLERANCES UNLESS OTHERWISE SPECIFIED:

0 PLC	± -
1 PLC	± -
2 PLC	± .02
3 PLC	± .005
4 PLC	± .0005
ANGLES	± 5°

MATERIAL - 1

FINISH TIN PLATED

DWN jr ruth 01JUN05
CHK MJ SPICER 01JUN05
APVD MJ SPICER 01JUN05
PRODUCT SPEC —
APPLICATION SPEC —
WEIGHT —

CUSTOMER DRAWING

Tyco Electronics

Tyco Electronics Corporation
Harrisburg, Pa 17105-3608

NAME AMP TUBULAR TERMINAL 6 AWG

SIZE	CAGE CODE	DRAWING NO	RESTRICTED TO
A3	00779	C-606288	—

SCALE	SHEET	REV
1:1	1 OF 1	B1

OBSOLETE
NOT the LATEST
REVISION