THIS DRAWING IS UNPUBLISHED. RELEASED FOR PUBLICATION -,- .
© COPYRIGHT - By - ALL RIGHTS RESERVED.

LOC	DIST
AF	50

REVISIONS

P	LTR	DESCRIPTION	DATE	DWN	APVD
	P	REVISED PER ECR-12-013445	18OCT12	KH	PD

1 CONTINUOUS STRIP ON REELS

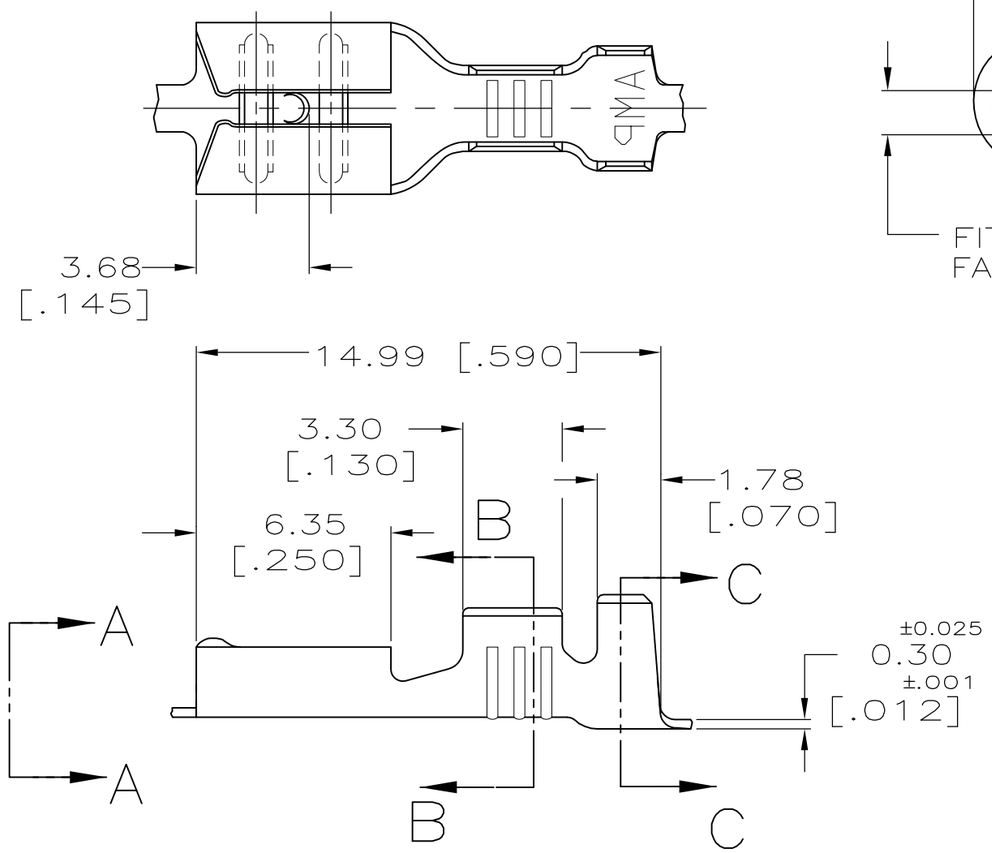

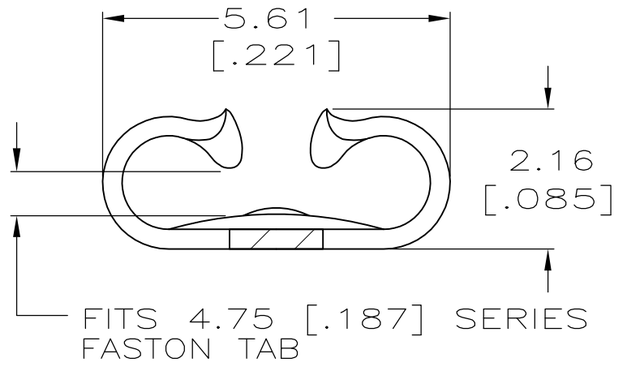

VIEW A-A
SCALE 10:1

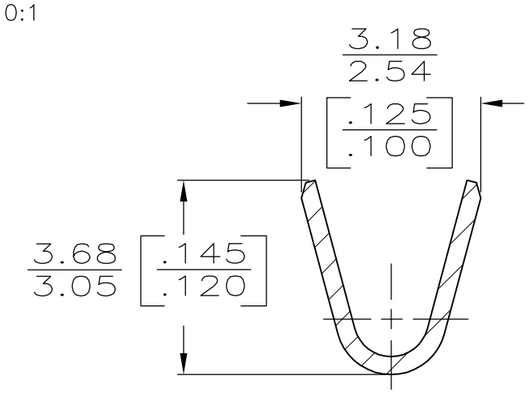

SECTION B-B
SCALE 10:1

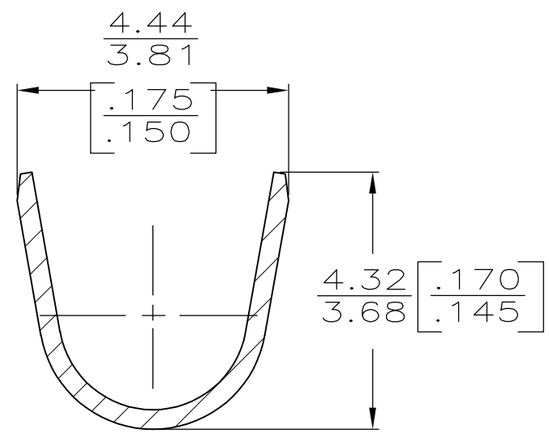

SECTION C-C
SCALE 10:1

FINISH	INSULATION RANGE	WIRE SIZE	MATING TAB THK ±0.025 [.001]	PART NO.
TIN	2.29-3.30 [.090-.130]	0.5-1.3mm² [20-16] AWG	0.51 [.020]	42801-2
-				42801-1

THIS DRAWING IS A CONTROLLED DOCUMENT.

DIMENSIONS: INCHES

TOLERANCES UNLESS OTHERWISE SPECIFIED:

0 PLC	± -
1 PLC	± -
2 PLC	± 0.38 [.015]
3 PLC	± -
4 PLC	± -
ANGLES	± -

MATERIAL: BRASS

FINISH: SEE TABLE

DWN	JR RUTH	1/24/91
CHK	P FORTNEY	1/25/91
APVD	C MEYERS	1/25/91
PRODUCT SPEC	—	
APPLICATION SPEC	—	
WEIGHT	—	

TE Connectivity

NAME: RECEPTACLE, FASTON,™ 4.75 [.187] SERIES

SIZE	CAGE CODE	DRAWING NO	RESTRICTED TO
A3	00779	C-42801	—

CUSTOMER DRAWING

SCALE	SHEET	REV
5:1	1 OF 1	P