Part Number: 46100-2411

Mini-Fit® Plus High Cycle Header, 4.20mm Pitch, Dual Row, Right Angle, 24 Circuits, with Snap-in Plastic Peg PCB Lock, PA Polyamide Nylon 6/6, UL 94V-0, Gold (Au) Flash Over Palladium Nickel (PdNi) Contact Plating

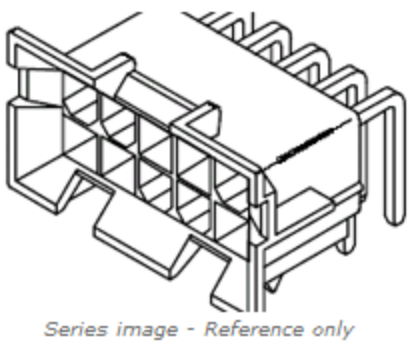

Series image - Reference only

Status:	**OBSOLETE**
Replacement:	Contact Molex
Series:	46100
Category:	PCB Headers

Go to **Part Detail**▼

CHECK DISTRIBUTOR INVENTORY

Add to My Parts

Email this page

Mates With Part(s):
15-06-0241 Mini-Fit® BMI Panel Mount Receptacle, 39-01-2245 Mini-Fit Jr.™ Receptacle, 44516-0012 Mini-Fit® BMI Slide and Lock Panel Mount Receptacle, 46101-2411 Mini-Fit® High Cycle Receptacle Header

Application Tooling

FAQ

Tooling specifications and manuals are found by selecting the products below.

Crimp Height Specifications are then contained in the Application Tooling Specification document.

Previously Available Application Tooling
Check our list of old tooling that used to be available for this part

Product Environmental Compliance

EU ELV:Product not active

EU RoHS:Product not active

EU RoHS Phthalates:Product not active

China RoHS:

REACH SVHC:Product not active

Low-Halogen Status:Product not active

EU RoHS Certificate of Compliance (PDF)

Multiple Part Product Compliance Statements
EU RoHS, REACH SVHC, & Low-Halogen

Multiple Part Industry Compliance Documents

*IPC 1752A Class C
*IPC 1752A Class D
*Molex Product Compliance Declaration

Questions on Product Environmental Compliance? EmailProductCompliance@molex.com

Request Molex's CMRT from conflictminerals@molex.com

Part Detail

COLLAPSE ALL

General

Status	**Obsolete**
Category	PCB Headers
Series	46100
Application	Board-to-Board, Power, Wire-to-Board
Comments	Current = 13A max. per circuit when header is mated to a receptacle loaded with 45750 Mini-Fit® Plus HCS Crimp Terminal Crimped to 16 AWG wire., See Molex product specification PS-45750-001 for additional current de-rating information.
Product Name	Mini-Fit® Plus
UPC	822350570312

Physical

Breakaway	No
Circuits (Loaded)	24
Circuits (maximum)	24
Durability (mating cycles max)	1000
Glow-Wire Compliant	No
Guide to Mating Part	Yes
Lock to Mating Part	Yes
Material - Plating Mating	Gold
Material - Plating Termination	Tin
Net Weight	9.176/g
Number of Rows	2
Orientation	Right Angle
PC Tail Length	3.30mm
PCB Locator	Yes
PCB Retention	Yes
PCB Thickness - Recommended	1.80mm
Packaging Type	Tray
Pitch - Mating Interface	4.20mm
Polarized to Mating Part	Yes
Polarized to PCB	Yes
Shrouded	Fully
Stackable	No
Surface Mount Compatible (SMC)	No
Temperature Range - Operating	-40°C to +105°C
Termination Interface: Style	Through Hole

Electrical

(Please review the Product Specification for specific details.)	
Current - Maximum per Contact	13.0A
Voltage - Maximum	600V

Molex is a registered trademark of Molex, LLC in the United States of America and may be registered in other countries; all other trademarks listed herein belong to their respective owners.

© Copyright 2017