PART NUMBER	ITEM ① BODY	ITEM ② CONTACT	ITEM ③ INSULATOR	PACKAGING
135-3711-201	BRASS GOLD PL .00001 MIN OVER NICKEL PL .00005 MIN OVER COPPER PL .00005 MIN	BERYLLIUM COPPER GOLD PL .00003 MIN OVER NICKEL PL .00005 MIN OVER COPPER PL .00005 MIN	TEFLON	BULK PACK 25 PCS
135-3711-202	BRASS GOLD PL .00001 MIN OVER NICKEL PL .00005 MIN OVER COPPER PL .00005 MIN	BERYLLIUM COPPER GOLD PL .00003 MIN OVER NICKEL PL .00005 MIN OVER COPPER PL .00005 MIN	TEFLON	TAPE AND REEL 1500 PCS. PER FIG 1
135-3711-203	BRASS GOLD PL .00001 MIN OVER NICKEL PL .00005 MIN OVER COPPER PL .00005 MIN	BERYLLIUM COPPER GOLD PL .00003 MIN OVER NICKEL PL .00005 MIN OVER COPPER PL .00005 MIN	TEFLON	TAPE AND REEL 1500 PCS W/.005 THK COVER TAPE PER FIG 1 △2

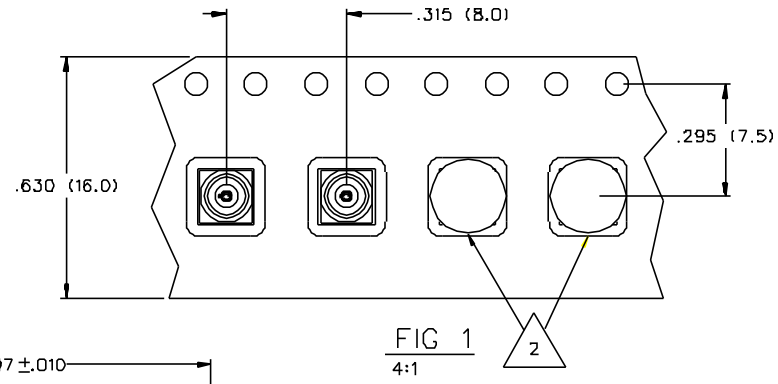

FIG 1
4:1

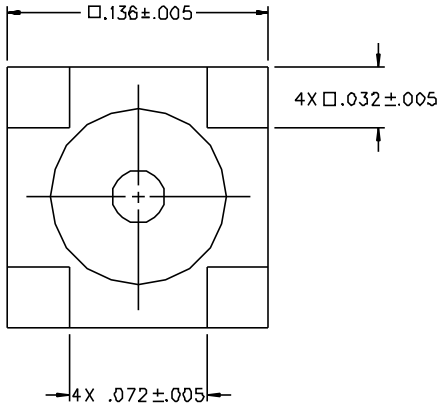

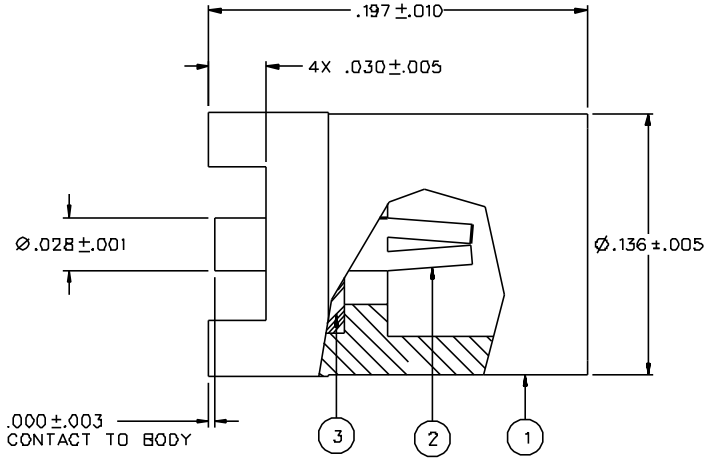

NOTES:

1. SPECIFICATIONS:

IMPEDANCE: 50 OHMS
FREQUENCY RANGE: 0-6 GHz
VSWR: NOT APPLICABLE
WORKING VOLTAGE: 170 VRMS MAX AT SEA LEVEL
DIELECTRIC WITHSTANDING VOLTAGE: 500 VRMS MIN AT SEA LEVEL
INSULATION RESISTANCE: 1000 MEGOHM MIN
CONTACT RESISTANCE:
CENTER CONTACT - INITIAL 5.0 MILLIOHM MAX, AFTER ENVIRONMENTAL 8.0 MILLIOHM MAX
OUTER CONDUCTOR - GOLD PLATED INITIAL 1 MILLIOHM MAX, AFTER ENVIRONMENTAL 1.5 MILLIOHM MAX
NICKEL PLATED INITIAL 2.5 MILLIOHM MAX, AFTER ENVIRONMENTAL 3.5 MILLIOHM MAX
BRAID TO BODY - NOT APPLICABLE
CORONA LEVEL: 190 VOLTS MINIMUM AT 70,000 FEET
INSERTION LOSS: NOT APPLICABLE
RF LEAKAGE: NOT APPLICABLE
RF HIGH POTENTIAL WITHSTANDING VOLTAGE: 400 VRMS AT 4 AND 7 MHZ

MECHANICAL:

ENGAGE/DISENGAGE FORCE: 8 LBS MAX ENGAGEMENT
1.4 LBS MIN DISENGAGEMENT
CONTACT RETENTION FORCE: 2.0 LBS MIN AXIAL FORCE
CONTACT RETENTION TORQUE: NOT APPLICABLE
COUPLING MECHANISM RETENTION: NOT APPLICABLE
CABLE ACCEPTABILITY: NOT APPLICABLE
CABLE HEX CRIMP SIZE: NOT APPLICABLE
CABLE RETENTION: NOT APPLICABLE
DURABILITY: 500 CYCLES MIN

ENVIRONMENTAL:

(MEETS OR EXCEEDS THE APPLICABLE PARAGRAPH OF MIL-C-39012)
THERMAL SHOCK: MIL-STD-202, METHOD 107, CONDITION C
EXCEPT -55 DEG C TO 155 DEG C
OPERATING TEMPERATURE: -55 DEG C TO 155 DEG C
CORROSION: MIL-STD-202, METHOD 101, CONDITION B
SHOCK: MIL-STD-202, METHOD 213, CONDITION B
VIBRATION: MIL-STD-202, METHOD 204, CONDITION D
MOISTURE: MIL-STD-202, METHOD 106

RECOMMENDED SOLDER LAND PATTERN *

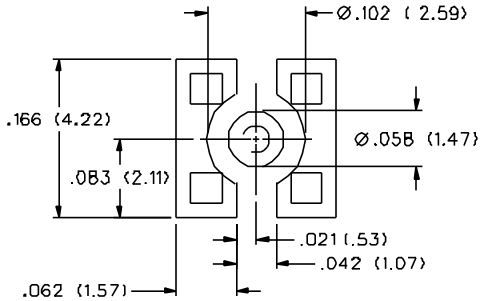

* NOTE: THIS PATTERN IS FOR REFERENCE ONLY. PATTERN MAY VARY DEPENDING ON ASSEMBLY PROCESS, BOARD TYPE, OR SPECIFIC ELECTRICAL OR MECHANICAL REQUIREMENTS.

DRAWING NO.
C - 135-3711-201/210

0	REVISIONS				
ENGINEERING RELEASE					
1	2-11-98	R H	S I	R	6-22-98 ECN 45300
CHANGED: .000+-.003 WAS .003 +-.003					
* REVISION NUMBER FOLLOWED BY AN ALPHA CHARACTER INDICATES DRAWING CLARIFICATION OR PART NUMBER ADDITION ONLY. *					
1a	4-21-99	R H	I	R	ECN 46289

CUSTOMER DRAWING

THIS DRAWING TO BE INTERPRETED PER ANSI Y 14.5M - 1982

"μSTATION"

COMPANY CONFIDENTIAL

TOLERANCE UNLESS OTHERWISE SPECIFIED		DRAWN BY SWC	DATE 12-29-98	JOHNSON a cinch connectivity solutions brand	Cinch Connectivity Solutions 299 Johnson Ave. Ste. 100 Waseca, MN 56093 1-800-247-8256
DECIMALS .XX	mm	CHECKED BY SWC	DATE 3-16-98	TITLE ASSEMBLY, VERTICAL SURFACE MOUNT JACK MMCX	
.XXX		APPROVED BY TAK	DATE 3-17-98		
MATL		APPROVED BY RJB	DATE 5-12-98	CODE NO.	DRAWING NO. C - 135-3711-201/210
FINISH		RELEASE DATE 6-22-98		SCALE 20:1	U/M INCH SHEET 2 OF 2