THIS DRAWING IS UNPUBLISHED. RELEASED FOR PUBLICATION -,- .
© COPYRIGHT - By - ALL RIGHTS RESERVED.

REVISIONS					
P	LTR	DESCRIPTION	DATE	DWN	APVD
	S	REVISED PER ECO-17-013723	21SEP2017	RS	MZ

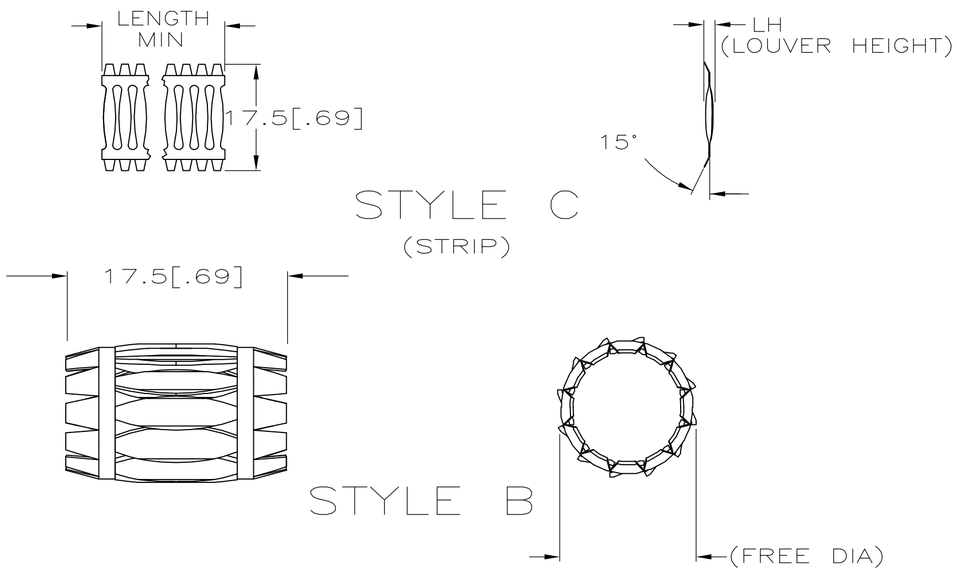

1. FINISH: GOLD PLATE 10uIN MINIMUM.
2. FINISH: SILVER PLATE 200 uIN MINIMUM.
3. FINISH: NICKEL PLATE 40 uIN MINIMUM.
4. FINISH: NICKEL PLATE 100 uIN MINIMUM.
5.
6.
7.
8. NESTED AND WELDED 13 AND 14 LOUVERED BAND.
9.
10.
11. PLATING NOTES ARE TO BE INTEREPRETED AS FOLLOWS: 6-8 AS 6 OVER 8.
12. PRODUCT IS SOLD BY THE FOOT. MINIMUM ORDER LENGTH IS 3 FEET.
13. PRELIMINRY PART NUMBER.
14. OBSOLETE PARTS: OBSOLETE CIS STREAMLINING PER D.RENAUD/D.SINISI

(FREE DIA)	STYLE	LH	MAT'L	MATING PIN Ø REF	LENGTH	PLATING	NUM LOUV	MAT'L THK	REF	PART NUMBER
14 OBSOLETE	[.72]	B	[.050]	BeCu	19.7[.775]		2-3	23	0.15[.006]	--	~~5-192007-1~~
OBSOLETE	[.72]	B	[.052]	BeCu	19.7[.775]		2-3	23	0.20[.008]	--	~~5-192007-0~~
OBSOLETE	-	C	[.052]	BeCu	-	NOTE 12	2-3	-	0.20[.008]	--	4-192007-9
OBSOLETE	[.50]	8 B	--	BeCu	12.7[.500]		PREPL	8 27	0.10[.004]	--	~~4-192007-8~~
OBSOLETE	[1.42]	B	[.048]	BeCu	38.1[1.500]		UNPL	45	0.08[.003]	--	~~4-192007-7~~
OBSOLETE	[1.04]	B	[.048]	BeCu	28.5[1.121]		UNPL	33	0.08[.003]	--	~~4-192007-6~~
OBSOLETE	[.82]	B	[.048]	BeCu	22.2[.875]		UNPL	26	0.08[.003]	--	~~4-192007-5~~
14 OBSOLETE	[1.42]	B	[.050]	BeCu	38.1[1.500]		2-3	45	0.15[.006]	--	~~4-192007-4~~
											~~4-192007-3~~
	[1.71]	B	[.050]	BeCu	44.4[1.750]		2-3	54	0.15[.006]	01305	~~4-192007-2~~
OBSOLETE	[1.42]	B	[.048]	BeCu	38.1[1.500]		2-3	45	0.08[.003]	01284	~~4-192007-1~~
OBSOLETE 14	[1.39]	B	[.050]	BeCu	34.9[1.375]		2-3	44	0.10[.004]	01307	~~4-192007-0~~
	[1.32]	B	[.052]	BeCu	34.9[1.375]		2-3	42	0.20[.008]	01196	~~3-192007-9~~
	[1.32]	B	[.050]	BeCu	34.9[1.375]		2-3	42	0.15[.006]	01309	~~3-192007-8~~
	[1.07]	B	[.050]	BeCu	28.6[1.129]		2-3	34	0.15[.006]	01301	~~3-192007-7~~
OBSOLETE	[1.04]	B	[.048]	BeCu	28.5[1.121]		2-3	33	0.08[.003]	01285	~~3-192007-6~~
14 OBSOLETE	[1.00]	B	[.050]	BeCu	27.1[1.068]		2-3	32	0.15[.006]	01263	~~3-192007-5~~
OBSOLETE										01187	~~3-192007-4~~
OBSOLETE										01201	~~3-192007-3~~
14	[.94]	B	[.052]	BeCu	25.4[1.000]		2-3	30	0.20[.008]	01178	~~3-192007-2~~
	[.94]	B	[.050]	BeCu	25.4[1.000]		2-3	30	0.15[.006]	01177	3-192007-1
OBSOLETE 14	[.94]	B	[.050]	BeCu	25.4[1.000]		UNPL	30	0.15[.006]	01240	~~3-192007-0~~
	[1.70]	B	[.050]	BeCu	22.2[.875]		2-3	26	0.15[.006]	01170	~~2-192007-9~~
	[.78]	B	[.050]	BeCu	22.2[.875]		2-3	25	0.15[.006]	01169	2-192007-8
	[.81]	B	[.050]	BeCu	22.2[.875]		2-3	26	0.10[.004]	01276	~~2-192007-7~~
OBSOLETE	[.81]	B	[.048]	BeCu	22.2[.875]		2-3	26	0.08[.003]	01302	~~2-192007-6~~
OBSOLETE	[.69]	B	[.052]	BeCu	19[.750]		2-3	22	0.20[.008]	01318	~~2-192007-5~~
OBSOLETE 14	[.65]	B	[.050]	BeCu	17.4[.687]		2-3	21	0.15[.006]	01150	~~2-192007-4~~
	[.56]	B	[.050]	BeCu	15.9[.625]		2-3	18	0.15[.006]	01298	~~2-192007-3~~
	[.53]	B	[.052]	BeCu	15.7[.620]		2-3	17	0.20[.008]	01313	~~2-192007-2~~
OBSOLETE										01146	~~2-192007-1~~
14 OBSOLETE	--	C	[.050]	BeCu	--	NOTE 12	1-3	--	0.15[.006]	--	~~2-192007-0~~
	[.53]	B	[.050]	BeCu	15.7[.620]		2-3	17	0.15[.006]	01145	1-192007-9
OBSOLETE 14	[.53]	B	[.050]	BeCu	15.7[.620]		UNPL	17	0.15[.006]	01241	~~1-192007-8~~
	[.50]	B	[.050]	BeCu	12.7[.500]		1-3	14	0.15[.006]	01290	~~1-192007-7~~
	[.50]	B	[.050]	BeCu	12.7[.500]		4	14	0.15[.006]	01291	~~1-192007-6~~
	[.50]	B	[.050]	BeCu	12.7[.500]		2-3	14	0.15[.006]	01138	~~1-192007-4~~
	[.50]	B	[.050]	BeCu	12.7[.500]		UNPL	14	0.15[.006]	01235	~~1-192007-3~~
	[.50]	B	[.046]	BeCu	12.7[.500]		UNPL	14	0.08[.003]	01296	~~1-192007-2~~
	[.43]	B	[.050]	BeCu	11.1[.437]		2-3	12	0.15[.006]	01133	~~1-192007-1~~
	[.34]	B	[.050]	BeCu	7.9[.312]		2-3	9	0.15[.006]	01115	~~1-192007-0~~
OBSOLETE	[.30]	B	[.050]	BeCu	7.9[.312]		2-3	8	0.15[.006]	01119	~~192007-9~~
14 OBSOLETE	--	C	[.050]	BeCu	--	4.90 IN	2-3	49	0.15[.006]	01038	~~192007-8~~
	--	C	[.050]	BeCu	--	NOTE 12	2-3	--	0.15[.006]	01010	192007-7
14 OBSOLETE	--	C	[.050]	BeCu	--	66 FT	UNPL	--	0.15[.006]	--	~~192007-6~~
OBSOLETE	--	C	[.050]	BeCu	--	66 FT	UNPL	--	0.15[.006]	01019	~~192007-5~~
OBSOLETE	--	C	[.050]	BeCu	--	66 FT	2-3	--	0.10[.004]	01016	~~192007-4~~
14 OBSOLETE	--	C	[.050]	BeCu	--	66 FT	UNPL	--	0.10[.004]	01018	~~192007-3~~
OBSOLETE	--	C	[.046]	BeCu	--	66 FT	2-3	--	0.08[.003]	01000	~~192007-2~~
OBSOLETE	--	C	[.046]	BeCu	--	NOTE 12	UNPL	--	0.08[.003]	01024	~~192007-1~~

192007

THIS DRAWING IS A CONTROLLED DOCUMENT.

DIMENSIONS: mm [INCHES]

TOLERANCES UNLESS OTHERWISE SPECIFIED:
0 PLC ± -
1 PLC ± -
2 PLC ± 0.5[.02]
3 PLC ± 0.25[.010]
4 PLC ± -
ANGLES ± -

MATERIAL: SEE TABLE
FINISH: SEE TABLE

DWN S.URICH 25JAN01
CHK G.STEINHAUER 25JAN01
APVD G.STEINHAUER 25JAN01
PRODUCT SPEC —
APPLICATION SPEC —
WEIGHT —

TE Connectivity

NAME: CONTACT BAND, MALE
—
—

SIZE A2 | CAGE CODE 00779 | DRAWING NO C-192007 | RESTRICTED TO —

CUSTOMER DRAWING | SCALE NTS | SHEET 1 OF 1 | REV S

1471-9 (1/15)