THIS DRAWING IS UNPUBLISHED. RELEASED FOR PUBLICATION –,– .
© COPYRIGHT – By – ALL RIGHTS RESERVED.

LOC	DIST
CM	00

REVISIONS

P	LTR	DESCRIPTION	DATE	DWN	APVD
	G1	REVISED PER ECO–11–004587	11MAR11	RK	HMR

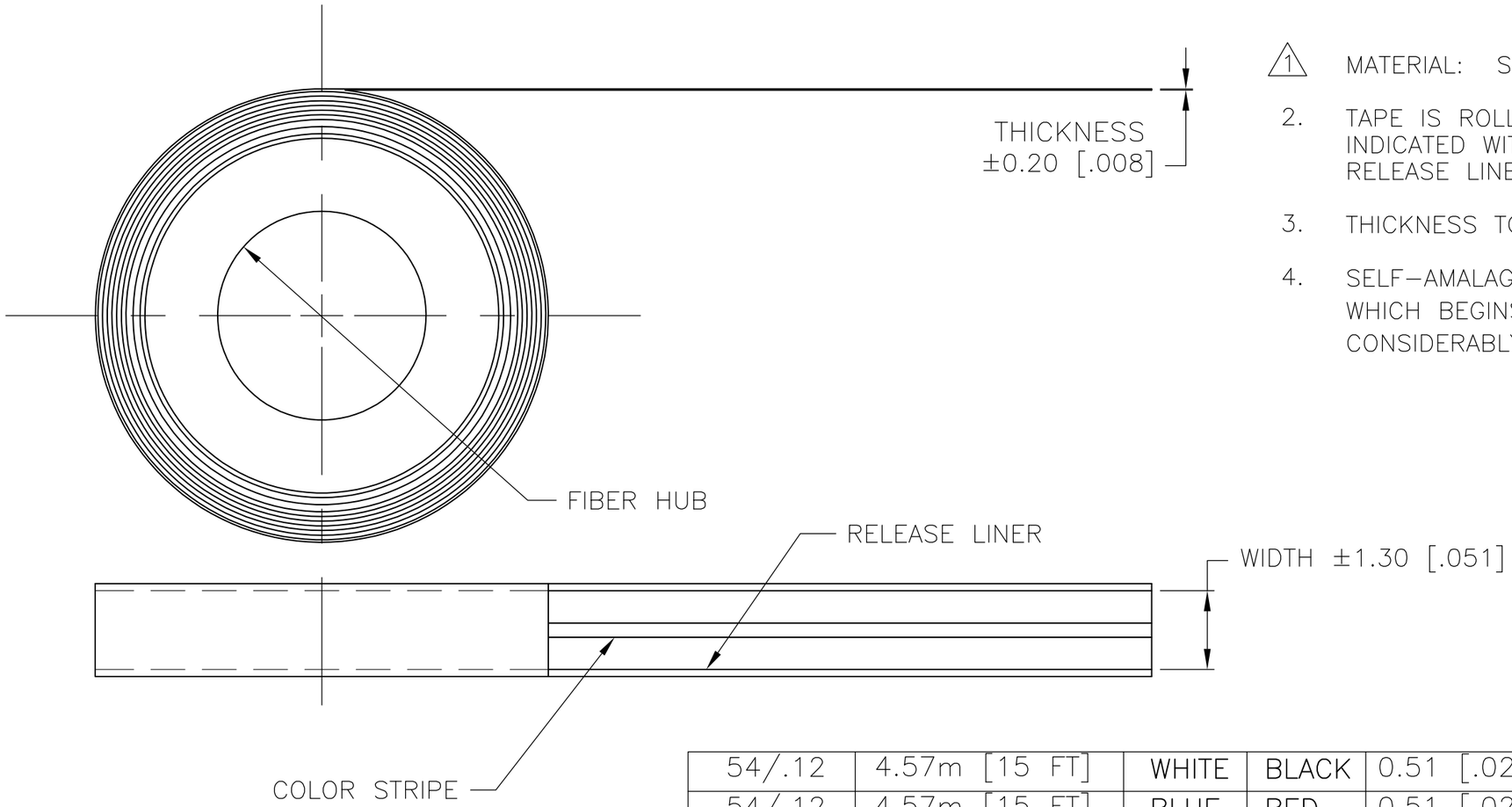

1. MATERIAL: SILICONE RUBBER.
2. TAPE IS ROLLED ONTO A FIBER HUB TO LENGTHS INDICATED WITH COLOR STRIPES DOWN AND RELEASE LINER ON OUTSIDE.
3. THICKNESS TO BE MEASURED AT CENTER OF TAPE.
4. SELF–AMALAGAMATING MATERIAL HAS A 1–YEAR SHELF–LIFE, WHICH BEGINS THE DAY ITS MADE. USE AFTER EXPIRATION CONSIDERABLY IMPEDES ITS ABILITY TO FUSE.

WEIGHT GRAMS/POUNDS	LENGTH MINIMUM	STRIPE COLOR	TAPE COLOR	THICKNESS	WIDTH	DESCRIPTIVE PART NO.	PART NUMBER
54/.12	4.57m [15 FT]	WHITE	BLACK	0.51 [.020]	25.4 [1.00]	ST1B215	1–608036–4
54/.12	4.57m [15 FT]	BLUE	RED	0.51 [.020]	25.4 [1.00]	ST1R215	1–608036–3
127/.28	10.97m[36 FT]	BLUE	CLEAR	0.51 [.020]	25.4 [1.00]	ST1C236	1–608036–2
576/1.27	10.97m[36 FT]	WHITE	RED	2.03 [.080]	38.1 [1.50]	ST12R836	608036–9
263/.58	10.97m[36 FT]	GREEN	RED	1.02 [.040]	31.8 [1.25]	ST14R436	608036–6
172/.38	10.97m[36 FT]	WHITE	GRAY	0.76 [.030]	25.4 [1.00]	ST1G336	608036–4
127/.28	10.97m[36 FT]	BLUE	GRAY	0.51 [.020]	25.4 [1.00]	ST1G236	608036–2
127/.28	10.97m[36 FT]	BLUE	RED	0.51 [.020]	25.4 [1.00]	ST1R236	608036–1

THIS DRAWING IS A CONTROLLED DOCUMENT.

DIMENSIONS: mm

TOLERANCES UNLESS OTHERWISE SPECIFIED:
0 PLC ±
1 PLC ±
2 PLC ±
3 PLC ±
4 PLC ±
ANGLES ±

MATERIAL 1

FINISH

DWN S. HOOVER 20–AUG–2002
CHK D. COLEY 20–AUG–2002
APVD D. COLEY 20–AUG–2002
PRODUCT SPEC
APPLICATION SPEC
WEIGHT

TE Connectivity

NAME: TAPE, SILICONE FUSION

SIZE	CAGE CODE	DRAWING NO	RESTRICTED TO
A3	00779	C–608036	—

CUSTOMER DRAWING | SCALE — | SHEET 1 OF 1 | REV G1