Honeywell

SMALL PRECISION LIMIT SWITCH

CATALOGUE LISTING

914CE SERIES

CHART MTG-CE-10

SWITCH TYPE	ISSUE	RELEASE NUMBER	OPTIONS	DIFF. TRAVEL (MAX.)	OPERATING FORCE (MAX) NEWTONS	OPERATING FORCE (MAX) GMF	RELEASE FORCE (MIN) NEWTONS	RELEASE FORCE (MIN) GMF	OPERATING POSITION	MAX FREE LENGTH
914CE1	5	MEC87/118	NONE, A, F, G, P, LI, V	0.1	11.8	1200	4.4	450	15.7±1.0	54
			C.	0.5						
914CE2 914CE3	5	MEC87/118	NONE, A, F, G, P, LI, V	0.1	11.8	1200	4.4	450	28.5±1.0	67
			C.	0.5						
			K.	0.1	22.5	2300				
914CE18	5	MEC87/118	NONE, A, F, G, P, LI, V	0.1	22.5	2300	4.4	450	24.9±1.0	63
			C.	0.5						
914CE19	6	MEC87/118	NONE, A, F, G, P, LI, V	0.1	17.5	1800	4.4	450	ADJUSTABLE 32 TO 39	77.4
			C.	0.5						
914CE22	6	MEC87/118	NONE, A, F, G, LI, V	0.1	11.8	1200	3	300	27.4 MAX	64.1
			C.	0.5						
914CE27	5	MEC87/118	NONE, A, F, G, LI, V	0.1	11.8	1200	4.4	450	29.3±1.0	67.2
			C.	0.5						
914CE28 914CE29	5	MEC87/118	NONE, A, F, G, LI, V	0.1	11.8	1200	4.4	450	42.5±1.0	81
			C.	0.5						
914CE31 914CE55	3	MS-11125	NONE, A, F, G, P, LI, V	0.1	22.5	2300	4.4	450	34.4±1.0	73
			C.	0.5						
914CE66	2	MEC87/118	NONE, A, F, G, P, LI, V	0.1	11.8	1200	4.4	450	24.4±1.0	63
			C.	0.5						

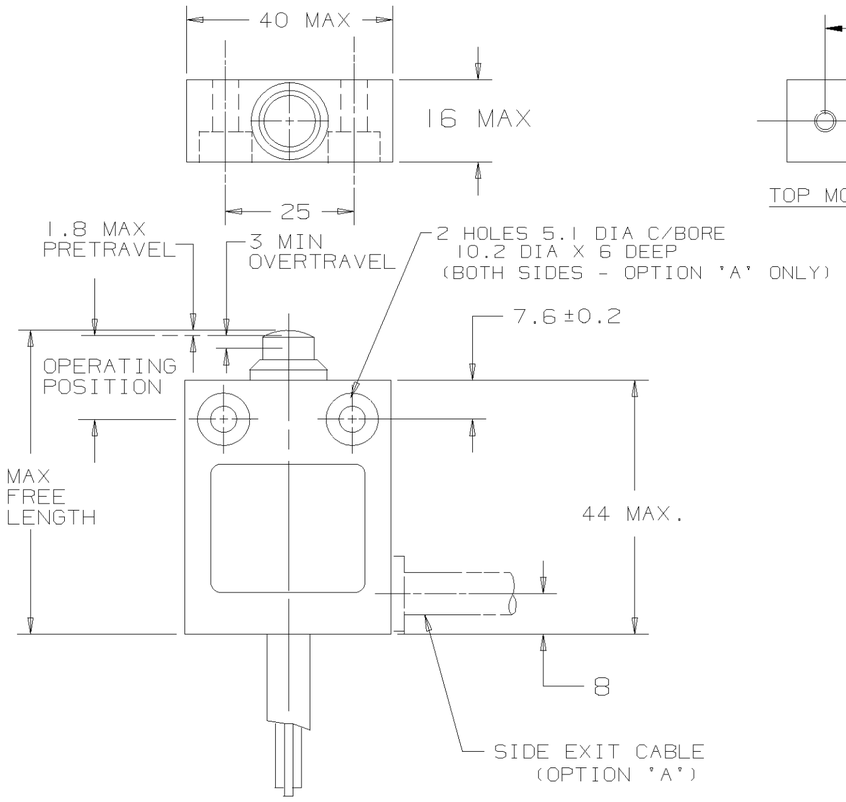

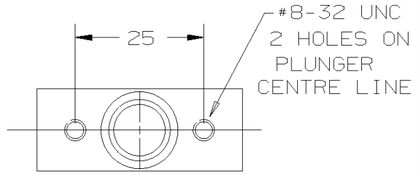

TOP MOUNTING-(OPTION 'P')

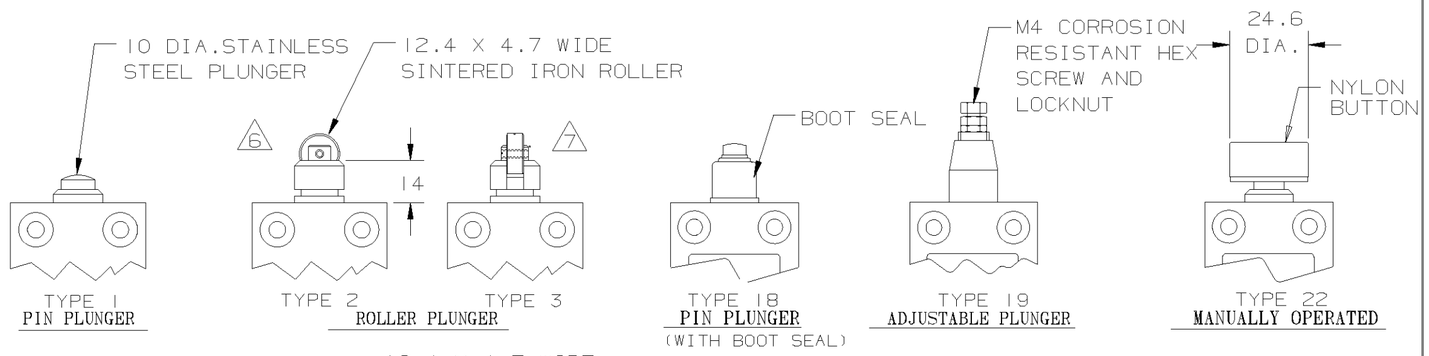

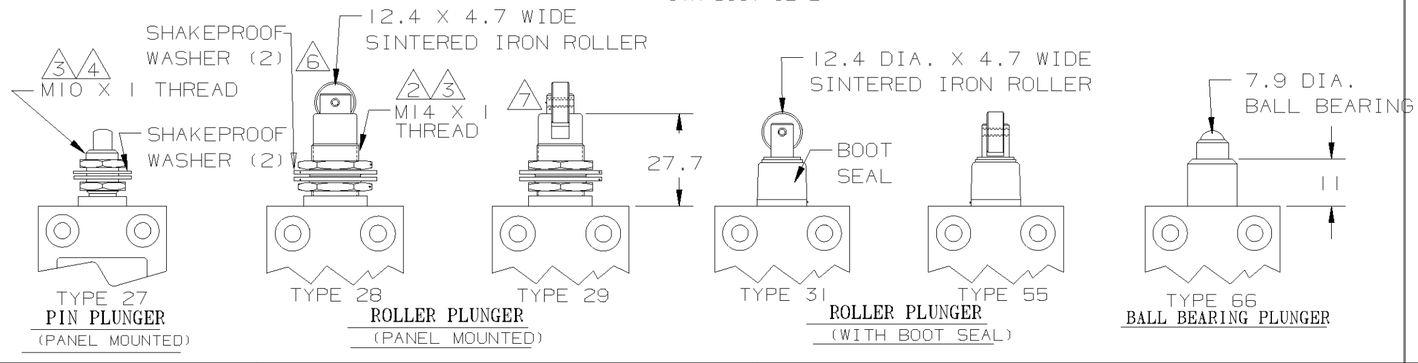

CATALOGUE LISTING CONVENTION

OPTIONS CAN BE COMBINED WITHIN LOGICAL LIMITS (EG 914CE2-3AK)

9 914CE [ ] – [ ] [ ]

ACTUATOR TYPE: 1, 2, 3, 18, 19, 22, 27, 28, 29, 31, 55 OR 66

CABLE LENGTH: LENGTH IN FEET

OPTIONS:
- A - SIDE ENTRY
- C - DOUBLE BREAK BASIC
- F - BIFURCATED GOLD CONTACTS
- G - GOLD CONTACTS
- K - 'O' RING SEALED PLUNGER
- P - TOP MOUNTING
- LI - LOW TEMP. (-40° C) CONSTRUCTION CABLE NOT SUITABLE FOR FLEXING
- V - 'VITON' SEALS

NOTES:-

1 : DIE CAST HOUSING FINISHED IN GREY PAINT
2 : SWITCH MOUNTS THROUGH A 14,5 DIA HOLE
3 : MAXIMUM PANEL THICKNESS = 4,2
4 : SWITCH MOUNTS THROUGH 10.5 DIA HOLE
5 : TEMPERATURE RANGE : 0°C TO +70°C (STANDARD)
6 : ROLLER PARALLEL WITHIN 3° TO MOUNTING FACE
7 : ROLLER PERPENDICULAR WITHIN 3° TO MOUNTING FACE
8 : LOW TEMP. RANGE : -40°C TO +70°C.
9 : ALL LOGICAL LISTINGS ARE IEC 947-5-1 APPROVED EXCEPT: OPTIONS C, F, G.

BASIC SWITCH	ELECTRICAL RATINGS		CIRCUIT DIAGRAM	CABLE
STANDARD SILVER CONTACTS	5A - 250VAC 1/10HP - 125/250VAC LR15775	IEC 947-5-1 EN60947-5-1 AC14 D300 DC13 R300	S.P.D.T. RED 2 BLACK 1 3 WHITE GREEN	4 X 18 A.W.G. SJTO (UL/CSA APPROVED)
BIFURCATED GOLD - OPTION 'F' OR GOLD CONTACTS - OPTION 'G'	1AVA@25 LR15775			
DOUBLE BREAK SILVER CONTACTS OPTION - 'C'	5A - 250VAC 1/10HP - 125/250VAC LR15775		2 1 RED WHITE BLACK BROWN 3 4 GREEN	5 CORE P.V.C. SHEATHED (UL LISTED)

THE COPYRIGHT OF THIS DRAWING IS THE PROPERTY OF HONEYWELL LTD. THE DRAWING IS SUPPLIED IN CONFIDENCE AND MUST NOT BE USED FOR ANY PURPOSE OTHER THAN THAT FOR WHICH IT IS SUPPLIED

THIRD ANGLE PROJECTION

PLOT SCALE 1/1

914 CE SERIES CHART MTG-CE-10

M

DRAWING NUMBER

ISSUE 8

RELEASE NUMBER MEC87/118 REPLACES

REVISIONS

3	MS11135	11/7/88 HW
4	CN14882	18/1/91 PC
5	2.4.93	MS-11818
6	29/9/94	MS11907
7	25/10/94	MS11985
8	23/08/95	CN-16516

CHECK

TRACED

DRAWN PC 10-11-87