Product NO.	Dim "L1"	Connector"A"	Connrctor "B"	Over mold "A" and "B"	SATA Cable	Solder
10115005-7SR470HLF	470±10	SATA 7P Receptacle connector Straight type	SATA 7P Receptacle connector Right-angle type	Heat resistant resin, Halogen Free, UL94V-0, Color Black	80℃ 30V AWG30 Halogen Free,VW-1, with F mark, Color Black	Sn96.5-Ag3.0-Cu0.5 Lead Free
10115005-7SR500HLF	500±10	Housing,Back Cover: Heat resistant resin, Halogen Free, UL94V-0, Color Black	Housing,Back Cover: Heat resistant resin, Halogen Free, UL94V-0, Color Black			
10115005-7SR540HLF	540±10	Contact: Copper Alloy	Contact: Copper Alloy			
10115005-7SR830HLF	830±10	Contact Area:Gold plating over Ni plating	Contact Area:Gold plating over Ni plating			
10115005-7SR910HLF	910±10					

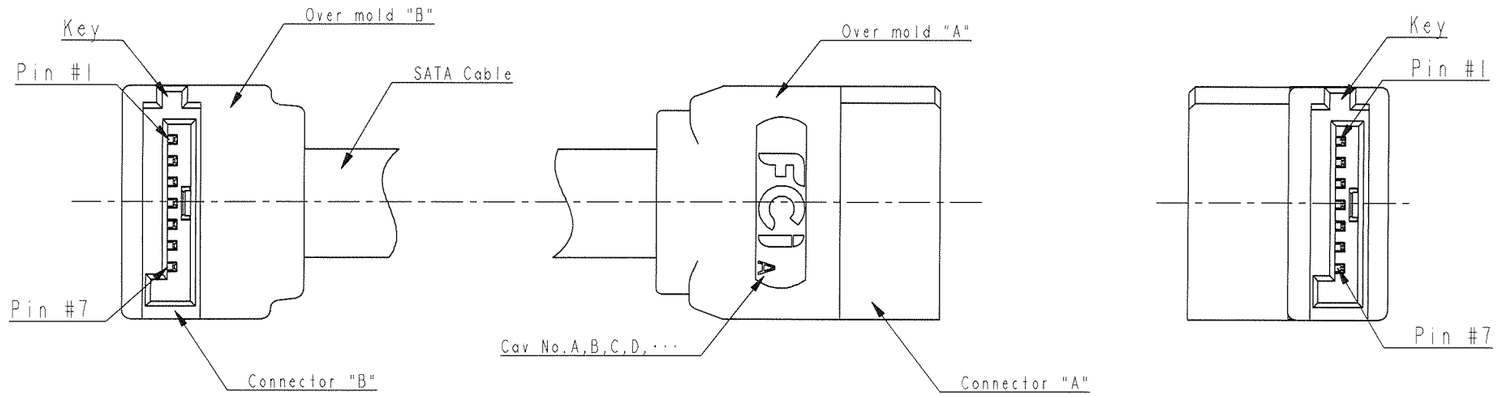

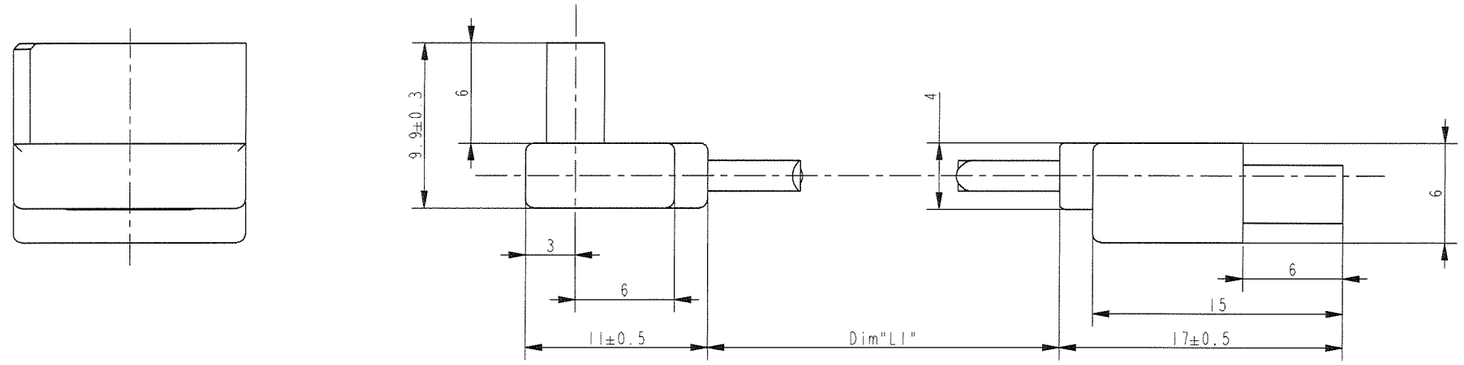

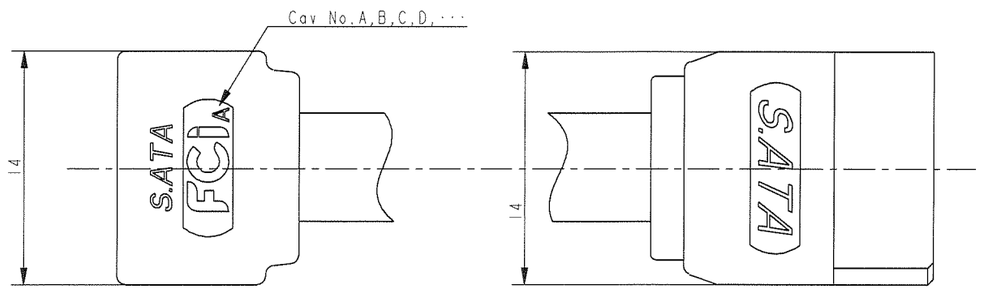

Wiring Table:

Pin Assigment

Connector"B" Type	Connector"B" Pin #	Key	Key	Connector"A" Pin #	Connector"A" Type
GND	#1			#1	GND
A+	#2			#2	A+
A-	#3			#3	A-
GND	#4			#4	GND
B-	#5			#5	B-
B+	#6			#6	B+
GND	#7			#7	GND

NOTE)

1)This product is based on Serial ATA Revision 2.6.
2)This product is manufactured by soldering process.
3)About the other Dim"L1" length, please inquire to sales person in our company.
4)Product SPEC:GS-12-672
5)Package SPEC:GS-14-1056
6)Application SPEC:GS-20-138
7)P/N composition

10115005 - 7 S R XXX H LF

- LF: Lead Free
- H: Halogen Free
- XXX: Cable Length:Dim "L1" (150 – 150±10mm) (285 – 285±10mm)
- R: SATA Connector Type (S:Straight,R:R/A)
- S: SATA Connector Type (S:Straight,R:R/A)
- 7: SATA Connector Position

rev	ecn no	dr	date
A	J10-0210	T.I	2010-10-14
-	-	-	-
-	-	-	-
-	-	-	-
-	-	-	-
-	-	-	-
-	-	-	-

www.fciconnect.com

surface ISO 1302 ✓ | tolerance std ISO 406 ISO 1101 | projection | MM

TOLERANCES UNLESS OTHERWISE SPECIFIED

Dr	T. Ishishita	2010-10-14	ANGULAR	LINEAR	0.X ±0.4
Eng	T. Ishishita	2010-10-14			0.XX ±0.4
Chr	Y. Kamada	2010-10-14	0° ±4°		0.XXX ±0.4
Appr	M. Ono	Oct 18/10			

size A2 | Scale N/A | ECN J10-0210 | Product family 233F | Spec ref

title: SATA 7P Signal Cable Harness
Straight/RightAngle LowPro type

dwg no 10115005 | Rev. A

catalog no | CUSTOMER | sheet 1 of 1

Copyright FCI.