THIS DRAWING AND THE INFORMATION SET FORTH HEREON ARE THE PROPERTY OF TYCO ELECTRONICS CORPORATION, AND ARE TO BE HELD IN TRUST AND CONFIDENCE. PUBLICATION, DUPLICATION, DISCLOSURE, OR USE FOR ANY PURPOSE NOT EXPRESSLY AUTHORIZED IN WRITING BY TYCO ELECTRONICS IS PROHIBITED.

If this document is printed it becomes uncontrolled. Check for the latest revision.

REVISIONS

LTR	DESCRIPTION	DATE	APPROVED
R	REVISED PER ECN# T-8354	06/17/87	Z. TEMAN
S	REVISED PER ECN# T-22011	12/16/98	M.HIGGY
T	REVISED PER DCR# D030457	10/31/03	M.HIGGY

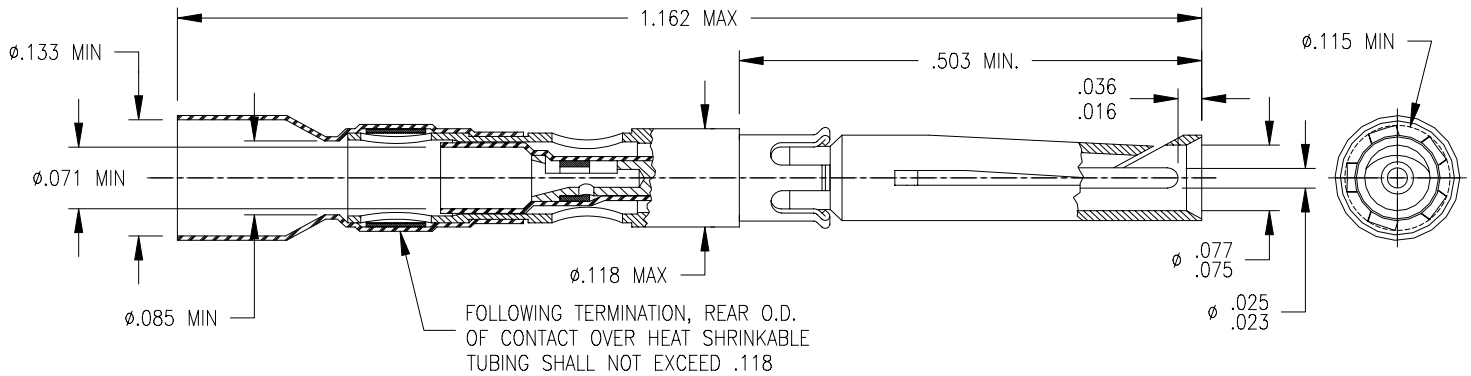

NOTES:
1. THIS CONTACT IS DESIGNED FOR USE IN MIL-DTL-28748, SIZE 16 CAVITIES.
2. THIS CONTACT IS DESIGNED TO TERMINATE TO THE CABLES LISTED IN THE TABLE. OTHER APPLICATIONS SHOULD BE SUBMITTED TO RAYCHEM FOR EVALUATION.
3. FOR TERMINATION PROCEDURE, SEE RAYCHEM SPECIFICATION ES 61133.
4. MATING CONTACT (FOR SIMILAR CABLES): D-602-44.
5. ALIGNMENT BUSHING CHA-0001 TO BE SUPPLIED WITH THE CONTACT.
6. CABLE MUST BE TERMINATED WITH D-600-0018 DIELECTRIC BARRIER.
7. THIS CONTACT MEETS RAYCHEM SPECIFICATION D-6002.

RG CABLE NO.	RAYCHEM CABLE NO.
RG 179 B/U	5026A 1X1X
RG 178 B/U 6	5030A 1X1X
RG 316 /U	7528A 1X1X
	7530A 1X1X
	9532A 1X1X

CONTACT CHARACTERISTICS:

MATERIALS:

1. OUTER BODY: COPPER ALLOY PER ASTM B196 OR B194.
   PLATING: GOLD PER ASTM B488 (MIL-G-45204), NICKEL PER AMS QQ-N-290, OVER COPPER FLASH.
2. INNER CONTACT: BRASS PER ASTM B16/B16M.
   PLATING: GOLD PER ASTM B488 (MIL-G-45204), NICKEL PER AMS QQ-N-290, OVER COPPER FLASH.
3. RETAINING CLIP: COPPER ALLOY PER ASTM B194.
   PLATING: NICKEL PER AMS QQ-N-290.
4. DIELECTRIC: ETFE FLUOROPOLYMER PER ASTM D3159.
5. SOLDER: SN63 PER ANSI/J-STD-006.
   FLUX: ROL1 PER ANSI/J-STD-004.
6. CABLE SUPPORT: HEAT-SHRINKABLE, RADIATION CROSS-LINKED POLYVINYLIDENE FLUORIDE.

PERFORMANCE:

TEMPERATURE RATING: 125°C MAXIMUM
CURRENT RATING: 3 AMPS
VOLTAGE RATING: DIELECTRIC WITHSTANDING VOLTAGE: 900 VOLTS RMS MAXIMUM.
CONTACT RESISTANCE: 10 MILLIOHMS MAXIMUM (INNER)
8 MILLIOHMS MAXIMUM (OUTER)
INSULATION RESISTANCE: 5,000 MEGAOHMS MINIMUM.
ENGAGEMENT FORCE: OUTER SOCKET: 20.0 OZ. MAXIMUM
SEPARATION FORCE: OUTER SOCKET: 2.0 OZ. MINIMUM

SPECIFICATION CONTROL DRAWING

UNLESS OTHERWISE SPECIFIED DIMENSIONS ARE IN INCHES. METRIC DIMENSIONS ARE IN BRACKETS.

DECIMALS
.XXX ± ———
.XX ± ———
ANGLES ———

WEIGHT

DRAWN	MFORONDA	09.17.03
CHECKED		
APPROVED	M.HIGGY	09.17.03
APPROVED		

CAD NAME: D030457.dwg

THIRD ANGLE PROJECTION

tyco Electronics

Tyco Electronics Corporation
300 Constitution Drive
Menlo Park, CA. 94025 U.S.A.

Raychem

TITLE
SHIELDED CONTACT, SOCKET COAXIAL CABLE

SIZE	CODE IDENT. NO.	DWG. NO.	REV
A	06090	D-602-45	T

DO NOT SCALE THIS DRAWING

SHEET 1 OF 1