THIS DRAWING IS UNPUBLISHED. RELEASED FOR PUBLICATION -,- .
© COPYRIGHT - BY TYCO ELECTRONICS CORPORATION. ALL RIGHTS RESERVED.

LOC	DIST
AD	00

REVISIONS

P	LTR	DESCRIPTION	DATE	DWN	APVD
	A	REV PER 0G3C-0113-05	29JUN05	RB	KD

1. RECEPTACLE ACCEPTS A .008–.014 THICK I.C. LEAD.
2. TUBE LOADED FOR AUTOMATIC INSERTION.
3. BECU CONTACT–PLATED WITH TWO .000030 MIN THK. GOLD STRIPES IN CONTACT AREA WITH TIN ON CONTACT LEGS, BALANCE OF CONTACT NICKEL PLATED.
4. PHOS. BRONZE CONTACT– PLATED WITH TWO .000015 MIN THK. GOLD STRIPES IN CONTACT AREA WITH TIN ON CONTACT LEGS, BALANCE OF CONTACT NICKEL PLATED.
5. MAXIMUM DIMENSION FOR I.C. SEATING PLANE.
6. HOUSING MATERIAL–GLASS FILLED THERMOPLASTIC, BLACK, 94V–0

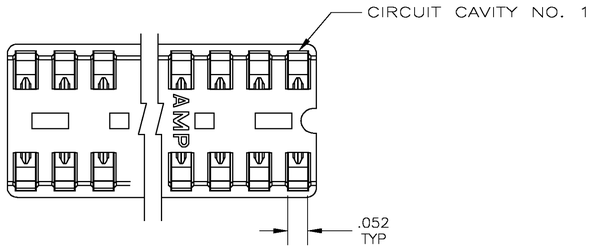

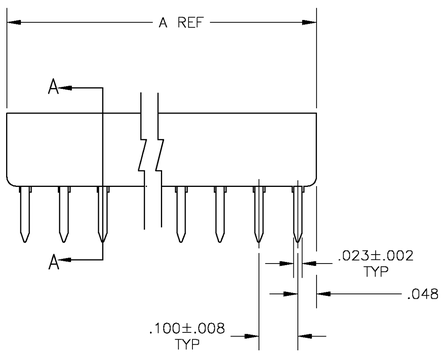

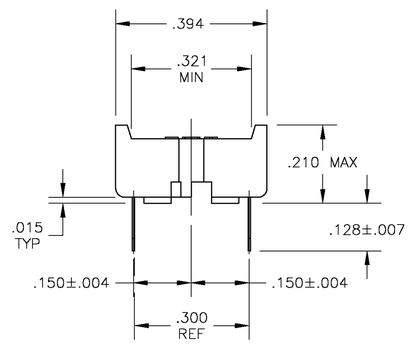

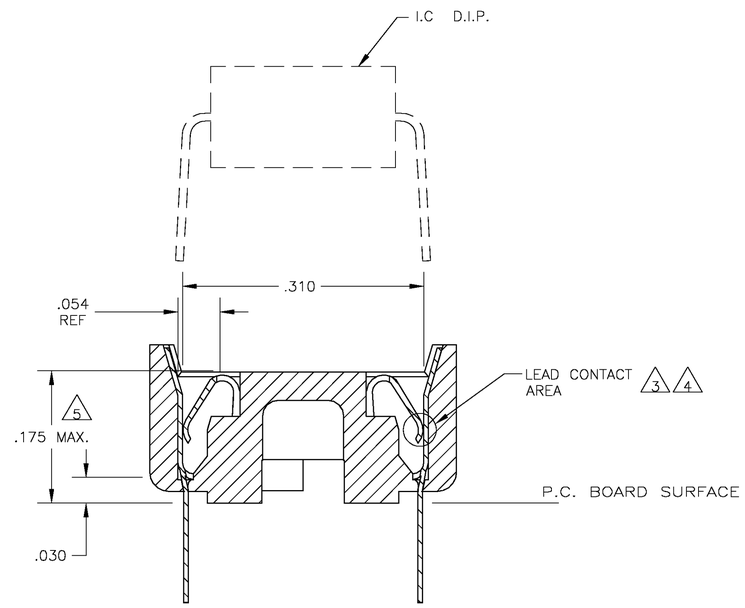

SECTION A–A
SCALE 10:1

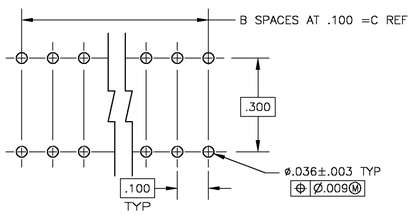

RECOMMENDED MOUNTING HOLE PATTERN
SCALE 4:1

CONTACT & FINISH	DIM C	B SPCS	DIM A	POSITION	PART NO.
3	.900	9	.995	20	1–1825093–6
3	.800	8	.895	18	1–1825093–5
3	.700	7	.795	16	1–1825093–4
3	.600	6	.695	14	1–1825093–3
3	.300	3	.395	8	1–1825093–2
3	.200	2	.295	6	1–1825093–1
4	.900	9	.995	20	1825093–6
4	.800	8	.895	18	1825093–5
4	.700	7	.795	16	1825093–4
4	.600	6	.695	14	1825093–3
4	.300	3	.395	8	1825093–2
4	.200	2	.295	6	1825093–1

THIS DRAWING IS A CONTROLLED DOCUMENT.

DIMENSIONS: INCHES

TOLERANCES UNLESS OTHERWISE SPECIFIED:
0 PLC ± –
1 PLC ± –
2 PLC ± –
3 PLC ± –
4 PLC ± –
ANGLES ± –

MATERIAL –
FINISH –

DWN 26APR2005 B.S.VISWESWARA
CHK – K.WRIGHT
APVD – –
PRODUCT SPEC –
APPLICATION SPEC –
WEIGHT –

tyco Electronics
Tyco Electronics Corporation
Harrisburg, Pa 17105–3608

NAME
DIP SOCKET ASSY, CLOSED, DIPLOMATE, .300 CL, LEAD FREE
–

SIZE	CAGE CODE	DRAWING NO	RESTRICTED TO
A1	00779	C–1825093	–

CUSTOMER DRAWING | SCALE 5:1 | SHEET 1 OF 1 | REV A