MICRO SWITCH
a Honeywell Division
FED. MFG. CODE 91929

SWITCH - ENCLOSED

CATALOG LISTING
18CX SERIES CHART 4

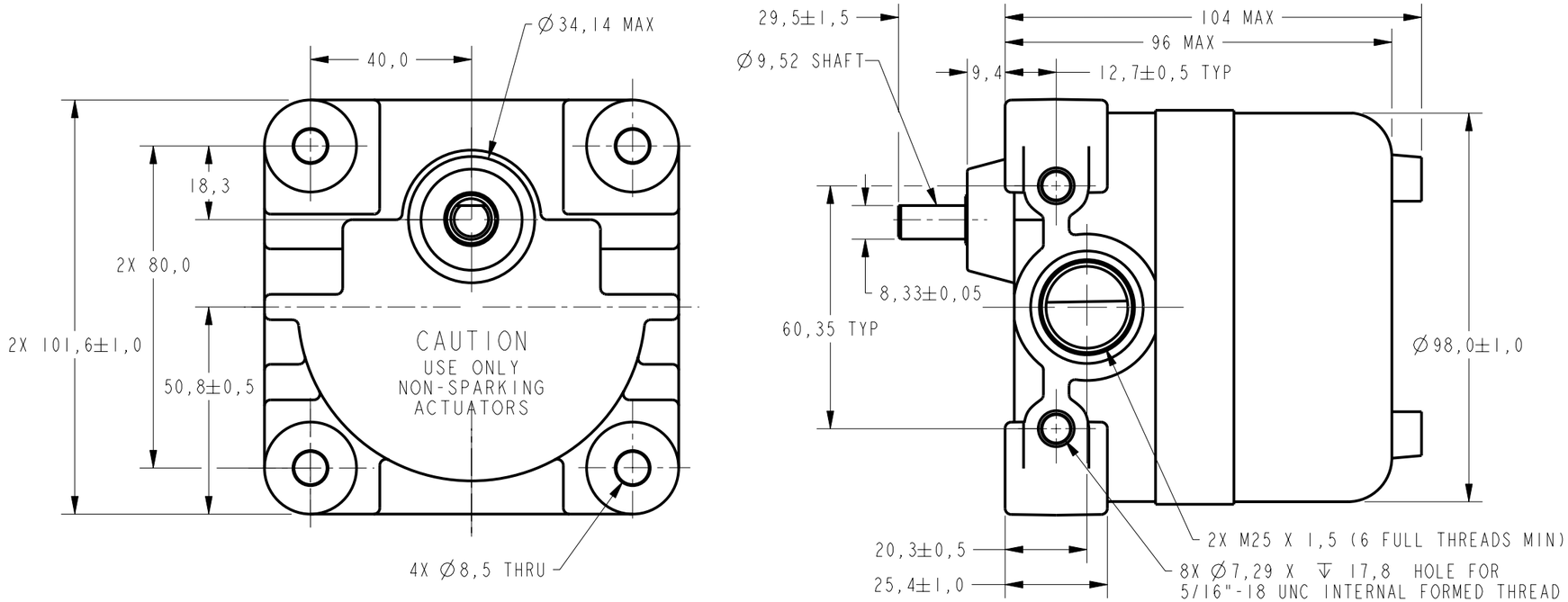

CONVERSION CHART	
7,29	.287
8,33±0,05	.328±.002
8,5	.33
9,4	.37
9,52	.375
12,7±0,5	.50±.02
17,8	.70
18,3	.72
20,3±0,5	.80±.02
25,4±1,0	1.000±.039
29,5±1,5	1.161±.059
34,14	1.344
40,0	1.57
50,8±0,5	2.00±.02
60,35	2.38
80,0	3.15
96,0	3.78
98,0±1,0	3.860±.039
101,6±1,0	4.000±.039
104,0	4.09
0,50 Nm	.369 PF
1.13 Kg	2.49 LB

NOTES
1 - EXPLOSION PROOF-AUSTRALIA APPROVAL Ex d IIC T6 CLASS I ZONE 1 DIP T6 CLASS II
2 - ALUMINUM ENCLOSURE FINISHED WITH BLUE AND BLACK EPOXY PAINT
3 - 4-20 ma ANALOGUE OUTPUT, ADJUSTABLE CW OR CCW FOR 15° TO 90° SPANS
4 - FOR USE IN TEMPERATURES UP TO 85°C
5 - UNIT PROVIDES NO SHAFT RESTORING FORCE, THE ACTUATING DEVICE MUST CONTROL MOVEMENT OF SHAFT

CAT LIST	DESCRIPTION	ELECTRICAL DATA
18CX10HM-D01	ANALOG OUTPUT ONLY	ANALOG OUTPUT: 4-20 ma VOLTAGE RANGE: 12.5 TO 40 VDC

THIS DRAWING COVERS A PROPRIETARY ITEM AND IS THE PROPERTY OF MICRO SWITCH. A DIVISION OF HONEYWELL. THIS DRAWING IS NOT TO BE COPIED OR USED WITHOUT THE APPROVAL OF MICRO SWITCH

THIRD ANGLE PROJECTION

SCALE 3/4 : 1

DO NOT SCALE PRINT

TOLERANCES
APPLY TO DESIGN UNITS. CONVERSIONS ARE ONLY FOR REFERENCE. UNLESS NOTED, TOLERANCES ARE ±

	DIM. mm	TOL mm/in	DIM. in	TOL mm/in
NO PLACES	X	1/.04		
ONE PLACE	X,X	0.4/.016	X.X	0.8/.03
TWO PLACES	X,XX	0.15/.006	X.XX	0.38/.015
THREE PLACES			X.XXX	0.13/.005
ANGLES				

DESIGN UNITS SI METRIC ☒ US CUSTOMARY ☐

WEIGHT 1,13 Kg APPROX

ANSI Y14.5M-1982 APPLIES

CHARACTERISTICS

OPERATING FORCE------ 0,50 Nm MAX

FULL OVERTRAVEL------ 90° MAX

ELECTRICAL DATA

CONTACT ARRANGEMENT

CATALOG LISTING 18CX SERIES CHART 4 PAGE 1 OF 1
RELEASE NO. 202425
REPLACES
ISSUE 1
CHECK
REVISIONS
CHECK
CHECK 21 FEB 01
SAV 21 FEB 01
CHECK
DRAWN C S L 21 FEB 01
PTC/CAD 2D

Mouser Electronics

Authorized Distributor

Click to View Pricing, Inventory, Delivery & Lifecycle Information:

Honeywell:

18CX10HM-D01 18CX10HM-D01E