THIS DRAWING IS UNPUBLISHED. RELEASED FOR PUBLICATION -,- .
© COPYRIGHT - BY TYCO ELECTRONICS CORPORATION. ALL RIGHTS RESERVED.

LOC	DIST
AD	00

REVISIONS

P	LTR	DESCRIPTION	DATE	DWN	APVD
	B	REVISED PER ECO-06-021628	16AOR07	DH	GG
	B1	REVISED PER ECO-09-024927	07NOV09	KK	AEG
	C	ECR-10-019054	15SEP10	DP	MQW

CONNECTOR ASSEMBLY EXAMPLARY LOADED (4)

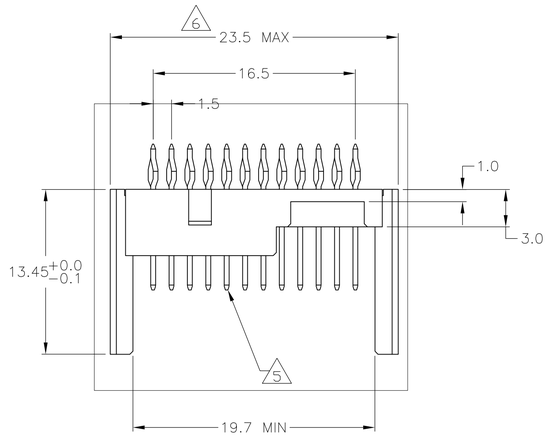

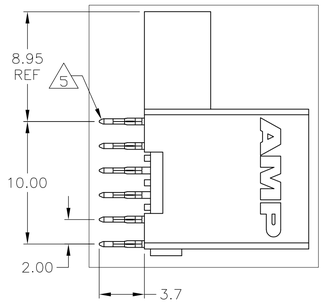

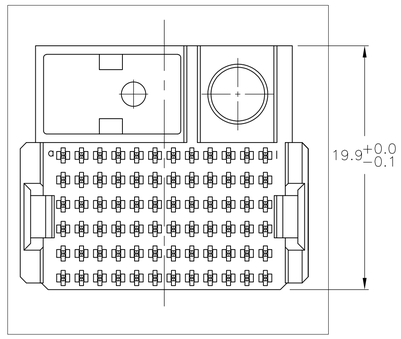

CONTACT DIMENSIONS

SCALE 5:1

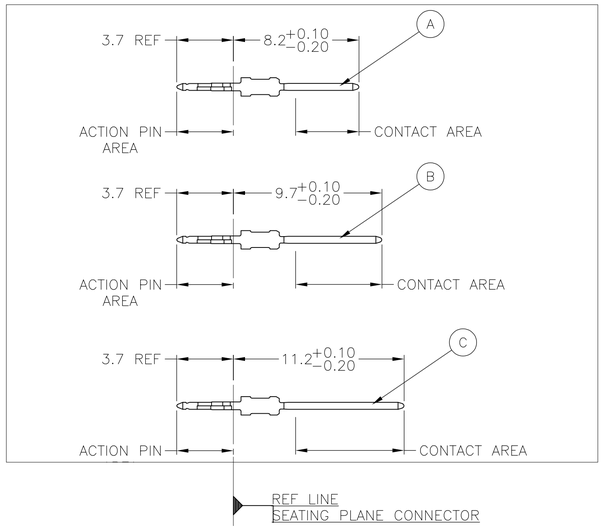

CONTACT LAYOUT

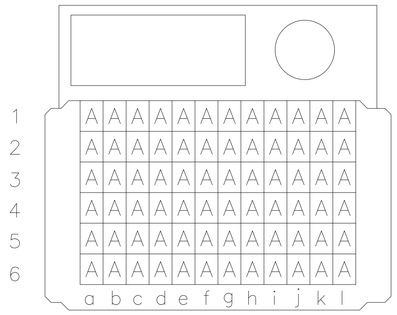

5120643-1 AS SHOWN

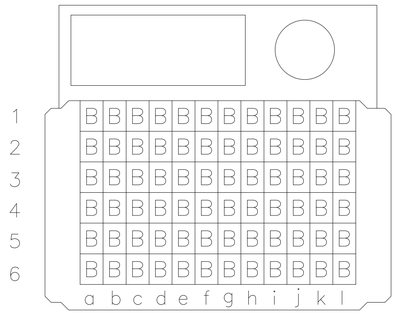

(10) ~~5120643-2~~ AS SHOWN

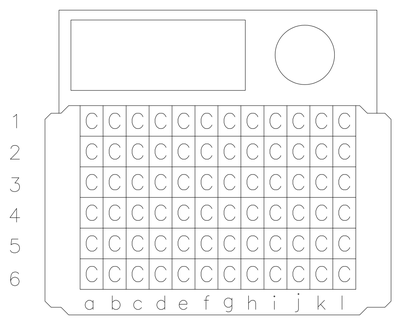

5120643-3 AS SHOWN

(1) CONFORMS TO ALL TESTING ACCORDING TO IEC 61076-4-101 PERFORMANCE LEVEL 2.

(2) MATERIAL:
CONTACT: PHOSPHOR BRONZE.
HOUSING: GLASS-FILLED POLYESTER.

(3) PLATED-THROUGH HOLES AT 2x2mm SQUARE GRID PATTERN DEFINED BY CONTACT LAYOUT.

(4) FOR ACTUAL PIN LOADING SEE "CONTACT LAYOUT".

(5) FOR ACTUAL PIN DIMENSIONS SEE "CONTACT DIMENSIONS".

(6) TO BE MEASURED AT BOTTOM OF SHROUD.

(7) GUIDE PIN HOLE DIAMETER CLEARANCE DEFINED BY CHOICE OF GUIDE PIN.

8. KEY AND ALIGNMENT PIN ASSEMBLED BY END USER AT APPLICATION.

(9) GENERAL PLATING SPECIFICATION: UNDERPLATING (ENTIRE CONTACT): 1.27µm MIN NICKEL AND ACTION PIN: 0.5µm MIN TIN.
FOR PLATING OF MATING SURFACES SEE APPLICABLE SPECIFICATION REFERENCE FOR EACH DASH NUMBER.

(10) OBSOLETE PARTS: OBSOLETE CIS STREAMLINING PER D.RENAUD/D.SINISI

RECOMMENDED PCB-HOLE LAYOUT COMPONENT SIDE SHOWN

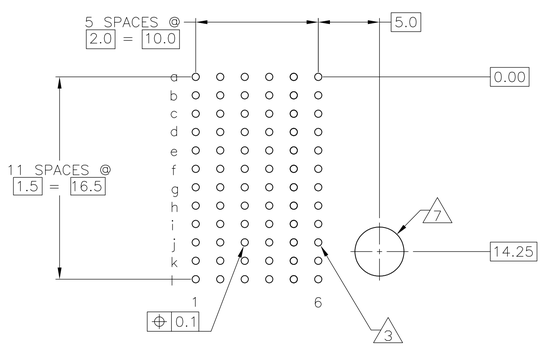

PLATED THRU HOLES PARAMETERS

REFERENCE APPLICATION SPECIFICATION

(10) OBSOLETE	5120643-3
	~~5120643-2~~
	5120643-1
	PART NUMBER

THIS DRAWING IS A CONTROLLED DOCUMENT.

DIMENSIONS: mm

TOLERANCES UNLESS OTHERWISE SPECIFIED: 0 PLC ± — ; 1 PLC ± 0.1 ; 2 PLC ± — ; 3 PLC ± — ; 4 PLC ± — ; ANGLES ± — ; ±0.2

MATERIAL (2)

FINISH (1) (9)

DWN	B.CARBO	02JUN05
CHK	G.SKIPPER	02JUN05
APVD	G.SKIPPER	02JUN05
PRODUCT SPEC	108-1738	
APPLICATION SPEC	114-1132	
WEIGHT	—	

CUSTOMER DRAWING

Tyco Electronics — Tyco Electronics Corporation, Harrisburg, PA 17105-3608

NAME: MALE ASSEMBLY, Z-PACK 2mm HM, RIGHT HAND, 12 ROW

SIZE	CAGE CODE	DRAWING NO	RESTRICTED TO
A1	00779	C-5120643	—

SCALE	SHEET	REV
4:1	1 OF 1	C