New

RoHS

Modular F.R.L. Units

Easy replacement of the element

The element and the bowl are in one piece.
Replacement can be done in hand.

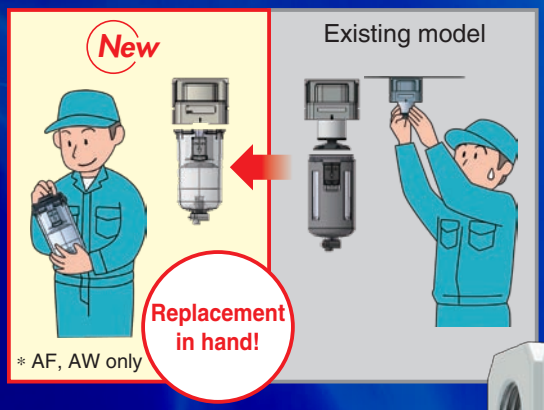

Energy saving regulator

Pressure drop: Max. 50% improvement

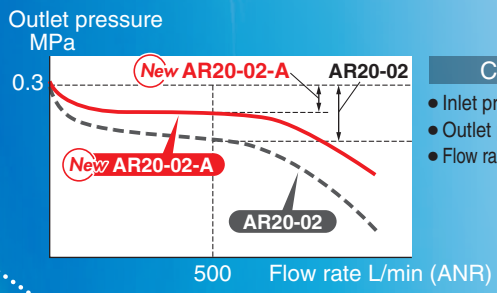

Conditions

- Inlet pressure: 0.5 MPa
- Outlet pressure: 0.3 MPa
- Flow rate: 500 L/min (ANR)

Reduced required maintenance space

* For AF40-A

Max. 46% reduction

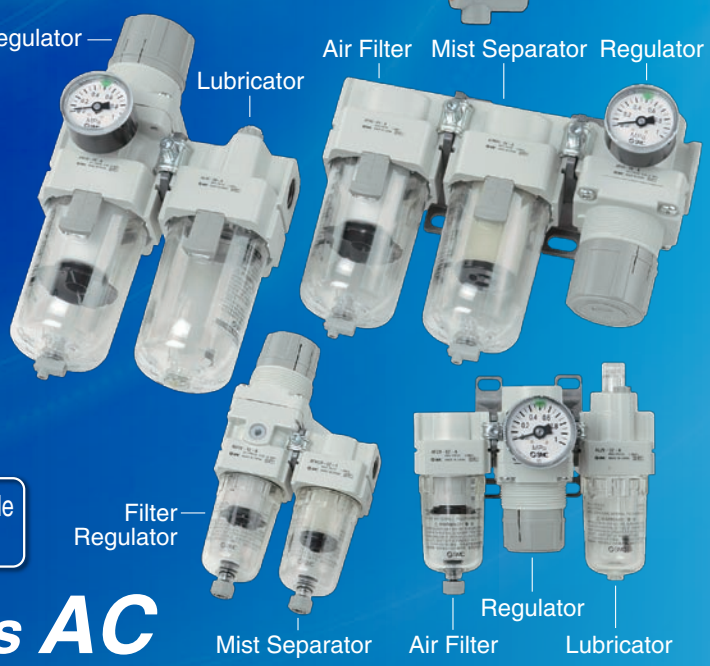

Interchangeable for mounting

Better visibility & safer

Double layer design

The bowl is covered with a transparent bowl guard!

- The inside is visible from 360°
- The bowl is completely protected from the environment. Safety improved.

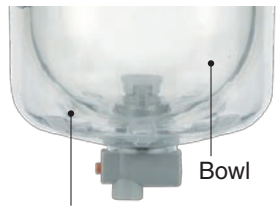

* Body size: 30 or more

Series AC

SMC

CAT.ES40-56A

Series AC

Transparent bowl guard

●Better visibility: 360°

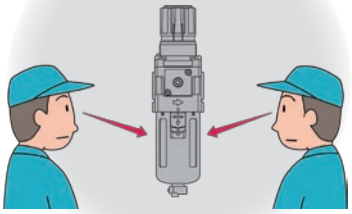

- Condensate can be monitored from anywhere.

●Light weight: Max. 90 g Reduction

∗ Except AW

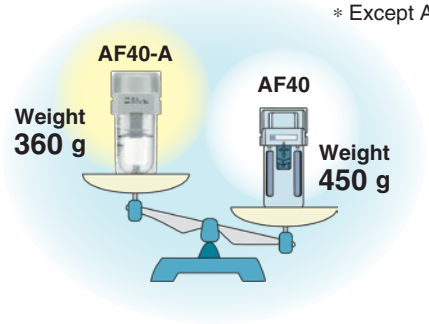

●Metal related corrosion does not occur.

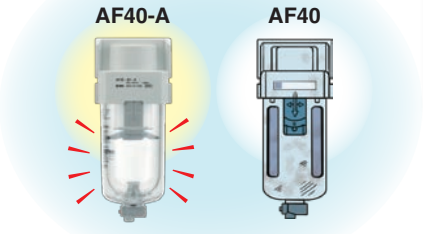

Resin body does not rust.

Applicable model

- Air Filter **AF**
- Mist Separator **AFM**
- Micro Mist Separator **AFD**
- Filter Regulator **AW**
- Lubricator **AL**

∗ Body size: 30 or more

Regulator: AR
Filter Regulator: AW

●Pressure drop: Max. 50% improvement

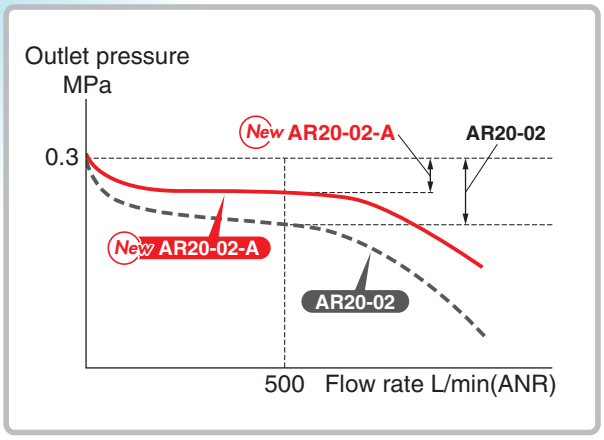

Conditions

◆Inlet pressure: 0.5 MPa ◆Outlet pressure: 0.3 MPa
◆Flow rate: 500 L/min (ANR)

New Spacer

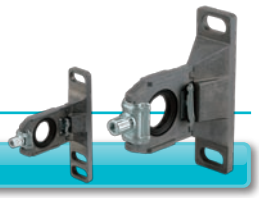

●Modular connection

Step①

- Mount the product by lining up the mating surface of the spacer with the new bracket.
- Insert the retainer into the spacer bolt and tighten the nut. (Temporary)

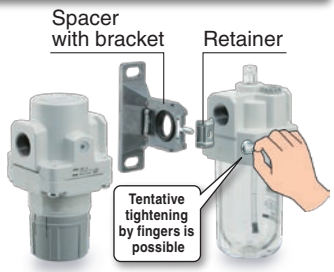

Step②

- Tighten the nut with the hexagon wrench.

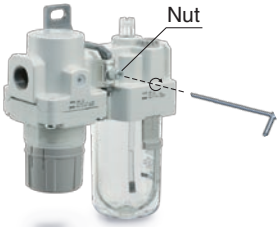

Interchangeable with existing products.

- New spacer can be connected to existing AF, AR, AL, AW series.
- Existing spacer cannot be used for new AR□-A, AF□-A, AL□-A, AW□-A series.

Series AC

Series Configuration

Product		Model	Port size 1/8	1/4	3/8	1/2	3/4	INDEX
Air Combination	Air Filter+Regulator+Lubricator **AF AR AL** 	**AC20-A**	●	●				**P.1**
		AC25-A		●	●			
		AC30-A		●	●			
		AC40-A		●	●	●		
		AC40-06-A					●	
	Filter Regulator+Lubricator **AW AL** 	**AC20A-A**	●	●				**P.7**
		AC30A-A		●	●			
		AC40A-A		●	●	●		
		AC40A-06-A					●	
	Air Filter + Regulator **AF AR** 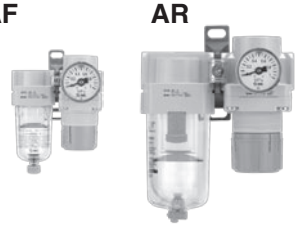	**AC20B-A**	●	●				**P.11**
		AC25B-A		●	●			
		AC30B-A		●	●			
		AC40B-A		●	●	●		
		AC40B-06-A					●	
	Air Filter+Mist Separator+Regulator **AF AFM AR** 	**AC20C-A**	●	●				**P.15**
		AC25C-A		●	●			
		AC30C-A		●	●			
		AC40C-A		●	●	●		
		AC40C-06-A					●	
	Filter Regulator+Mist Separator **AW AFM** 	**AC20D-A**	●	●				**P.19**
		AC30D-A		●	●			
		AC40D-A		●	●	●		
		AC40D-06-A					●	

Series Configuration

Product		Model	Port size					INDEX
			1/8	1/4	3/8	1/2	3/4	
Air Filter	AF	AF20-A	●	●				P.28
		AF30-A		●	●			
		AF40-A		●	●	●		
		AF40-06-A					●	
Mist Separator	AFM	AFM20-A	●	●				P.28
		AFM30-A		●	●			
		AFM40-A		●	●	●		
		AFM40-06-A					●	
Micro Mist Separator	AFD	AFD20-A	●	●				P.28
		AFD30-A		●	●			
		AFD40-A		●	●	●		
		AFD40-06-A					●	
Regulator	AR	AR20-A	●	●				P.44
		AR25-A		●	●			
		AR30-A		●	●			
		AR40-A		●	●	●		
		AR40-06-A					●	

Series Configuration

Product		Model	Port size 1/8	1/4	3/8	1/2	3/4	INDEX
Lubricator	AL	AL20-A	●	●				P.52
		AL30-A		●	●			
		AL40-A		●	●	●		
		AL40-06-A					●	
Filter Regulator	AW	AW20-A	●	●				P.58
		AW30-A		●	●			
		AW40-A		●	●	●		
		AW40-06-A					●	

Simple Specials System

A system designed to respond quickly and easily to your special ordering needs.

Simple Specials System

Short lead times

This system enables us to respond to your special needs, such as additional machining, accessory assembly, or modular unit, and deliver such special products as quickly as standard products.

Repeat orders

Once we receive a Simple Special part number from your previous order, we will process the order, manufacture the product, and deliver it to you.

Attachment List

Check valve Page 22

■A check valve with intermediate branch port can be easily installed to prevent a back-flow of lubricant when branching the air flow and releasing the air on the outlet side of the regulator.

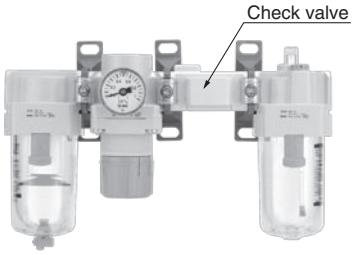

Applicable series
- Air Filter + Regulator + Lubricator (**AC□0-A**)
- Filter Regulator + Lubricator (**AC□0A-A**)
  ∗Port size: Except 06

Pressure switch Page 23

■A compact integrated pressure switch can be easily installed and facilitates the pressure detection of the line.

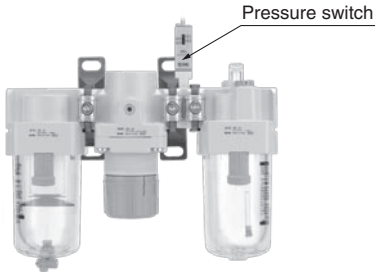

Applicable series
- Air Filter + Regulator + Lubricator (**AC□0-A**)
- Filter Regulator + Lubricator (**AC□0A-A**)
- Air Filter + Regulator (**AC□0B-A**)
- Air Filter + Mist Separator + Regulator (**AC□0C-A**)
- Filter Regulator + Mist Separator (**AC□0D-A**)

T-shaped spacer Page 23

■Using a T-shaped spacer facilitates the branching of air flow.

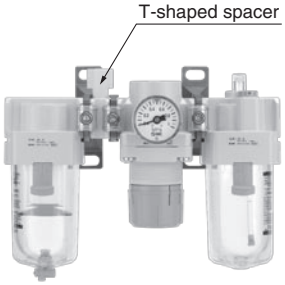

Applicable series
- Air Filter + Regulator + Lubricator (**AC□0-A**)
- Air Filter + Regulator (**AC□0B-A**)
- Air Filter + Mist Separator + Regulator (**AC□0C-A**)

3-port valve for residual pressure release Page 24

■With the use of a 3-port valve for residual pressure release, pressure left in the line can be easily exhausted.

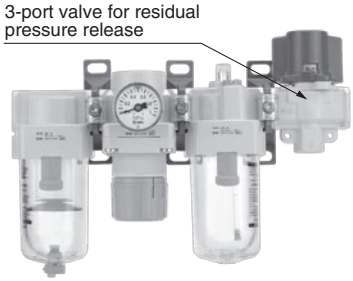

Applicable series
- Air Filter + Regulator + Lubricator (**AC□0-A**)
- Filter Regulator + Lubricator (**AC□0A-A**)
- Air Filter + Regulator (**AC□0B-A**)
- Air Filter + Mist Separator + Regulator (**AC□0C-A**)
- Filter Regulator + Mist Separator (**AC□0D-A**)

Cross spacer Page 24

■Pipings are possible in all 4 directions.

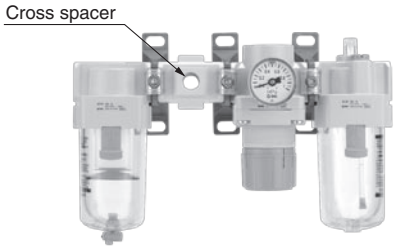

∗Needs to be ordered by single unit.

Piping adapter Page 25

■A piping adapter allows installation/removal of the component without removing the piping and thus makes maintenance easier.

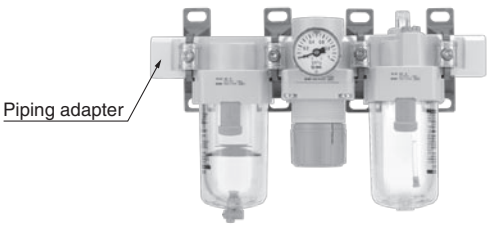

∗Needs to be ordered by single unit.

Attachment List

Pressure switch with piping adapter Page 25

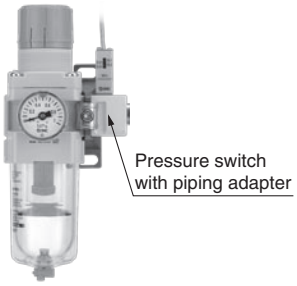

∗Needs to be ordered separately.

Spacer Page 26

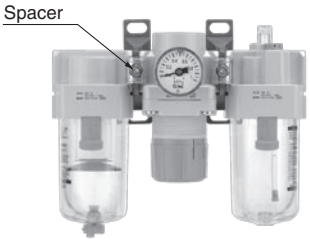

∗Needs to be ordered separately.

Related Products

Modular adapter

Easy modular connections for all equipment!

Example) Air filter + 2 port valve

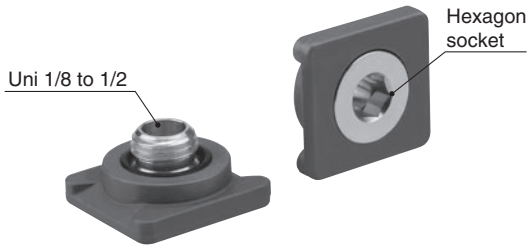

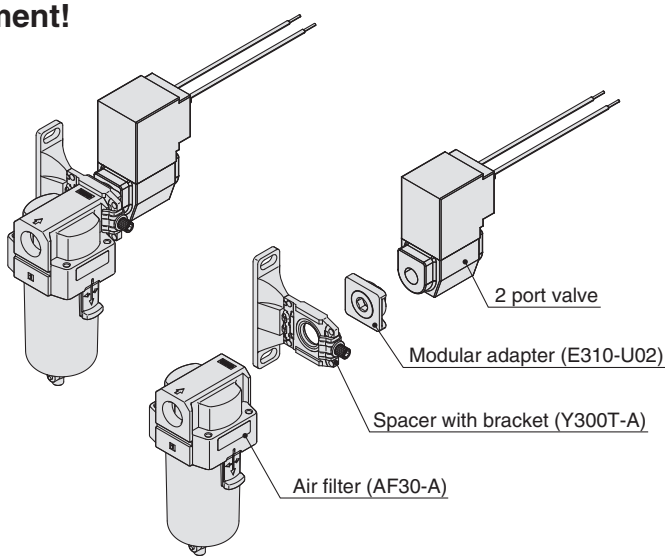

Air Combination

Air Filter + Regulator + Lubricator

AC20-A to AC40-A

JIS Symbol

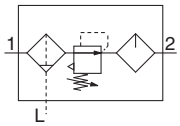

How to Order

AC 30 – ❷ 03 DG – ❺ – ❻ –A

❶ ❷ ❸ ❹ ❺ ❻

- Option/Semi-standard: Select one each for **a** to **m**.
- Option/Attachment/Semi-standard symbol: When more than one specification is required, indicate in alphanumeric order.

Example) AC30-F03DM-KSTV-13NR-A

			Symbol	Description	❶ Body size 20	25	30	40
❷	Thread type		Nil	Rc	●	●	●	●
			N	NPT	●	●	●	●
			F	G	●	●	●	●
			+					
❸	Port size		01	1/8	●	—	—	—
			02	1/4	●	●	●	●
			03	3/8	—	●	●	●
			04	1/2	—	—	—	●
			06	3/4	—	—	—	●
			+					
❹	Option Note 1)	a Float type auto drain	Nil	Without auto drain	●	●	●	●
			C Note 2)	N.C. (Normal close) Drain port is closed when pressure is not applied.	●	●	●	●
			D Note 3)	N.O. (Normal open) Drain port is open when pressure is not applied.	—	●	●	●
			+					
		b Pressure gauge Note 4)	Nil	Without pressure gauge	●	●	●	●
			G	Round type pressure gauge (with limit indicator)	●	●	●	●
			M	Round type pressure gauge (with color zone)	●	●	●	●
			+					
❺	Attachment	c Check valve	Nil	Without attachment	●	●	●	●
			K	Mounting position: AF+AR+**K**+AL	●	●	●	● Note 5)
			+					
		d Pressure switch	Nil	Without attachment	●	●	●	●
			S Note 6)	Mounting position: AF+AR+**S**+AL	●	●	●	●
			+					
		e T-interface	Nil	Without attachment	●	●	●	●
			T Note 6)	Mounting position: AF+**T**+AR+AL	●	●	●	●
			+					
		f 3-port valve for residual pressure release	Nil	Without attachment	●	●	●	●
			V	Mounting position: AF+AR+AL+**V**	●	●	●	●
			+					
❻	Semi-standard	g Set pressure Note 7)	Nil	0.05 to 0.7 MPa setting	●	●	●	●
			1	0.02 to 0.2 MPa setting	●	●	●	●
			+					
		h Bowl	Nil	Polycarbonate bowl	●	●	●	●
			C	With bowl guard	●	—	—	—

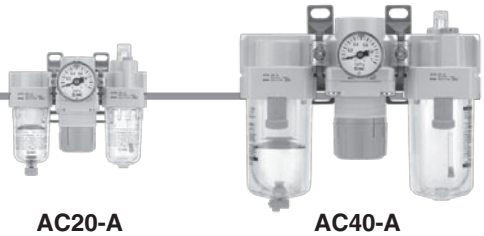

AC20-A AC40-A

			Symbol	Description	❶ Body size 20	25	30	40
❻ Semi-standard	i	Filter drain port	Nil	With drain cock	●	●	●	●
			J Note 8)	Drain guide 1/8	●	—	—	—
				Drain guide 1/4	—	●	●	●
			W	Drain cock with barb fitting (for ø6 x ø4 nylon tube)	—	●	●	●
			+					
	j	Lubricator lubricant exhaust port	Nil	Without drain cock	●	●	●	●
			3 Note 9)	Lubricator with drain cock	●	●	●	●
			+					
	k	Exhaust mechanism	Nil	Relieving type	●	●	●	●
			N	Non-relieving type	●	●	●	●
			+					
	l	Flow direction	Nil	Flow direction: Left to right	●	●	●	●
			R	Flow direction: Right to left	●	●	●	●
			+					
	m	Pressure unit	Nil	Name plate and pressure gauge in imperial units: MPa	●	●	●	●
			Z Note 10)	Name plate, caution plate for bowl, and pressure gauge in imperial units: psi, °F	○ Note 11)	○ Note 11)	○ Note 11)	○ Note 11)

Note 1) Option G, M are not assembled and supplied loose at the time of shipment.
Note 2) When pressure is not applied, condensate which does not start the auto drain mechanism will be left in the bowl. Releasing the residual condensate before ending operations for the day is recommended.
Note 3) If the compressor is small (0.75 kW, discharge flow is less than 100 L/min[ANR]), air leakage from the drain cock may occur during start of operations. N.C. type is recommended.
Note 4) When the pressure gauge is attached, a 1.0 MPa pressure gauge will be fitted for standard (0.7 MPa) type. 0.4 MPa pressure gauge for 0.2 MPa type.
Note 5) Not available with piping port size: 06.
Note 6) The bracket position varies depending on the T-shaped spacer or pressure switch mounting.
Note 7) Pressure can be set higher than the specification pressure in some cases, but use pressure within the specification range.
Note 8) Without a valve function.
Note 9) Filter drain port: When choosing with W, the drain cock of a lubricator will be with barb fittings.
Note 10) For thread type: NPT. This product is for overseas use only according to the new Measurement Law. (The SI unit type is provided for use in Japan.)
MPa and psi are shown together on the pressure unit.
Round pressure gauge (with color zone): Cannot be used with M. Available by request for special.
Note 11) ○: For thread type: NPT only.

Standard Specifications

Model		AC20-A	AC25-A	AC30-A	AC40-A	AC40-06-A
Component	Air filter	AF20-A	AF30-A	AF30-A	AF40-A	AF40-06-A
	Regulator	AR20-A	AR25-A	AR30-A	AR40-A	AR40-06-A
	Lubricator	AL20-A	AL30-A	AL30-A	AL40-A	AL40-06-A
Port size		1/8, 1/4	1/4, 3/8	1/4, 3/8	1/4, 3/8, 1/2	3/4
Pressure gauge port size		1/8				
Fluid		Air				
Ambient and fluid temperature		– 5 to 60°C (with no freezing)				
Proof pressure		1.5 MPa				
Max. operating pressure		1.0 MPa				
Set pressure range		0.05 to 0.7 MPa				
Nominal filtration rating		5 µm				
Recommended lubricant		Class 1 turbine oil (ISO VG32)				
Bowl material		Polycarbonate				
Bowl guard		Semi-standard (Steel)	Standard (Polycarbonate)			
Regulator construction		Relieving type				
Weight (kg)		0.39	0.67	0.82	1.26	1.43

Flow Characteristics (Representative values)

Condition: Inlet pressure 0.7 MPa

AC20-A

Rc 1/4

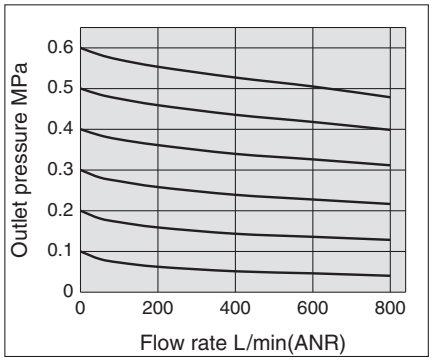

AC25-A

Rc 3/8

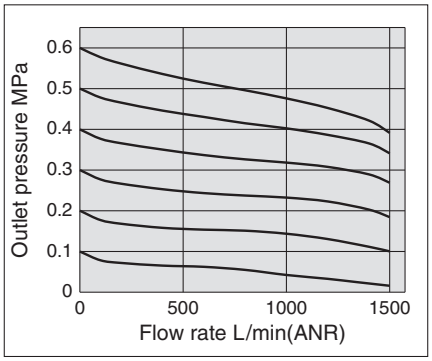

AC30-A

Rc 3/8

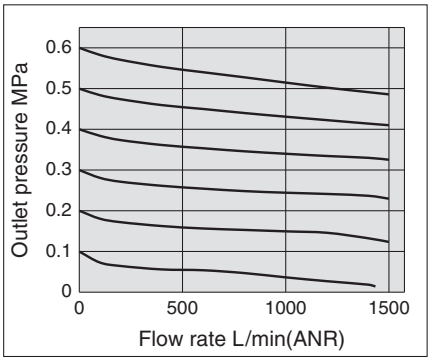

AC40-A

Rc 1/2

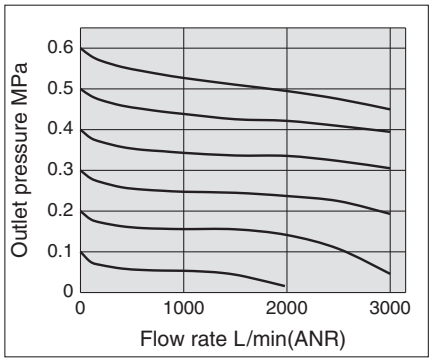

AC40-06-A

Rc 3/4

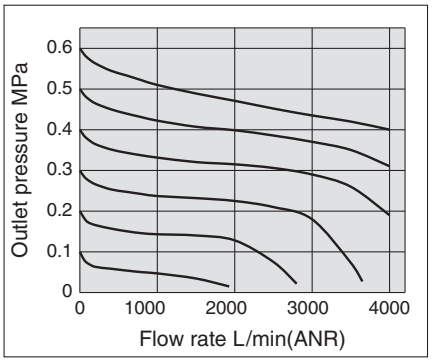

Pressure Characteristics (Representative values)

Conditions: Inlet pressure 0.7 MPa, Outlet pressure 0.2 MPa, Flow rate 20 L/min(ANR)

AC20-A

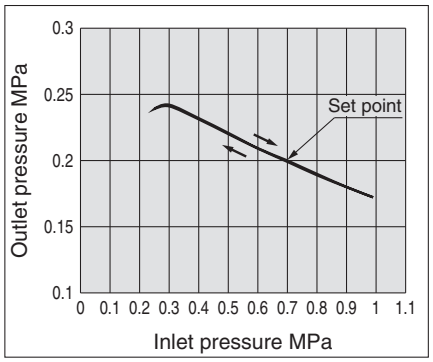

AC25-A

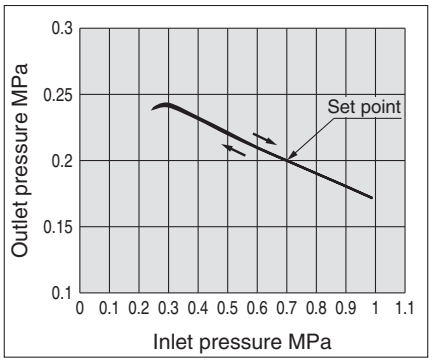

AC30-A

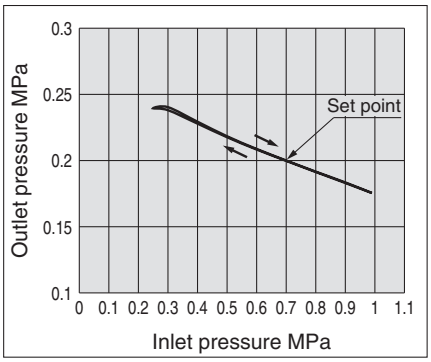

AC40-A/AC40-06-A

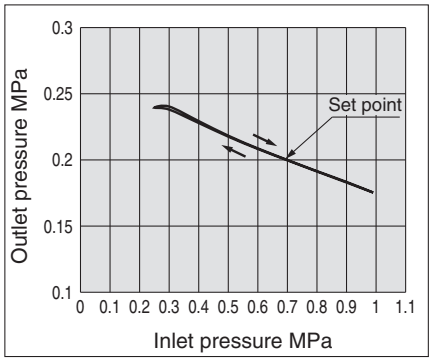

⚠ Specific Product Precautions

Be sure to read before handling. Refer to back cover for Safety Instructions, "Handling Precautions for SMC Products" (M-E03-3) and the Operation Manual for F.R.L. Precautions.
Please download it via our website, http://www.smcworld.com

Piping

⚠ Warning

1. When mounting a check valve, make sure the arrow (IN side) points in the correct direction of air flow.

Air Supply

⚠ Caution

1. Use an air filter with 5 μm or less filtration rating on the inlet side of the valve to avoid any damage to the seat caused by dust when mounting a 3-port valve for residual pressure release on the inlet side.

Mounting and Adjustment

⚠ Caution

1. When the bowl is installed on the air filter, filter regulator, lubricator, mist separator, or micro mist separator, install them so that the lock button lines up to the groove of the front (or the back) of the body to avoid drop or damage of the bowl.

Selection

⚠ Caution

1. When releasing air at the intermediate position using a T-shaped spacer on the inlet side of the lubricator, lubricant may back flow. Therefore, releasing air that does not contain traces of lubricant is not possible.
   To release air that does not contain traces of lubricant, use a check valve (Series AKM) on the inlet side of the lubricator to prevent a backflow of the lubricant.
2. If a residual pressure-release 3-port valve is mounted on the inlet side of the lubricator, causing a backflow of air, it can result in a backflow of oil or damage to internal parts. Please do not use it in this fashion.
3. An F.R.L. unit shipped from the plant has its model number labeled. However, components that are combined together during the distribution process do not have a label on them.

Dimensions

AC20-A

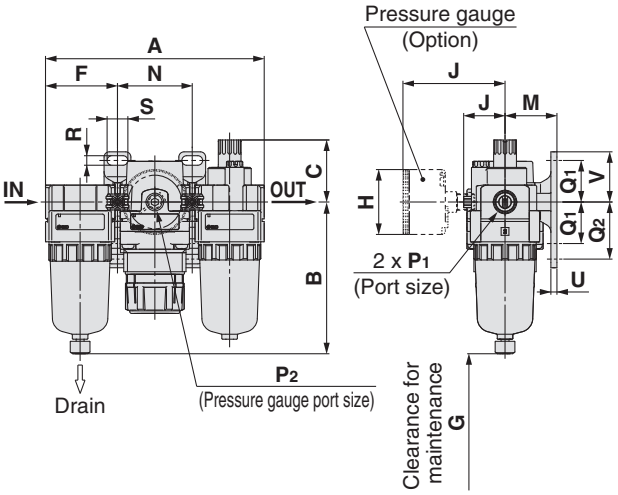

AC25-A to AC40-A

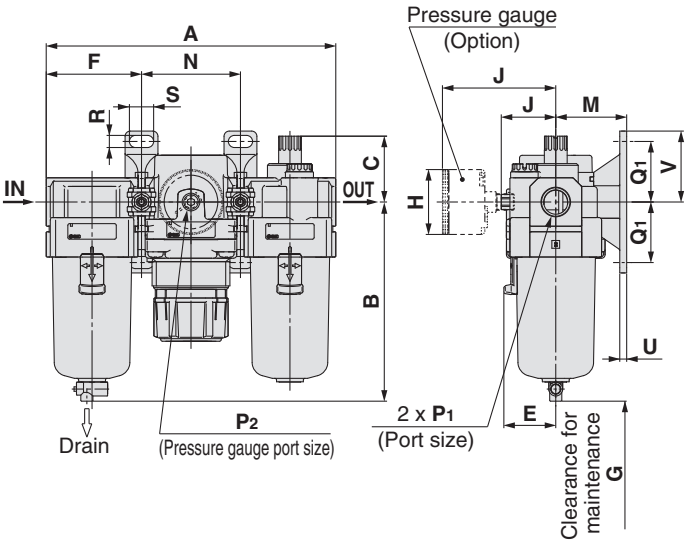

Applicable model	AC20-A		AC25-A to AC40-A		
Optional/Semi-standard specifications	With auto drain (N.C.)	With drain guide	With auto drain (N.O./N.C.)	With drain guide	Drain cock with barb fitting
Dimensions	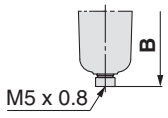	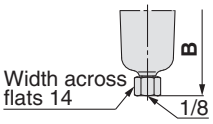	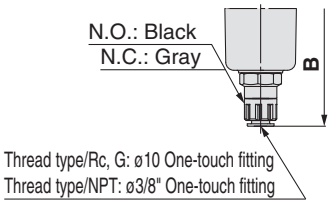	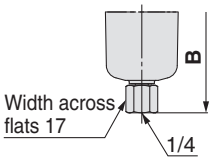	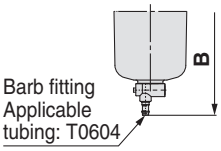

Model	Standard specifications																
	P_1	P_2	A	B	C	E	F	G	J	Bracket mount							
										M	N	Q_1	Q_2	R	S	U	V
AC20-A	1/8, 1/4	1/8	126.4	87.6	35.9	—	41.6	60	23.4	30	43.2	24	33	5.5	12	3.5	29
AC25-A	1/4, 3/8	1/8	167.4	115.1	38.1	30	55.1	80	30.5	41	57.2	35	—	7	14	4	41
AC30-A	1/4, 3/8	1/8	167.4	115.1	38.1	30	55.1	80	30.5	41	57.2	35	—	7	14	4	41
AC40-A	1/4, 3/8, 1/2	1/8	220.4	147.1	39.8	38.4	72.6	110	36.1	50	75.2	40	—	9	18	5	48
AC40-06-A	3/4	1/8	235.4	149.1	37.8	38.4	77.6	110	39.6	50	80.2	40	—	9	18	5	48

Model	Optional specifications					Semi-standard specifications	
	Round type pressure gauge		Round type pressure gauge (with color zone)		With auto drain	With barb fitting	With drain guide
	H	J	H	J	B	B	B
AC20-A	ø37.5	58.5	ø37.5	59.5	104.9	—	91.4
AC25-A	ø37.5	58.5	ø37.5	59.5	156.8	123.6	121.9
AC30-A	ø37.5	65	ø37.5	66	156.8	123.6	121.9
AC40-A	ø42.5	72	ø42.5	72	186.9	155.6	153.9
AC40-06-A	ø42.5	72	ø42.5	72	188.9	157.6	155.9

Air Combination

Filter Regulator + Lubricator

AC20A-A to AC40A-A

JIS Symbol

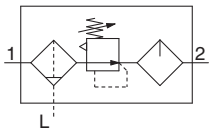

How to Order

AC 30 A– □ 03 DG – □ – □ –A

❶ ❷ ❸ ❹ ❺ ❻

- Option/Semi-standard: Select one each for **a** to **l**.
- Option/Attachment/Semi-standard symbol: When more than one specification is required, indicate in alphanumeric order.

Example) AC30A-F03DM-KSV-13NR-A

			Symbol	Description	❶ Body size 20	30	40
❷	Thread type		Nil	Rc	●	●	●
			N	NPT	●	●	●
			F	G	●	●	●
			+				
❸	Port size		01	1/8	●	—	—
			02	1/4	●	●	●
			03	3/8	—	●	●
			04	1/2	—	—	●
			06	3/4	—	—	●
			+				
❹	Option Note 1)	a Float type auto drain	Nil	Without auto drain	●	●	●
			C Note 2)	N.C. (Normal close) Drain port is closed when pressure is not applied.	●	●	●
			D Note 3)	N.O. (Normal open) Drain port is open when pressure is not applied.	—	●	●
			+				
		b Pressure gauge Note 4)	Nil	Without pressure gauge	●	●	●
			G	Round type pressure gauge (with limit indicator)	●	●	●
			M	Round type pressure gauge (with color zone)	●	●	●
			+				
❺	Attachment	c Check valve	Nil	Without attachment	●	●	●
			K	Mounting position: AW+**K**+AL	●	●	● Note 5)
			+				
		d Pressure switch	Nil	Without attachment	●	●	●
			S Note 6)	Mounting position: AW+**S**+AL	●	●	●
			+				
		e 3-port valve for residual pressure release	Nil	Without attachment	●	●	●
			V	Mounting position: AW+AL+**V**	●	●	●
			+				
❻	Semi-standard	f Set pressure Note 7)	Nil	0.05 to 0.7 MPa setting	●	●	●
			1	0.02 to 0.2 MPa setting	●	●	●
			+				
		g Bowl	Nil	Polycarbonate bowl	●	●	●
			C	With bowl guard	●	—	—
			+				
		h Filter regulator drain port	Nil	With drain cock	●	●	●
			J Note 8)	Drain guide 1/8	●	—	—
				Drain guide 1/4	—	●	●
			W	Drain cock with barb fitting (for ø6 x ø4 nylon tube)	—	●	●

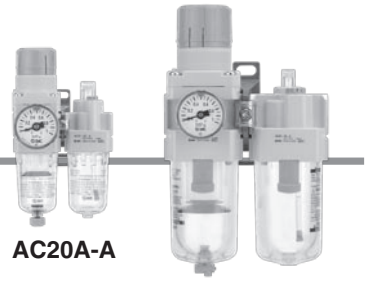

AC20A-A

AC40A-A

			Symbol	Description	❶ Body size 20	30	40
❻ Semi-standard	i	Lubricator lubricant exhaust port	Nil	Without drain cock	●	●	●
			3 Note 9)	Lubricator with drain cock	●	●	●
			+				
	j	Exhaust mechanism	Nil	Relieving type	●	●	●
			N	Non-relieving type	●	●	●
			+				
	k	Flow direction	Nil	Flow direction: Left to right	●	●	●
			R	Flow direction: Right to left	●	●	●
			+				
	l	Pressure unit	Nil	Name plate and pressure gauge in imperial units: MPa	●	●	●
			Z Note 10)	Name plate, caution plate for bowl, and pressure gauge in imperial units: psi, °F	○ Note 11)	○ Note 11)	○ Note 11)

Note 1) Option G, M are not assembled and supplied loose at the time of shipment.
Note 2) When pressure is not applied, condensate which does not start the auto drain mechanism will be left in the bowl. Releasing the residual condensate before ending operations for the day is recommended.
Note 3) If the compressor is small (0.75 kW, discharge flow is less than 100 L/min[ANR]), air leakage from the drain cock may occur during start of operations. N.C. type is recommended.
Note 4) When the pressure gauge is attached, a 1.0 MPa pressure gauge will be fitted for standard (0.7 MPa) type. 0.4 MPa pressure gauge for 0.2 MPa type.
Note 5) Not available with piping port size: 06.
Note 6) The bracket position varies depending on the pressure switch mounting.
Note 7) Pressure can be set higher than the specification pressure in some cases, but use pressure within the specification range.
Note 8) Without a valve function
Note 9) When selected with the filter regulator drain outlet W, the drain cock of the lubricator is barb fitting.
Note 10) For thread type: NPT. This product is for overseas use only according to the new Measurement Law. (The SI unit type is provided for use in Japan.)
MPa and psi are shown together on the pressure unit.
Round pressure gauge (with color zone): Cannot be used with M. Available by request for special.
Note 11) ○: For thread type: NPT only

Standard Specifications

Model		AC20A-A	AC30A-A	AC40A-A	AC40A-06-A
Component	Filter regulator	AW20-A	AW30-A	AW40-A	AW40-06-A
	Lubricator	AL20-A	AL30-A	AL40-A	AL40-06-A
Port size		1/8, 1/4	1/4, 3/8	1/4, 3/8, 1/2	3/4
Pressure gauge port size		1/8			
Fluid		Air			
Ambient and fluid temperature		– 5 to 60°C (with no freezing)			
Proof pressure		1.5 MPa			
Maximum operating pressure		1.0 MPa			
Set pressure range		0.05 to 0.7 MPa			
Nominal filtration rating		5 μm			
Recommended lubricant		Class 1 turbine oil (ISO VG32)			
Bowl material		Polycarbonate			
Bowl guard		Semi-standard (Steel)	Standard (Polycarbonate)		
Regulator construction		Relieving type			
Weight (kg)		0.33	0.66	1.22	1.34

Dimensions

AC20A-A

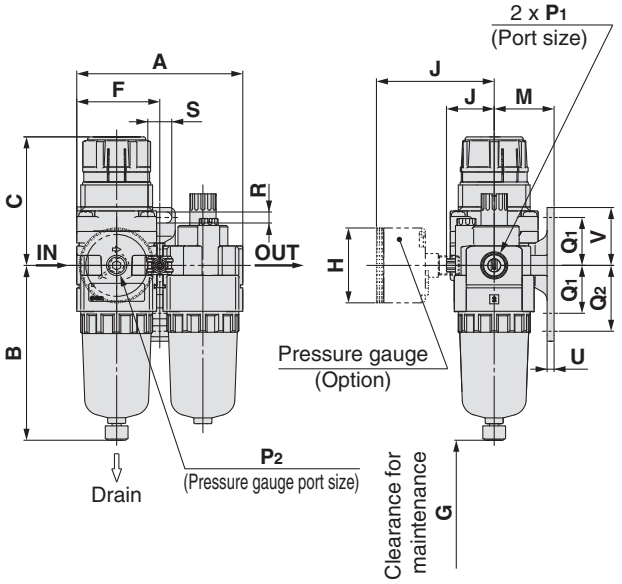

AC30A-A, AC40A-A

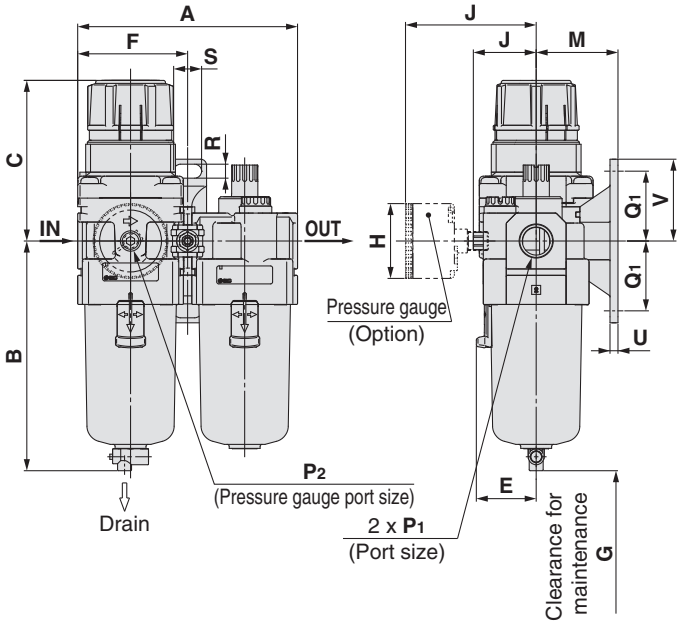

Applicable model	AC20A-A		AC30A-A, AC40A-A		
Optional/Semi-standard specifications	With auto drain (N.C.)	With drain guide	With auto drain (N.O./N.C.)	With drain guide	Drain cock with barb fitting
Dimensions	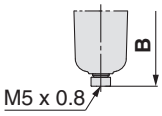	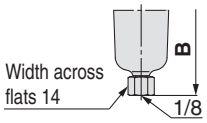	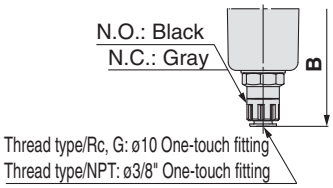	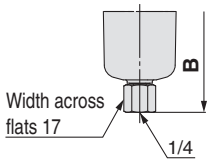	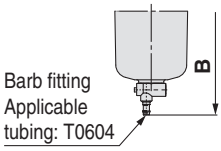

Model	Standard specifications															
	P_1	P_2	A	B	C Note)	E	F	G	J	Bracket mount						
										M	Q_1	Q_2	R	S	U	V
AC20A-A	1/8, 1/4	1/8	83.2	87.6	67.4	—	41.6	60	23.4	30	24	33	5.5	12	3.5	29
AC30A-A	1/4, 3/8	1/8	110.2	115.1	83.5	30	55.1	80	30.5	41	35	—	7	14	4	41
AC40A-A	1/4, 3/8, 1/2	1/8	145.2	147.1	100	38.4	72.6	110	36.1	50	40	—	9	18	5	48
AC40A-06-A	3/4	1/8	155.2	149.1	101.5	38.4	77.6	110	39.6	50	40	—	9	18	5	48

Model	Optional specifications					Semi-standard specifications	
	Round type pressure gauge		Round type pressure gauge (with color zone)		With auto drain	With barb fitting	With drain guide
	H	J	H	J	B	B	B
AC20A-A	ø37.5	58.5	ø37.5	59.5	104.9	—	91.4
AC30A-A	ø37.5	65	ø37.5	66	156.8	123.6	121.9
AC40A-A	ø42.5	72	ø42.5	72	186.9	155.6	153.9
AC40A-06-A	ø42.5	72	ø42.5	72	188.9	157.6	155.9

Note) The total length of C dimension is the length when the filter regulator knob is unlocked.

Air Combination

Air Filter + Regulator

AC20B-A to AC40B-A

JIS Symbol

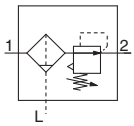

How to Order

AC 30 B– ☐ 03 DG – ☐ – ☐ –A

❶ ❷ ❸ ❹ ❺ ❻

- Option/Semi-standard: Select one each for **a** to **j**.
- Option/Attachment/Semi-standard symbol: When more than one specification is required, indicate in alphanumeric order.
  Example) AC30B-F03DM-SV-1NR-A

			Symbol	Description	❶ Body size 20	25	30	40
❷	Thread type		Nil	Rc	●	●	●	●
			N	NPT	●	●	●	●
			F	G	●	●	●	●
			+					
❸	Port size		01	1/8	●	—	—	—
			02	1/4	●	●	●	●
			03	3/8	—	●	●	●
			04	1/2	—	—	—	●
			06	3/4	—	—	—	●
			+					
❹	Option Note 1)	a Float type auto drain	Nil	Without auto drain	●	●	●	●
			C Note 2)	N.C. (Normal close) Drain port is closed when pressure is not applied.	●	●	●	●
			D Note 3)	N.O. (Normal open) Drain port is open when pressure is not applied.	—	●	●	●
			+					
		b Pressure gauge Note 4)	Nil	Without pressure gauge	●	●	●	●
			G	Round type pressure gauge (with limit indicator)	●	●	●	●
			M	Round type pressure gauge (with color zone)	●	●	●	●
			+					
❺	Attachment	c Pressure switch	Nil	Without attachment	●	●	●	●
			S Note 5)	Mounting position: AF+**S**+AR	●	●	●	●
		T-shaped spacer	T Note 5)	Mounting position: AF+**T**+AR	●	●	●	●
			+					
		d 3-port valve for residual pressure release	Nil	Without attachment	●	●	●	●
			V	Mounting position: AF+AR+**V**	●	●	●	●
			V1 Note 6)	Mounting position: **V**+AF+AR	●	●	●	●
			+					
❻	Semi-standard	e Set pressure Note 7)	Nil	0.05 to 0.7 MPa setting	●	●	●	●
			1	0.02 to 0.2 MPa setting	●	●	●	●
			+					
		f Bowl	Nil	Polycarbonate bowl	●	●	●	●
			C	With bowl guard	●	—	—	—
			+					
		g Filter drain port	Nil	With drain cock	●	●	●	●
			J Note 8)	Drain guide 1/8	●	—	—	—
				Drain guide 1/4	—	●	●	●
			W	Drain cock with barb fitting (for ø6 x ø4 nylon tube)	—	●	●	●

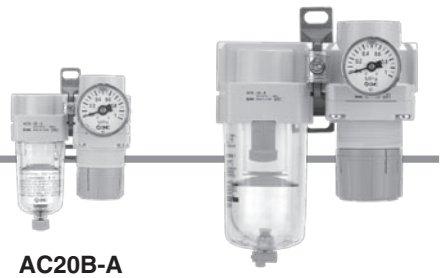

AC20B-A AC40B-A

		Symbol	Description	❶ Body size 20	25	30	40
❻ Semi-standard	h Exhaust mechanism	Nil	Relieving type	●	●	●	●
		N	Non-relieving type	●	●	●	●
		+					
	i Flow direction	Nil	Flow direction: Left to right	●	●	●	●
		R	Flow direction: Right to left	●	●	●	●
		+					
	j Pressure unit	Nil	Name plate and pressure gauge in imperial units: MPa	●	●	●	●
		Z Note 9)	Name plate, caution plate for bowl, and pressure gauge in imperial units: psi, °F	○ Note 10)	○ Note 10)	○ Note 10)	○ Note 10)

Note 1) Option G, M are not assembled and supplied loose at the time of shipment.
Note 2) When pressure is not applied, condensate which does not start the auto drain mechanism will be left in the bowl. Releasing the residual condensate before ending operations for the day is recommended.
Note 3) If the compressor is small (0.75 kW, discharge flow is less than 100 L/min[ANR]), air leakage from the drain cock may occur during start of operations. N.C. type is recommended.
Note 4) When the pressure gauge is attached, a 1.0 MPa pressure gauge will be fitted for standard (0.7 MPa) type. 0.4 MPa pressure gauge for 0.2 MPa type.
Note 5) The bracket position varies depending on the T-shaped spacer or pressure switch mounting.
Note 6) Make sure that the outlet pressure is released to atmospheric pressure using a pressure gauge.
Note 7) Pressure can be set higher than the specification pressure in some cases, but use pressure within the specification range.
Note 8) Without a valve function.
Note 9) For thread type: NPT. This product is for overseas use only according to the new Measurement Law. (The SI unit type is provided for use in Japan.)
MPa and psi are shown together on the pressure unit.
Round pressure gauge (with color zone): Cannot be used with M. Available by request for special.
Note 10) ○: For thread type: NPT only.

Standard Specifications

Model		AC20B-A	AC25B-A	AC30B-A	AC40B-A	AC40B-06-A
Component	Air filter	AF20-A	AF30-A	AF30-A	AF40-A	AF40-06-A
	Regulator	AR20-A	AR25-A	AR30-A	AR40-A	AR40-06-A
Port size		1/8, 1/4	1/4, 3/8	1/4, 3/8	1/4, 3/8, 1/2	3/4
Pressure gauge port size		1/8				
Fluid		Air				
Ambient and fluid temperature		– 5 to 60°C (with no freezing)				
Proof pressure		1.5 MPa				
Maximum operating pressure		1.0 MPa				
Set pressure range		0.05 to 0.7 MPa				
Nominal filtration rating		5 μm				
Bowl material		Polycarbonate				
Bowl guard		Semi-standard (Steel)	Standard (Polycarbonate)			
Regulator construction		Relieving type				
Weight (kg)		0.27	0.42	0.57	0.79	0.90

Dimensions

AC20B-A

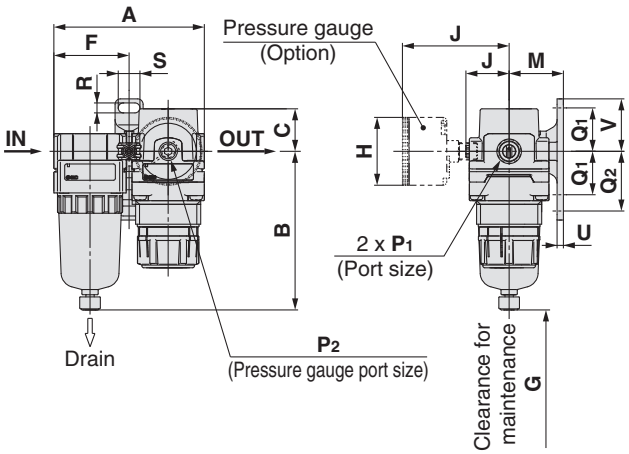

AC25B-A to AC40B-A

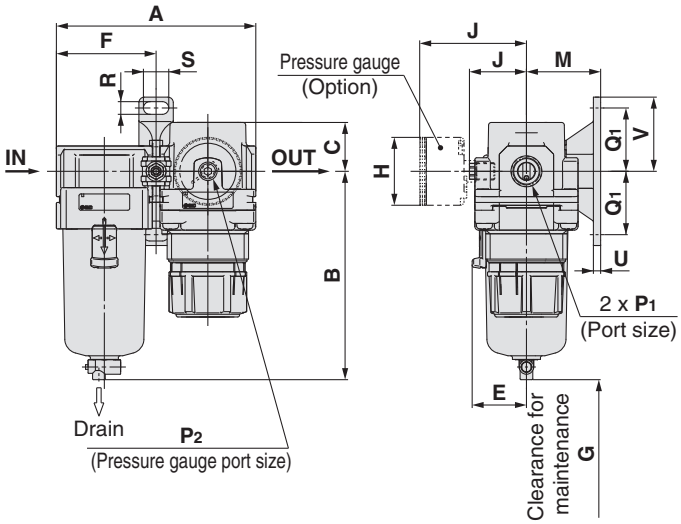

Applicable model	AC20B-A		AC25B-A to AC40B-A		
Optional/Semi-standard specifications	With auto drain (N.C.)	With drain guide	With auto drain (N.O./N.C.)	With drain guide	Drain cock with barb fitting
Dimensions	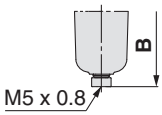	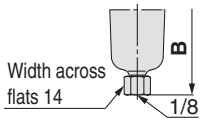	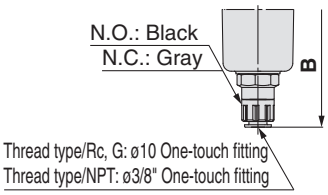	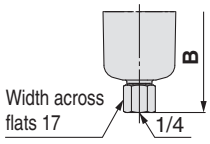	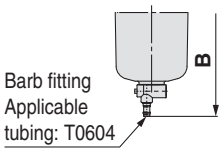

Model	Standard specifications															
	P_1	P_2	A	B	C	E	F	G	J	Bracket mount						
										M	Q_1	Q_2	R	S	U	V
AC20B-A	1/8, 1/4	1/8	83.2	87.6	23.5	—	41.6	25	23.4	30	24	33	5.5	12	3.5	29
AC25B-A	1/4, 3/8	1/8	110.2	115.1	23.5	30	55.1	35	30.5	41	35	—	7	14	4	41
AC30B-A	1/4, 3/8	1/8	110.2	115.1	27	30	55.1	35	30.5	41	35	—	7	14	4	41
AC40B-A	1/4, 3/8, 1/2	1/8	145.2	147.1	33.5	38.4	72.6	40	36.1	50	40	—	9	18	5	48
AC40B-06-A	3/4	1/8	155.2	149.1	33.5	38.4	77.6	40	39.6	50	40	—	9	18	5	48

Model	Optional specifications					Semi-standard specifications	
	Round type pressure gauge		Round type pressure gauge (with color zone)		With auto drain	With barb fitting	With drain guide
	H	J	H	J	B	B	B
AC20B-A	ø37.5	58.5	ø37.5	59.5	104.9	—	91.4
AC25B-A	ø37.5	58.5	ø37.5	59.5	156.8	123.6	121.9
AC30B-A	ø37.5	65	ø37.5	66	156.8	123.6	121.9
AC40B-A	ø42.5	72	ø42.5	72	186.9	155.6	153.9
AC40B-06-A	ø42.5	72	ø42.5	72	188.9	157.6	155.9

Air Combination

Air Filter + Mist Separator + Regulator

AC20C-A to AC40C-A

JIS Symbol

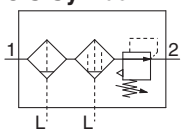

How to Order

AC 30 C– ☐ 03 DG – ☐ – ☐ –A

❶ ❷ ❸ ❹ ❺ ❻

- Option/Semi-standard: Select one each for **a** to **j**.
- Option/Attachment/Semi-standard symbol: When more than one specification is required, indicate in alphanumeric order.

Example) AC30C-F03DM-SV-1NR-A

			Symbol	Description	❶ Body size 20	25	30	40
❷	Thread type		Nil	Rc	●	●	●	●
			N	NPT	●	●	●	●
			F	G	●	●	●	●
			+					
❸	Port size		01	1/8	●	—	—	—
			02	1/4	●	●	●	●
			03	3/8	—	●	●	●
			04	1/2	—	—	—	●
			06	3/4	—	—	—	●
			+					
❹	Option Note 1)	a Float type auto drain	Nil	Without auto drain	●	●	●	●
			C Note 2)	N.C. (Normal close) Drain port is closed when pressure is not applied.	●	●	●	●
			D Note 3)	N.O. (Normal open) Drain port is open when pressure is not applied.	—	●	●	●
			+					
		b Pressure gauge Note 4)	Nil	Without pressure gauge	●	●	●	●
			G	Round type pressure gauge (with limit indicator)	●	●	●	●
			M	Round type pressure gauge (with color zone)	●	●	●	●
			+					
❺	Attachment	c Pressure switch	Nil	Without attachment	●	●	●	●
			S Note 5)	Mounting position: AF+AFM+**S**+AR	●	●	●	●
		T-shaped spacer	T Note 5)	Mounting position: AF+AFM+**T**+AR	●	●	●	●
			+					
		d 3-port valve for residual pressure release	Nil	Without attachment	●	●	●	●
			V	Mounting position: AF+AFM+AR+**V**	●	●	●	●
			V1 Note 6)	Mounting position: **V**+AF+AFM+AR	●	●	●	●
			+					
❻	Semi-standard	e Set pressure Note 7)	Nil	0.05 to 0.7 MPa setting	●	●	●	●
			1	0.02 to 0.2 MPa setting	●	●	●	●
			+					
		f Bowl	Nil	Polycarbonate bowl	●	●	●	●
			C	With bowl guard	●	—	—	—
			+					
		g Filter Mist separator drain port	Nil	With drain cock	●	●	●	●
			J Note 8)	Drain guide 1/8	●	—	—	—
				Drain guide 1/4	—	●	●	●
			W	Drain cock with barb fitting (for ø6 x ø4 nylon tube)	—	●	●	●
			+					
		h Exhaust mechanism	Nil	Relieving type	●	●	●	●
			N	Non-relieving type	●	●	●	●

AC20C-A **AC40C-A**

		Symbol	Description	❶ Body size 20	25	30	40
❻ Semi-standard	i Flow direction	Nil	Flow direction: Left to right	●	●	●	●
		R	Flow direction: Right to left	●	●	●	●
		+					
	j Pressure unit	Nil	Name plate and pressure gauge in imperial units: MPa	●	●	●	●
		Z Note 9)	Name plate, caution plate for bowl, and pressure gauge in imperial units: psi, °F	○ Note 10)	○ Note 10)	○ Note 10)	○ Note 10)

Note 1) Option G, M are not assembled and supplied loose at the time of shipment.
Note 2) When pressure is not applied, condensate which does not start the auto drain mechanism will be left in the bowl. Releasing the residual condensate before ending operations for the day is recommended.
Note 3) If the compressor is small (0.75 kW, discharge flow is less than 100 L/min[ANR]), air leakage from the drain cock may occur during start of operations. N.C. type is recommended.
Note 4) When the pressure gauge is attached, a 1.0 MPa pressure gauge will be fitted for standard (0.7 MPa) type. 0.4 MPa pressure gauge for 0.2 MPa type.
Note 5) The bracket position varies depending on the T-shaped spacer or pressure switch mounting.
Note 6) Make sure that the outlet pressure is released to atmospheric pressure using a pressure gauge.
Note 7) Pressure can be set higher than the specification pressure in some cases, but use pressure within the specification range.
Note 8) Without a valve function.
Note 9) For thread type: NPT. This product is for overseas use only according to the new Measurement Law. (The SI unit type is provided for use in Japan.)
MPa and psi are shown together on the pressure unit.
Round pressure gauge (with color zone): Cannot be used with M. Available by request for special.
Note 10) ○: For thread type: NPT only.

Standard Specifications

Model		AC20C-A	AC25C-A	AC30C-A	AC40C-A	AC40C-06-A
Component	Air filter	AF20-A	AF30-A	AF30-A	AF40-A	AF40-06-A
	Mist separator	AFM20-A	AFM30-A	AFM30-A	AFM40-A	AFM40-06-A
	Regulator	AR20-A	AR25-A	AR30-A	AR40-A	AR40-06-A
Port size		1/8, 1/4	1/4, 3/8	1/4, 3/8	1/4, 3/8, 1/2	3/4
Pressure gauge port size		1/8				
Fluid		Air				
Ambient and fluid temperature		– 5 to 60°C (with no freezing)				
Proof pressure		1.5 MPa				
Maximum operating pressure		1.0 MPa				
Minimum operating pressure		0.05 MPa				
Set pressure range		0.05 to 0.7 MPa				
Nominal filtration rating		AF: 5 μm, AFM: 0.3 μm (99.9% filtered particle size)				
Outlet side oil mist concentration		MAX 1.0 mg/m³ (ANR) (≈0.8 ppm) Note 2) Note 3)				
Rated flow (L/min (ANR)) Note 1)		200	450	450	1100	1100
Bowl material		Polycarbonate				
Bowl guard		Semi-standard (Steel)	Standard (Polycarbonate)			
Regulator construction		Relieving type				
Weight (kg)		0.38	0.67	0.82	1.26	1.42

Note 1) Conditions: Mist separator inlet pressure: 0.7 MPa; The rated flow varies depending on the inlet pressure.
Keep the air flow within the rated flow to prevent an outflow of lubricant to the outlet side.
Note 2) When the compressor oil mist discharge concentration is 30 mg/m³ (ANR).
Note 3) Bowl O-ring and other O-rings are slightly lubricated.

Dimensions

AC20C-A

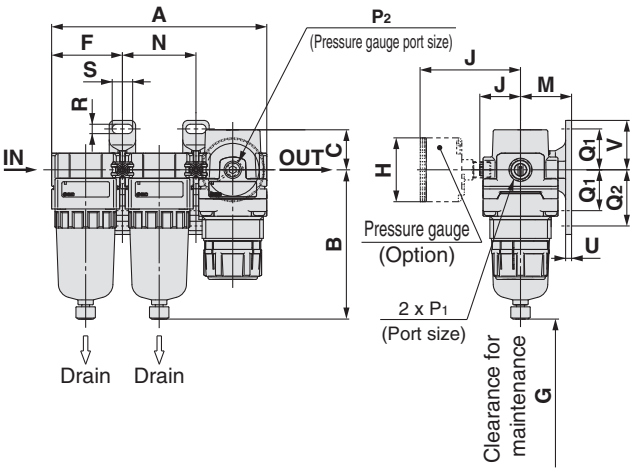

AC25C-A to AC40C-06-A

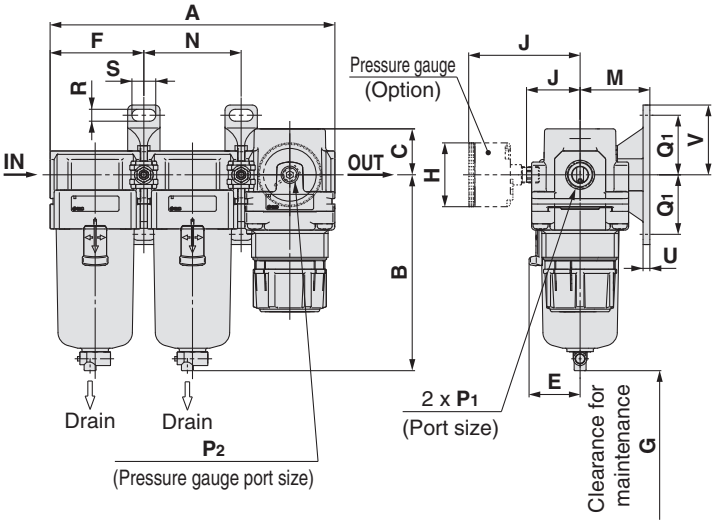

Applicable model	AC20C-A		AC25C-A to AC40C-06-A		
Optional/Semi-standard specifications	With auto drain (N.C.)	With drain guide	With auto drain (N.O./N.C.)	With drain guide	Drain cock with barb fitting
Dimensions	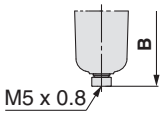	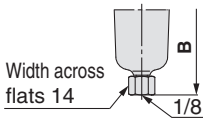	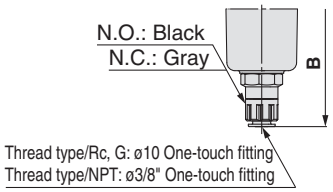	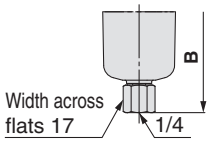	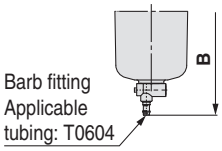

Model	Standard specifications																
	P_1	P_2	A	B	C	E	F	G	J	Bracket mount							
										M	N	Q_1	Q_2	R	S	U	V
AC20C-A	1/8, 1/4	1/8	126.4	87.6	23.5	—	41.6	40	23.4	30	43.2	24	33	5.5	12	3.5	29
AC25C-A	1/4, 3/8	1/8	167.4	115.1	23.5	30	55.1	50	30.5	41	57.2	35	—	7	14	4	41
AC30C-A	1/4, 3/8	1/8	167.4	115.1	27	30	55.1	50	30.5	41	57.2	35	—	7	14	4	41
AC40C-A	1/4, 3/8, 1/2	1/8	220.4	147.1	33.5	38.4	72.6	75	36.1	50	75.2	40	—	9	18	5	48
AC40C-06-A	3/4	1/8	235.4	149.1	33.5	38.4	77.6	75	39.6	50	80.2	40	—	9	18	5	48

Model	Optional specifications					Semi-standard specifications	
	Round type pressure gauge		Round type pressure gauge (with color zone)		With auto drain	With barb fitting	With drain guide
	H	J	H	J	B	B	B
AC20C-A	ø37.5	58.5	ø37.5	59.5	104.9	—	91.4
AC25C-A	ø37.5	58.5	ø37.5	59.5	156.8	123.6	121.9
AC30C-A	ø37.5	65	ø37.5	66	156.8	123.6	121.9
AC40C-A	ø42.5	72	ø42.5	72	186.9	155.6	153.9
AC40C-06-A	ø42.5	72	ø42.5	72	188.9	157.6	155.9

Air Combination

Filter Regulator + Mist Separator

AC20D-A to AC40D-A

JIS Symbol

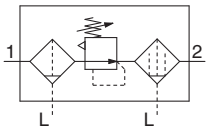

How to Order

AC 30 D– ☐ 03 DG – ☐ – ☐ –A

❶ ❷ ❸ ❹ ❺ ❻

- Option/Semi-standard: Select one each for **a** to **j**.
- Option/Attachment/Semi-standard symbol: When more than one specification is required, indicate in alphanumeric order.

Example) AC30D-F03DM-SV-1NR-A

			Symbol	Description	❶ Body size 20	30	40
❷	Thread type		Nil	Rc	●	●	●
			N	NPT	●	●	●
			F	G	●	●	●
			+				
❸	Port size		01	1/8	●	—	—
			02	1/4	●	●	●
			03	3/8	—	●	●
			04	1/2	—	—	●
			06	3/4	—	—	●
			+				
❹ Option Note 1)	a	Float type auto drain	Nil	Without auto drain	●	●	●
			C Note 2)	N.C. (Normal close) Drain port is closed when pressure is not applied.	●	●	●
			D Note 3)	N.O. (Normal open) Drain port is open when pressure is not applied.	—	●	●
			+				
	b	Pressure gauge Note 4)	Nil	Without pressure gauge	●	●	●
			G	Round type pressure gauge (with limit indicator)	●	●	●
			M	Round type pressure gauge (with color zone)	●	●	●
			+				
❺ Attachment	c	Pressure switch	Nil	Without attachment	●	●	●
			S Note 5)	Mounting position: AW+**S**+AFM	●	●	●
			+				
	d	3-port valve for residual pressure release	Nil	Without attachment	●	●	●
			V	Mounting position: AW+AFM+**V**	●	●	●
			V1 Note 6)	Mounting position: **V**+AW+AFM	●	●	●
			+				
❻ Semi-standard	e	Set pressure Note 7)	Nil	0.05 to 0.7 MPa setting	●	●	●
			1	0.02 to 0.2 MPa setting	●	●	●
			+				
	f	Bowl	Nil	Polycarbonate bowl	●	●	●
			C	With bowl guard	●	—	—
			+				
	g	Filter regulator Mist separator drain port	Nil	With drain cock	●	●	●
			J Note 8)	Drain guide 1/8	●	—	—
				Drain guide 1/4	—	●	●
			W	Drain cock with barb fitting (for ø6 x ø4 nylon tube)	—	●	●
			+				
	h	Exhaust mechanism	Nil	Relieving type	●	●	●
			N	Non-relieving type	●	●	●
			+				
	i	Flow direction	Nil	Flow direction: Left to right	●	●	●
			R	Flow direction: Right to left	●	●	●

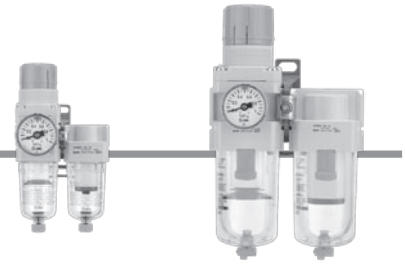

AC20D-A **AC40D-A**

	Symbol	Description	❶ Body size 20	30	40
❻ Semi-standard — j Pressure unit	**Nil**	Name plate and pressure gauge in imperial units: MPa	●	●	●
	Z Note 9)	Name plate, caution plate for bowl, and pressure gauge in imperial units: psi, °F	○ Note 10)	○ Note 10)	○ Note 10)

Note 1) Option G, M are not assembled and supplied loose at the time of shipment.
Note 2) When pressure is not applied, condensate which does not start the auto drain mechanism will be left in the bowl. Releasing the residual condensate before ending operations for the day is recommended.
Note 3) If the compressor is small (0.75 kW, discharge flow is less than 100 L/min[ANR]), air leakage from the drain cock may occur during start of operations. N.C. type is recommended.
Note 4) When the pressure gauge is attached, a 1.0 MPa pressure gauge will be fitted for standard (0.7 MPa) type. 0.4 MPa pressure gauge for 0.2 MPa type.
Note 5) The bracket position varies depending on the pressure switch mounting.
Note 6) Make sure that the outlet pressure is released to atmospheric pressure using a pressure gauge.
Note 7) Pressure can be set higher than the specification pressure in some cases, but use pressure within the specification range.
Note 8) Without a valve function.
Note 9) For thread type: NPT. This product is for overseas use only according to the new Measurement Law. (The SI unit type is provided for use in Japan.)
MPa and psi are shown together on the pressure unit.
Round pressure gauge (with color zone): Cannot be used with M. Available by request for special.
Note 10) ○: For thread type: NPT only.

Standard Specifications

Model		AC20D-A	AC30D-A	AC40D-A	AC40D-06-A
Component	**Filter regulator**	**AW20-A**	**AW30-A**	**AW40-A**	**AW40-06-A**
	Mist separator	**AFM20-A**	**AFM30-A**	**AFM40-A**	**AFM40-06-A**
Port size		1/8, 1/4	1/4, 3/8	1/4, 3/8, 1/2	3/4
Pressure gauge port size		1/8			
Fluid		Air			
Ambient and fluid temperature		– 5 to 60°C (with no freezing)			
Proof pressure		1.5 MPa			
Maximum operating pressure		1.0 MPa			
Minimum operating pressure		0.05 MPa			
Set pressure range		0.05 to 0.7 MPa			
Nominal filtration rating		AW: 5 μm, AFM: 0.3 μm (99.9% filtered particle size)			
Rated flow (L/min (ANR)) Note 1)		150	330	800	800
Outlet side oil mist concentration		MAX 1.0 mg/m³ (ANR) (≈0.8 ppm) Note 2) Note 3)			
Bowl material		Polycarbonate			
Bowl guard		Semi-standard (Steel)	Standard (Polycarbonate)		
Regulator construction		Relieving type			
Weight (kg)		0.32	0.65	1.22	1.34

Note 1) Conditions: Mist separator inlet pressure: 0.5 MPa; The rated flow varies depending on the inlet pressure.
Keep the air flow within the rated flow to prevent an outflow of lubricant to the outlet side.
Note 2) When the compressor oil mist discharge concentration is 30 mg/m³ (ANR).
Note 3) Bowl O-ring and other O-rings are slightly lubricated.

Dimensions

AC20D-A

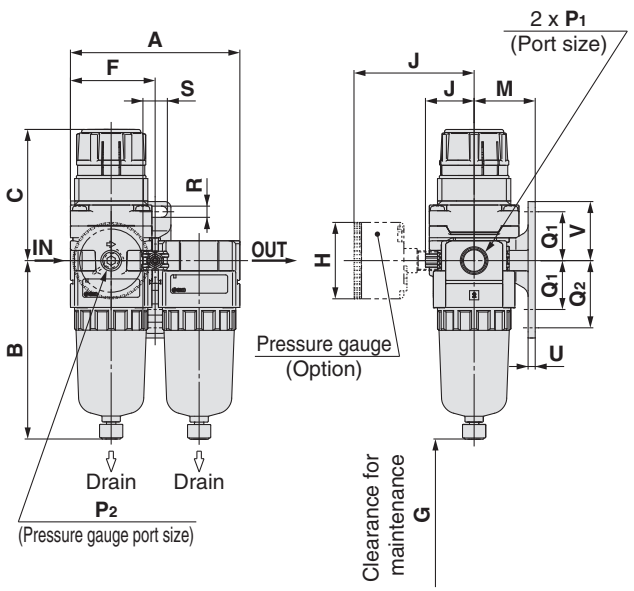

AC30D-A to AC40D-06-A

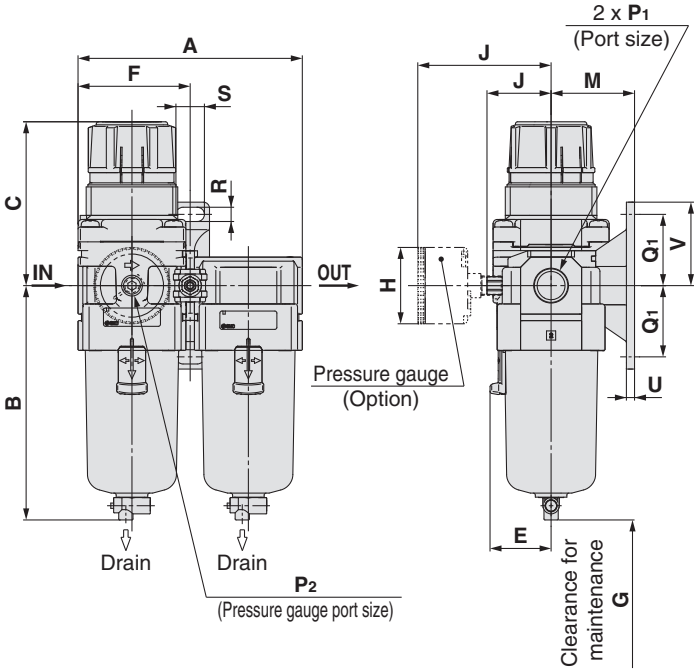

Applicable model	AC20D-A		AC30D-A to AC40D-06-A		
Optional/Semi-standard specifications	With auto drain (N.C.)	With drain guide	With auto drain (N.O./N.C.)	With drain guide	Drain cock with barb fitting
Dimensions	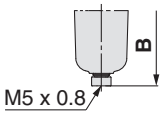	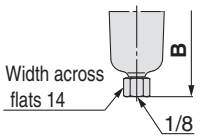	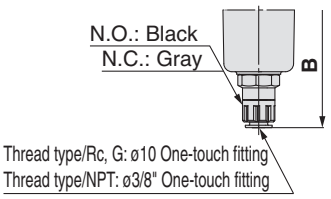	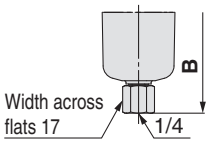	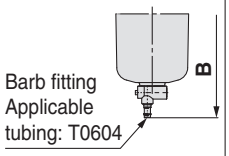

Model	Standard specifications															
	P_1	P_2	A	B	C Note)	E	F	G	J	Bracket mount						
										M	Q_1	Q_2	R	S	U	V
AC20D-A	1/8, 1/4	1/8	83.2	87.6	67.4	—	41.6	40	23.4	30	24	33	5.5	12	3.5	29
AC30D-A	1/4, 3/8	1/8	110.2	115.1	83.5	30	55.1	50	30.5	41	35	—	7	14	4	41
AC40D-A	1/4, 3/8, 1/2	1/8	145.2	147.1	100	38.4	72.6	75	36.1	50	40	—	9	18	5	48
AC40D-06-A	3/4	1/8	155.2	149.1	101.5	38.4	77.6	75	39.6	50	40	—	9	18	5	48

Model	Optional specifications					Semi-standard specifications	
	Round type pressure gauge		Round type pressure gauge (with color zone)		With auto drain	With barb fitting	With drain guide
	H	J	H	J	B	B	B
AC20D-A	ø37.5	58.5	ø37.5	59.5	104.9	—	91.4
AC30D-A	ø37.5	65	ø37.5	66	156.8	123.6	121.9
AC40D-A	ø42.5	72	ø42.5	72	186.9	155.6	153.9
AC40D-06-A	ø42.5	72	ø42.5	72	188.9	157.6	155.9

Note) The total length of C dimension is the length when the filter regulator knob is unlocked.

Air Combination
Series AC
Options/Attachments

Options/Attachments Part No.

Section	Type \ Model		Part no.				
			For AC20-A	For AC25-A	For AC30-A	For AC40-A	For AC40-06-A
			For AC20A-A	—	For AC30A-A	For AC40A-A	For AC40A-06-A
			For AC20B-A	For AC25B-A	For AC30B-A	For AC40B-A	For AC40B-06-A
			For AC20C-A	For AC25C-A	For AC30C-A	For AC40C-A	For AC40C-06-A
			For AC20D-A	—	For AC30D-A	For AC40D-A	For AC40D-06-A
Option	Pressure gauge Note 1) Round type	Standard	G36-10-□01			G46-10-□01	
		0.02 to 0.2 MPa setting	G36-4-□01			G46-4-□01	
	Pressure gauge Note 1) Round type (with color zone)	Standard	G36-10-□01-L			G46-10-□01-L	
		0.02 to 0.2 MPa setting	G36-4-□01-L			G46-4-□01-L	
Attachment	Spacer		Y200-A	Y300-A		Y400-A	Y500-A
	Spacer with bracket		Y200T-A	Y300T-A		Y400T-A	Y500T-A
	Check valve Note 2) Note 3)		AKM2000-□01-A (□02)-A	AKM3000-(□01)-A □02-A		AKM4000-(□02)-A □03-A	—
	Pressure switch Note 3)		IS10M-20-A	IS10M-30-A		IS10M-40-A	IS10M-50-A
	T-shaped spacer Note 2) Note 3)		Y210-□01-A (□02)-A	Y310-(□01)-A □02-A		Y410-(□02)-A □03-A	Y510-(□02)-A □03-A
	3-port valve for residual pressure release Note 3)		VHS20-□01A □02A	VHS30-□02A □03A		□02A VHS40-□03A □04A	VHS40-□06A
	Piping adapter Note 3)		□01-A E200-□02-A □03-A	□02 E300-□03-A □04		□02-A E400-□03-A □04-A □06-A	E500-□06-A
	Pressure switch with piping adapter Note 3)		□01-A IS10E-20□02-A □03-A	□02-A IS10E-30□03-A □04-A		□02-A IS10E-40□03-A □04-A □06-A	—
	Cross spacer Note 3)		Y24-□01-A □02-A	Y34-□01-A □02-A		Y44-□02-A □03-A	Y54-□03-A □04-A

Note 1) □ in part numbers for a round pressure gauge indicates a type of connection thread. No indication is necessary for R; however, indicate N for NPT. Please contact SMC regarding the connection thread NPT and pressure gauge supply for psi unit specifications.
Note 2) For F.R.L. units, port sizes without ( ) are standard specifications.
Note 3) Separate interfaces are required for modular unit.

Check Valve: (K) 1/8, 1/4, 3/8

A check valve with intermediate air release port can be easily installed to prevent a backflow of lubricant when redirecting the air flow and releasing the air on the outlet side of the regulator.

AKM 30 00 – □ 01 – A

❶ ❷ ❸

JIS Symbol

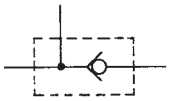

	Symbol	Description	❶ Body size 20	30	40
❷ Thread type	Nil	Rc	●	●	●
	N	NPT	●	●	●
	F	G	●	●	●
+					
❸ By-pass port size	01	1/8	●	●	—
	02	1/4	●	●	●
	03	3/8	—	—	●

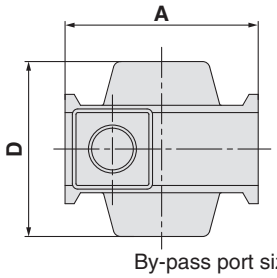

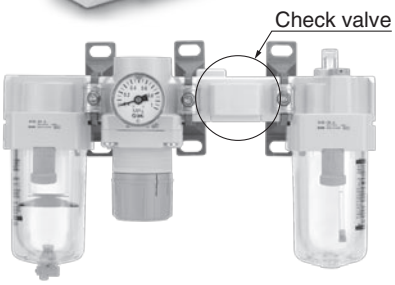

Specifications

Model	Effective area (mm²)
AKM2000-A	28
AKM3000-A	55
AKM4000-A	111

Be sure to use above check valves when redirecting the air flow on the inlet side of the lubricator. Threads for IN and OUT ports are not machined.

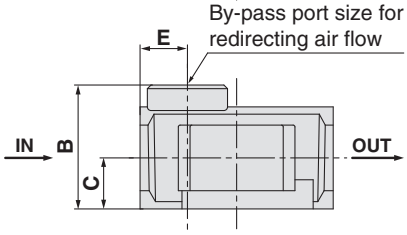

Model	By-pass port size	A	B	C	D	E	Applicable model
AKM2000-A	1/8, 1/4	40	28	11	40	11	**AC20-A, AC20A-A**
AKM3000-A	1/8, 1/4	53	34	14	48	13	**AC25-A** **AC30-A, AC30A-A**
AKM4000-A	1/4, 3/8	70	42	18	54	15	**AC40-A, AC40A-A** Note)

Note) A pressure switch cannot be mounted on the AC40□-06-A.
∗ Refer to the attachment table above for standard by-pass port sizes applicable to the AC.

Pressure Switch: (S)

A compact integrated pressure switch can be easily installed and facilitates the pressure detection of the line.

IS10M – 30 – □ – A

❶ ❷

• Semi-standard: Select one each for **a** to **c**.
• Semi-standard symbol: When more than one specification is required, indicate in alphanumeric order.
Example)IS10M-30-6LP

			Symbol	Description	❶ Body size 20	30	40	50	60
❷ Semi-standard	a	Set pressure length	Nil	0.1 to 0.4 MPa	●	●	●	●	●
			6 Note 1)	0.1 to 0.6 MPa	●	●	●	●	●
		+							
	b	Lead wire length	Nil	0.5 m	●	●	●	●	●
			L	3 m	●	●	●	●	●
			Z	5 m	●	●	●	●	●
		+							
	c	Pressure unit of the scale plate	Nil	MPa	●	●	●	●	●
			P Note 2)	MPa/psi dual scale	●	●	●	●	●

Note 1) Set pressure range of 6P (L, Z) is 0.2 to 0.6 MPa (30 to 90 psi).
Note 2) This product is for overseas use only according to the new Measurement Law.
(The SI unit type is provided for use in Japan.)

JIS Symbol

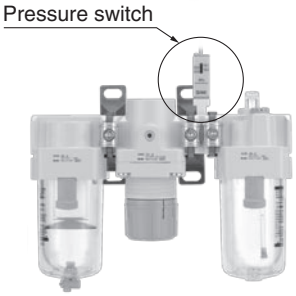

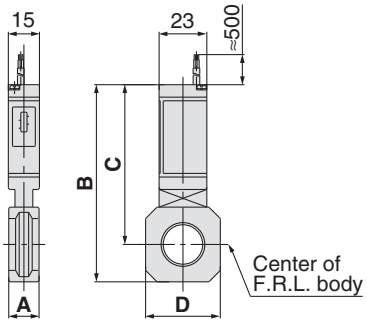

Specifications

Fluid	Air
Ambient and fluid temperature	–5 to 60°C (with no freezing)
Proof pressure	1.0 MPa
Maximum operating pressure	0.7 MPa
Set pressure range (when OFF)	0.1 to 0.4 MPa
Hysteresis	0.08 MPa or less

Switch Characteristics

Contact point configuration	1a
Maximum contact point capacity	2 VA (AC), 2 W (DC)
Operating voltage: AC, DC	100V or less
Maximum operating current	12 V to 24 VAC, DC: 50 mA 48 VAC, DC: 40 mA 100 VAC, DC: 20 mA

Note) For detailed specifications on the IS10 series, please refer to the section of our website IS10 series, http://www.smcworld.com

Model	A	B	C	D	Applicable model
IS10M-20-A	10.6	74.2	64.4	28	**AC20□-A**
IS10M-30-A	12.6	84.5	70.5	30	**AC25□-A, AC30□-A**
IS10M-40-A	14.6	93.3	75.3	36	**AC40□-A**
IS10M-50-A	16.6	97.3	77.3	44	**AC40□-06-A**

∗ Separate spacers are required for modular unit.

T-shaped Spacer: (T) 1/8, 1/4, 3/8

Using a T-shaped facilitates the branching of air flow.

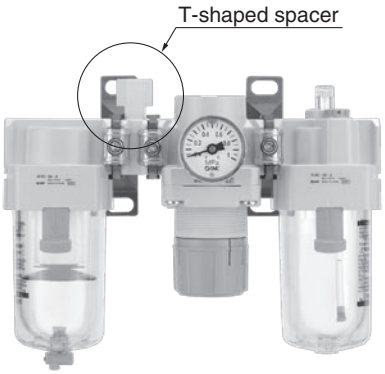

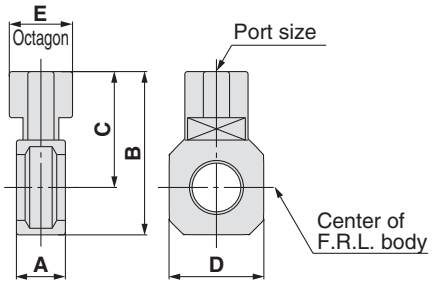

Model Note)	Port size	A	B	C	D	E	Applicable model
Y210-□01-A	1/8	14.6	41.8	32	28	19	**AC20-A, AC20B-A AC20C-A**
Y210-□02-A	1/4						
Y310-□01-A	1/8	14.6	52.7	38.7	30	19	**AC25-A, AC25B-A AC25C-A, AC30-A AC30B-A, AC30C-A**
Y310-□02-A	1/4						
Y410-□02-A	1/4	18.6	62	44	36	24	**AC40-A, AC40B-A AC40C-A**
Y410-□03-A	3/8						
Y510-□02-A	1/4	18.6	66	46	44	24	**AC40-06-A, AC40B-06-A AC40C-06-A**
Y510-□03-A	3/8						

Note) □ in model numbers indicates a thread type. No indication is necessary for Rc; however, indicate N for NPT, and F for G.
∗ Separate interfaces are required for modular unit.
∗ Refer to the attachment table on page 22 for standard port sizes when using with the AC.

Caution on Mounting

If a T-shaped spacer is used on the IN side of the lubricator, lubricant may be mixed. Use the AKM series check valve to avoid such possibility.

Pressure Relief 3 Port Valve: (V)

With the use of a 3-port valve for residual pressure release, pressure left in the line can be easily exhausted.

VHS 30 – □ 03 A – □

❶ ❷ ❸ ❹

- Semi-standard: Select one each for **a** to **b**.
- Semi-standard symbol: When more than one specification is required, indicate in alphabetic order.

Example) VHS30-03A-RZ

		Symbol	Description	❶ Body size 20	30	40
❷	Thread type	Nil	Rc	●	●	●
		N Note)	NPT	●	●	●
		F Note)	G	●	●	●
❸	Port size	01	1/8	●	—	—
		02	1/4	●	●	●
		03	3/8	—	●	●
		04	1/2	—	—	●
		06	3/4	—	—	●
❹	Semi-standard a Flow direction	Nil	Flow direction: Left to right	●	●	●
		R	Flow direction: Right to left	●	●	●
	b Pressure unit	Nil	Name plate in imperial units: MPa	●	●	●
		Z Note)	Name plate in imperial units: psi	●	●	●

Note) For thread type: NPT only. This product is for overseas use only according to the new Measurement Law.
(The SI unit type is provided for use in Japan.)

JIS Symbol

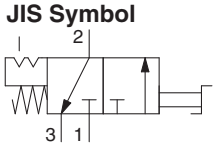

3-port valve for residual pressure release

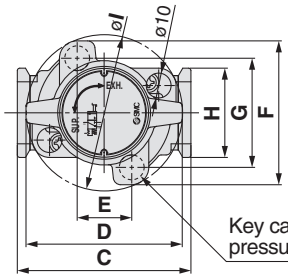

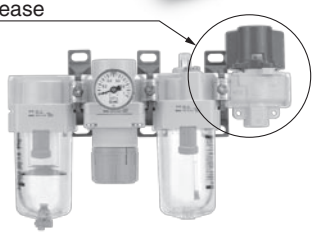

Key can be mounted when residual pressure is released.

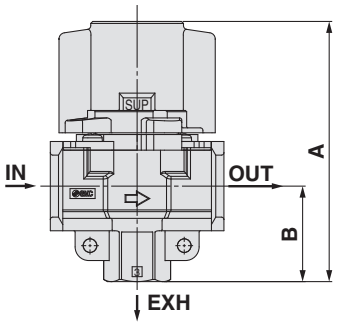

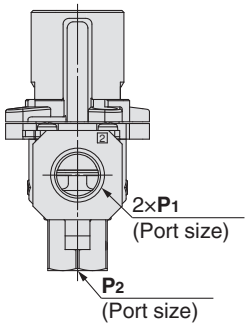

Specifications

Model	Port size IN, OUT	Port size EXH	Specifications IN → OUT C(dm³/s·bar)	b	Cv	OUT → EXH C(dm³/s·bar)	b	Cv
VHS20	1/8	1/8	2.4	0.43	0.65	2.5	0.39	0.69
	1/4		3.3	0.40	0.88	3.1	0.51	0.84
VHS30	1/4	1/4	6.4	0.45	1.7	6.2	0.38	1.7
	3/8		8.3	0.41	2.3	7.0	0.41	1.9
VHS40	1/4	3/8	7.3	0.49	2.0	8.5	0.35	2.3
	3/8		10.9	0.45	3.0	11.6	0.40	3.1
	1/2		14.2	0.39	3.8	13.3	0.43	3.6
VHS40-06	3/4	1/2	18.3	0.31	5.0	17.7	0.37	4.8

Note) Use an air filter on the IN side for operating protection.

Model	Standard specifications P1	P2	A	B	C	D	E	F	G	H	I
VHS20	1/8, 1/4	1/8	66.4	22.3	40	37.5	14	46.6	33.6	28	37.5
VHS30	1/4, 3/8	1/4	80.3	29.4	53	49	19	52	38	30	49
VHS40	1/4, 3/8, 1/2	3/8	104.9	38.5	70	63	22	58	44	36	63
VHS40-06	3/4	1/2	110.4	42	75	63	22	58	44	44	63

Cross Spacer: 1/8, 1/4, 3/8, 1/2

Pipings are possible in all 4 directions.
IN/OUT ports are not machined for threads.
Please contact SMC if threaded (machined) ports are required.

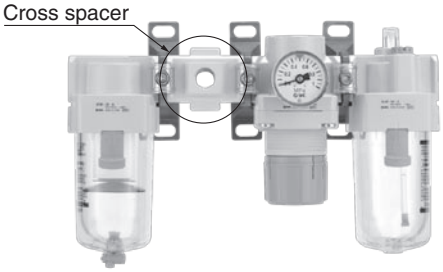

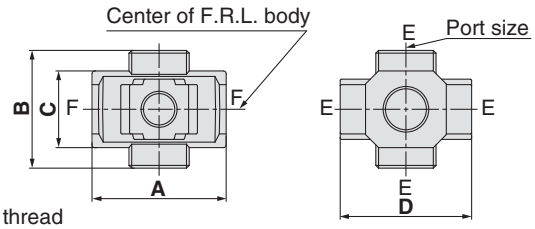

E: 4 × Rc
F: Without thread

Model Note)	Port size	A	B	C	D	Applicable model
Y24-□01-A	1/8	40	40	22	40	AC20□-A
Y24-□02-A	1/4					
Y34-□01-A	1/8	49	43	28	48	AC25□-A, AC30□-A
Y34-□02-A	1/4					
Y44-□02-A	1/4	60	48	36	54	AC40□-A
Y44-□03-A	3/8					
Y54-□03-A	3/8	72	62	40	62	AC40□-06-A
Y54-□04-A	1/2					

Note) □ in model numbers indicates a thread type. No indication is necessary for Rc; however, indicate N for NPT, and F for G.
∗ If threaded IN/OUT ports are required, they are available as a special order. Please contact SMC.
∗ Two hexagon socket head plugs are included in the package.

Caution on Mounting

1. When mounting a cross interface directly on the IN side of the lubricator, be sure to use the AKM series check valve between the lubricator and cross interface.
2. Factory mounting of a cross interface on the AC model is available as a special order.

Piping Adapter: 1/8, 1/4, 3/8, 1/2, 3/4

A piping adapter allows installation/removal of the component without removing the piping and thus makes maintenance easier.

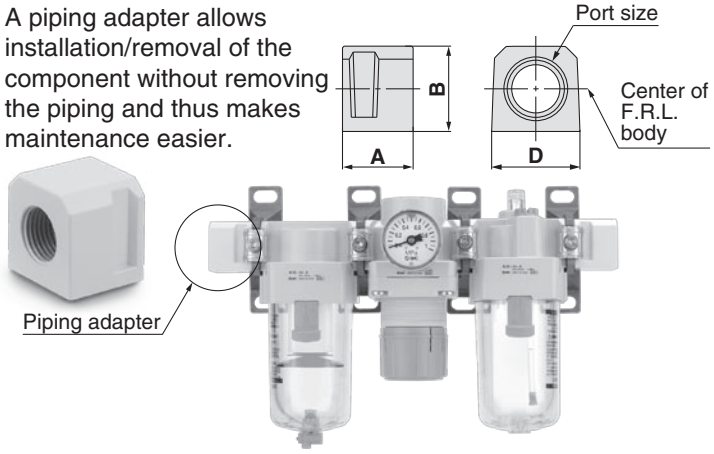

Model Note)	Portsize	A	B	D	Applicable model
E200-□01-A	1/8	29.8	23.5	28	**AC20□-A**
E200-□02-A	1/4				
E200-□03-A	3/8				
E300-□02-A	1/4	31.8	30	30	**AC25□-A, AC30□-A**
E300-□03-A	3/8				
E300-□04-A	1/2				
E400-□02-A	1/4	31.8	36	36	**AC40□-A**
E400-□03-A	3/8				
E400-□04-A	1/2				
E400-□06-A	3/4				
E500-□06-A	3/4	31.8	40	44	**AC40□-06-A**

Note) □ in model numbers indicates a thread type. No indication is necessary for Rc; however, indicate N for NPT, and F for G.
∗ Separate interfaces are required for modular unit.
∗ Factory mounting of a piping adapter on the AC models is available as a special order.

Pressure Switch with Piping Adapter

IS10E – 30 □ 03 – □ – A
❶ ❷ ❸ ❹

JIS Symbol

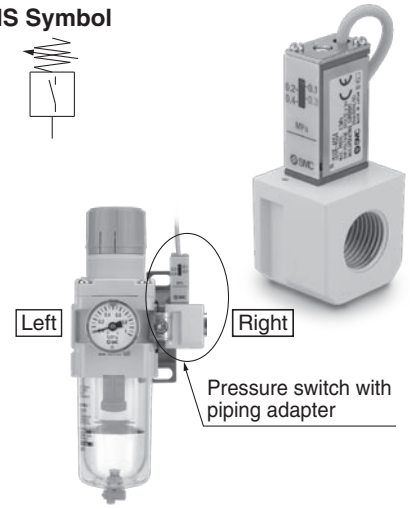

• Semi-standard: Select one each for **a** to **d**.
• Semi-standard symbol: When more than one specification is required, indicate in alphanumeric order.
Example) IS10E-30N03-6PRZ

		Symbol	Description	❶ Body size 20	30	40
❷	Thread type	**Nil**	Rc	●	●	●
		N Note)	NPT	●	●	●
		F Note)	G	●	●	●
		+				
❸	Port size	**01**	1/8	●	—	—
		02	1/4	●	●	●
		03	3/8	●	●	●
		04	1/2	—	●	●
		06	3/4	—	—	●
		+				
❹ Semi-standard	a Set pressure range	**Nil**	0.1 to 0.4 MPa	●	●	●
		6 Note 1)	0.1 to 0.6 MPa	●	●	●
		+				
	b Lead wire length	**Nil**	0.5 m	●	●	●
		L	3 m	●	●	●
		Z	5 m	●	●	●
		+				
	c Pressure unit of the scale plate	**Nil**	MPa	●	●	●
		P Note 2)	MPa/psi dual scale	●	●	●
		+				
	d Mounting position	**Nil**	Right	●	●	●
		R	Left	●	●	●

Note 1) Set pressure range of 6P (L, Z) is 0.2 to 0.6 MPa (30 to 90 psi).
Note 2) For thread type: NPT only. This product is for overseas use only according to the new Measurement Law. (The SI unit type is provided for use in Japan.)

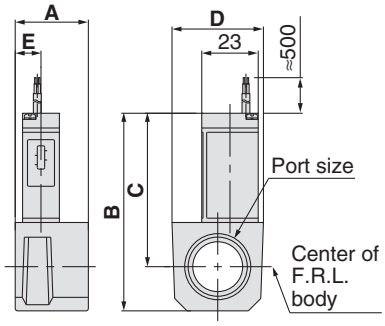

Model Note 1)	Port size	A	B	C	D	E	Applicable model
IS10E-20□01-A	1/8	29.8	66.3	55.3	28	16	**AC20□-A**
IS10E-20□02-A	1/4						
IS10E-20□03-A	3/8						
IS10E-30□02-A	1/4	31.8	72.8	58.8	30	13	**AC25□-A, AC30□-A**
IS10E-30□03-A	3/8						
IS10E-30□04-A	1/2						
IS10E-40□02-A	1/4	31.8	78.8	60.8	37	12.5	Note 2) **AC40□-A**
IS10E-40□03-A	3/8						
IS10E-40□04-A	1/2						
IS10E-40□06-A	3/4						

Note 1) □ in the model numbers indicates a thread type. No indication is necessary for Rc; however, indicate N for NPT, and F for G.
Note 2) Cannot be mounted on the AC40□-06-A.
∗ Separate interfaces are required for modular unit.
∗ The pressure switch on the AC40□-06-A can be mounted by screwing IS10-01 into the piping adapter E500-□06-A-X501 (with top-face thread Rc 1/8). Products with a premounted switch are available as a special order. Please contact SMC regarding their availability.

Specifications

Fluid	Air
Ambient and fluid temperature	−5 to 60°C (with no freezing)
Proof pressure	1.0 MPa
Maximum operating pressure	0.7 MPa
Set pressure range (when OFF)	0.1 to 0.4 MPa
Hysteresis	0.08 MPa or less

Switch Characteristics

Contact point configuration	1a
Maximum contact point capacity	2 VA(AC), 2 W(DC)
Operating voltage: AC, DC	100 V or less
Maximum operating current	12 V to 24 V AC, DC: 50 mA 48 V AC, DC: 40 mA 100 V AC, DC: 20 mA

Accessories (Spacers/Brackets)

Spacer

Y200-A Y400-A

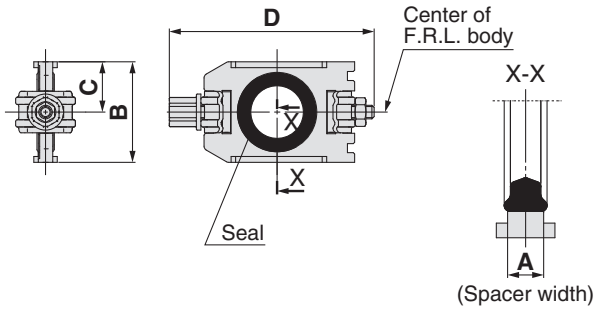

Model	A	B	C	D	Applicable model
Y200-A	3.2	22.4	11.2	44.9	**AC20□-A**
Y300-A	4.2	34.2	17.1	57.9	**AC25□-A, AC30□-A**
Y400-A	5.2	42.2	21.1	68.5	**AC40□-A**
Y500-A	5.2	46.2	23.1	75.6	**AC40□-06-A**

Replacement Parts

Description	Material	Part no.			
		Y200-A	**Y300-A**	**Y400-A**	**Y500-A**
Seal	HNBR	Y220P-050S	Y320P-050S	Y420P-050S	Y520P-050S

Spacer with Bracket

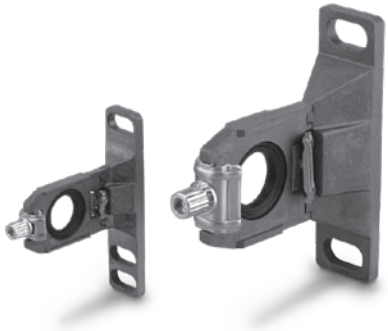

Y200T-A Y400T-A

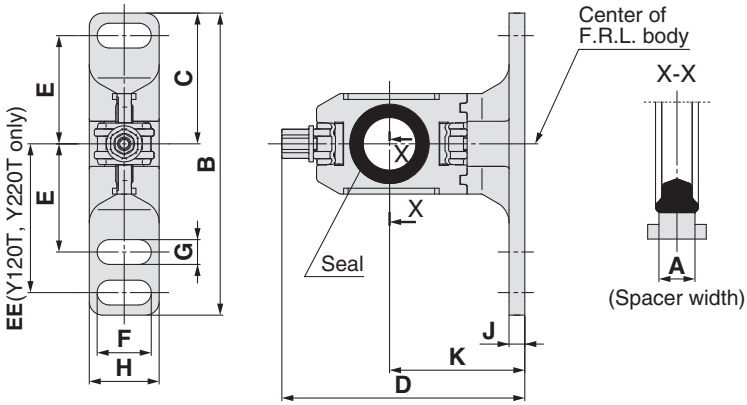

Model	A	B	C	D	E	EE	F	G	H	J	K	Applicable model
Y200T-A	3.2	67	29	53.4	24	33	12	5.5	15.5	3.5	30	**AC20□-A**
Y300T-A	4.2	82	41	71.5	35	—	14	7	19	4	41	**AC25□-A, AC30□-A**
Y400T-A	5.2	96	48	86.1	40	—	18	9	26	5	50	**AC40□-A**
Y500T-A	5.2	96	48	89.6	40	—	18	9	26	5	50	**AC40□-06-A**

Replacement Parts

Description	Material	Part no.			
		Y200T-A	**Y300T-A**	**Y400T-A**	**Y500T-A**
Seal	HNBR	Y220P-050S	Y320P-050S	Y420P-050S	Y520P-050S

Mounting Position for Spacer with Bracket

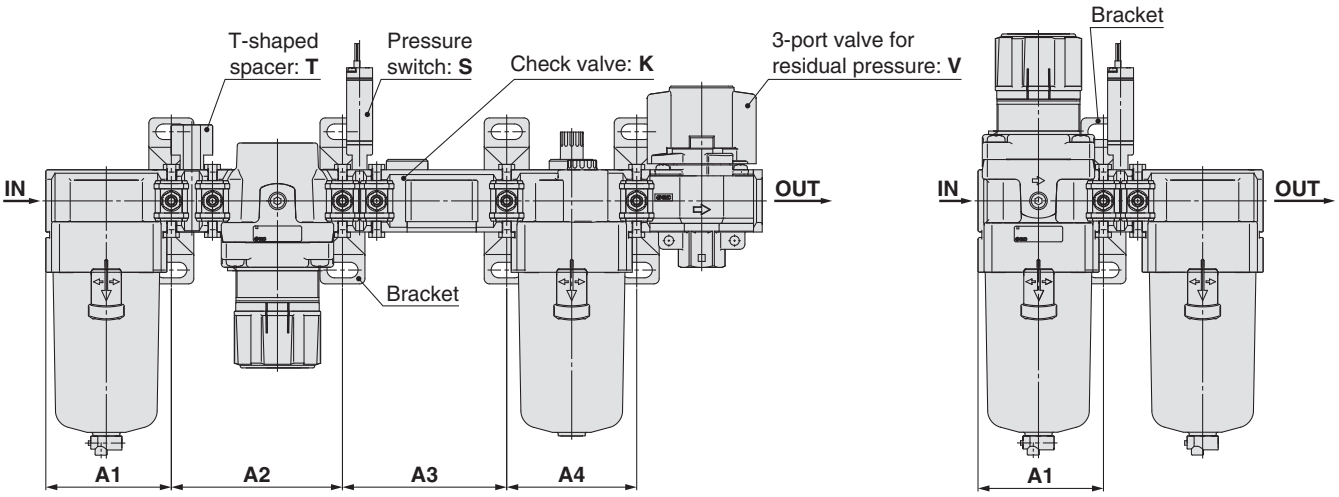

Attachment / Model	K			S		T		V			KS			KT			KV				KST		
	A1	A2	A3	A1	A2	A1	A2	A1	A2	A3	A1	A2	A3	A1	A2	A3	A1	A2	A3	A4	A1	A2	A3
AC20-A	41.6	43.2	43.2	41.6	43.2	41.6	61	41.6	43.2	43.2	41.6	43.2	57	41.6	61	43.2	41.6	43.2	43.2	43.2	41.6	61	57
AC25-A	55.1	57.2	57.2	55.1	57.2	55.1	76	55.1	57.2	57.2	55.1	57.2	74	55.1	76	57.2	55.1	57.2	57.2	57.2	55.1	76	74
AC30-A	55.1	57.2	57.2	55.1	57.2	55.1	76	55.1	57.2	57.2	55.1	57.2	74	55.1	76	57.2	55.1	57.2	57.2	57.2	55.1	76	74
AC40-A	72.6	75.2	75.2	72.6	75.2	72.6	99	72.6	75.2	75.2	72.6	75.2	95	72.6	99	75.2	72.6	75.2	75.2	75.2	72.6	99	95
AC40-06-A	—	—	—	77.6	80.2	77.6	104	77.6	80.2	80.2	—	—	—	—	—	—	—	—	—	—	—	—	—

Attachment / Model	KSV				KTV				KSTV				ST		SV			STV			TV		
	A1	A2	A3	A4	A1	A2	A3	A4	A1	A2	A3	A4	A1	A2	A1	A2	A3	A1	A2	A3	A1	A2	A3
AC20-A	41.6	43.2	57	43.2	41.6	61	43.2	43.2	41.6	61	57	43.2	41.6	61	41.6	43.2	57	41.6	61	57	41.6	61	43.2
AC25-A	55.1	57.2	74	57.2	55.1	76	57.2	57.2	55.1	76	74	57.2	55.1	76	55.1	57.2	74	55.1	76	74	55.1	76	57.2
AC30-A	55.1	57.2	74	57.2	55.1	76	57.2	57.2	55.1	76	74	57.2	55.1	76	55.1	57.2	74	55.1	76	74	55.1	76	57.2
AC40-A	72.6	75.2	95	75.2	72.6	99	75.2	75.2	72.6	99	95	75.2	72.6	99	72.6	75.2	95	72.6	99	95	72.6	99	75.2
AC40-06-A	—	—	—	—	—	—	—	—	—	—	—	—	77.6	104	77.6	80.2	102	77.6	104	102	77.6	104	80.2

Attachment / Model	K		S	V		KS		KV			KSV			SV	
	A1	A2	A1	A1	A2	A1	A2	A1	A2	A3	A1	A2	A3	A1	A2
AC20A-A	41.6	43.2	41.6	41.6	43.2	41.6	57	41.6	43.2	43.2	41.6	57	43.2	41.6	57
AC30A-A	55.1	57.2	55.1	55.1	57.2	55.1	74	55.1	57.2	57.2	55.1	74	57.2	55.1	74
AC40A-A	72.6	75.2	72.6	72.6	75.2	72.6	95	72.6	75.2	75.2	72.6	95	75.2	72.6	95
AC40A-06-A	—	—	77.6	77.6	80.2	—	—	—	—	—	—	—	—	77.6	102

Attachment / Model	S	T	V		V1		SV		SV1		TV		TV1	
	A1	A1	A1	A2	A1	A2	A1	A2	A1	A2	A1	A2	A1	A2
AC20B-A	41.6	41.6	41.6	43.2	41.6	43.2	41.6	57	41.6	43.2	41.6	61	41.6	43.2
AC25B-A	55.1	55.1	55.1	57.2	55.1	57.2	55.1	74	55.1	57.2	55.1	76	55.1	57.2
AC30B-A	55.1	55.1	55.1	57.2	55.1	57.2	55.1	74	55.1	57.2	55.1	76	55.1	57.2
AC40B-A	72.6	72.6	72.6	75.2	72.6	75.2	72.6	95	72.6	75.2	72.6	99	72.6	75.2
AC40B-06-A	77.6	77.6	77.6	80.2	77.6	80.2	77.6	102	77.6	80.2	77.6	104	77.6	80.2

Attachment / Model	S		T		V			V1			SV			SV1			TV			TV1		
	A1	A2	A1	A2	A1	A2	A3	A1	A2	A3	A1	A2	A3	A1	A2	A3	A1	A2	A3	A1	A2	A3
AC20C-A	41.6	43.2	41.6	43.2	41.6	43.2	43.2	41.6	43.2	43.2	41.6	43.2	57	41.6	43.2	43.2	41.6	43.2	61	41.6	43.2	43.2
AC25C-A	55.1	57.2	55.1	57.2	55.1	57.2	57.2	55.1	57.2	57.2	55.1	57.2	74	55.1	57.2	57.2	55.1	57.2	76	55.1	57.2	57.2
AC30C-A	55.1	57.2	55.1	57.2	55.1	57.2	57.2	55.1	57.2	57.2	55.1	57.2	74	55.1	57.2	57.2	55.1	57.2	76	55.1	57.2	57.2
AC40C-A	72.6	75.2	72.6	75.2	72.6	75.2	75.2	72.6	75.2	75.2	72.6	75.2	95	72.6	75.2	75.2	72.6	75.2	99	72.6	75.2	75.2
AC40C-06-A	77.6	80.2	77.6	80.2	77.6	80.2	80.2	77.6	80.2	80.2	77.6	80.2	102	77.6	80.2	80.2	77.6	80.2	104	77.6	80.2	80.2

Attachment / Model	S	V		V1		SV		SV1	
	A1	A1	A2	A1	A2	A1	A2	A1	A2
AC20D-A	41.6	41.6	43.2	41.6	43.2	41.6	57	41.6	43.2
AC30D-A	55.1	55.1	57.2	55.1	57.2	55.1	74	55.1	57.2
AC40D-A	72.6	72.6	75.2	72.6	75.2	72.6	95	72.6	75.2
AC40D-06-A	77.6	77.6	80.2	77.6	80.2	77.6	102	77.6	80.2

A1: Dimensions from the end of the IN side to the center of the mounting hole for the first bracket.
A2: Mounting hole pitch between the first and the second brackets.
A3: Mounting hole pitch between the second and the third brackets.
A4: Mounting hole pitch between the third and the fourth brackets.

Modular Type
Air Filters
Series AF/AFM/AFD

	Model	Port size	Filtration µm	Options
Air Filter Series AF **P.29 to 35**	**AF20-A**	1/8, 1/4	5	Bracket Float type auto drain
	AF30-A	1/4, 3/8		
	AF40-A	1/4, 3/8, 1/2		
	AF40-06-A	3/4		
Mist Separator Series AFM **P.37 to 42**	**AFM20-A**	1/8, 1/4	0.3	Bracket Float type auto drain
	AFM30-A	1/4, 3/8		
	AFM40-A	1/4, 3/8, 1/2		
	AFM40-06-A	3/4		
Micro Mist Separator Series AFD 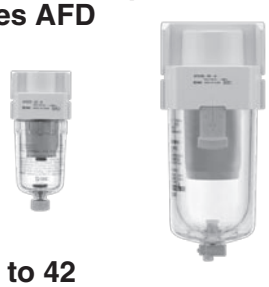 **P.37 to 42**	**AFD20-A**	1/8, 1/4	0.01	Bracket Float type auto drain
	AFD30-A	1/4, 3/8		
	AFD40-A	1/4, 3/8, 1/2		
	AFD40-06-A	3/4		

Air Filter

AF20-A to AF40-A

JIS Symbol

Air Filter

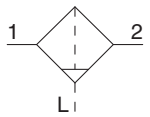

Air Filter with Auto Drain

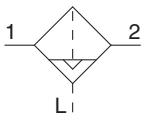

AF20-A

AF40-A

How to Order

AF 30 – ☐ 03 BD – ☐ –A

❶ ❷ ❸ ❹ ❺

- Option/Semi-standard: Select one each for **a** to **f**.
- Option/Semi-standard symbol: When more than one specification is required, indicate in alphanumeric order.

Example) AF30-03BD-CR-A

			Symbol	Description	❶ Body size 20	30	40
❷	Thread type		**Nil**	Rc	●	●	●
			N Note 1)	NPT	●	●	●
			F Note 2)	G	●	●	●
			+				
❸	Port size		**01**	1/8	●	—	—
			02	1/4	●	●	●
			03	3/8	—	●	●
			04	1/2	—	—	●
			06	3/4	—	—	●
			+				
❹ Option	**a**	Mounting	**Nil**	Without mounting option	●	●	●
			B Note 3)	With bracket	●	●	●
			+				
	b	Float type auto drain	**Nil**	Without auto drain	●	●	●
			C Note 4)	N.C. (Normal close) Drain port is closed when pressure is not applied.	●	●	●
			D Note 5)	N.O. (Normal open) Drain port is open when pressure is not applied.	—	●	●
			+				
❺ Semi-standard	**c**	Bowl Note 6)	**Nil**	Polycarbonate bowl	●	●	●
			C	With bowl guard	●	—Note 7)	—Note 7)
			+				
	d	Drain port	**Nil**	With drain cock	●	●	●
			J Note 8)	Drain guide1/8	●	—	—
				Drain guide1/4	—	●	●
			W	Drain cock with barb fitting (for ø6 x ø4 nylon tube)	—	●	●
			+				
	e	Flow direction	**Nil**	Flow direction: Left to right	●	●	●
			R	Flow direction: Right to left	●	●	●
			+				
	f	Pressure unit	**Nil**	Name plate and caution plate for bowl in imperial units: MPa	●	●	●
			Z Note 9)	Name plate and caution plate for bowl in imperial units: psi, °F	○Note 10)	○Note 10)	○Note 10)

Note 1) Drain guide is NPT1/8 (applicable to the AF20-A) and NPT1/4 (applicable to the AF30-A to AF40-A).
The auto drain port comes with ø3/8" One-touch fitting (applicable to the AF30-A to AF40-A).
Note 2) Drain guide is G1/8 (applicable to the AF20-A) and G1/4 (applicable to the AF30-A to AF40-A).
Note 3) A bracket is not assembled and supplied loose at the time of shipment. Including 2 mounting screws.
Note 4) When pressure is not applied, condensate which does not start the auto drain mechanism will be left in the bowl. Releasing the residual condensate before ending operations for the day is recommended.
Note 5) If the compressor is small (0.75 kW, discharge flow is less than 100 L/min[ANR]), air leakage from the drain cock may occur during start of operations. N.C. type is recommended.
Note 6) Refer to Chemical data on page 32 for chemical resistance of the bowl.
Note 7) Standard material (polycarbonate)
Note 8) Without a valve function.
Note 9) For thread type: NPT. This product is for overseas use only according to the new Measurement Law.
(The SI unit type is provided for use in Japan.)
Note 10) ○: For thread type: NPT only

Standard Specifications

Model	AF20-A	AF30-A	AF40-A	AF40-06-A
Port size	1/8, 1/4	1/4, 3/8	1/4, 3/8, 1/2	3/4
Fluid	Air			
Ambient and fluid temperature	–5 to 60°C (with no freezing)			
Proof pressure	1.5 MPa			
Maximum operating pressure	1.0 MPa			
Nominal filtration rating	5 μm			
Drain capacity (cm³)	8	25	45	
Bowl material	Polycarbonate			
Bowl guard	Semi-standard (Steel)	Standard (Polycarbonate)		
Weight (kg)	0.08	0.18	0.36	0.41

Options/Part No.

Optional specifications		Model			
		AF20-A	**AF30-A**	**AF40-A**	**AF40-06-A**
Bracket assembly[Note 1)]		AF22P-050AS	AF32P-050AS	AF42P-050AS	AF42P-070AS
Float type auto drain[Note 2) Note 3)]	**N.C.**	AD27-A	AD37-A	AD47-A	
	N.O.	—	AD38-A	AD48-A	

Semi-standard/Bowl Assembly Part No.

Semi-standard specifications						Model			
Bowl material	Float type auto drain[Note 2) Note 3)]		With drain guide[Note 3)]	With barb fitting	With bowl guard	**AF20-A**	**AF30-A**	**AF40-A**	**AF40-06-A**
	N.C.	N.O.							
Polycarbonate bowl	—	—	—	—	●	C2SF-C-A	—	—	
	●	—	—	—	●	AD27-C-A	—	—	
	—	—	●	—	—	C2SF-J-A	C3SF-J-A	C4SF-J-A	
	—	—	—	●	—	—	C3SF-W-A	C4SF-W-A	
	—	—	●	—	●	C2SF-CJ-A	—	—	

Note 1) Assembly of a bracket and 2 mounting screws.
Note 2) Minimum operating pressure: N.O. type–0.1 MPa; N.C. type–0.1 MPa (AD27-A) and 0.15 MPa (AD37-A/47-A).
Please consult with SMC separately for psi and °F unit display specifications.
Note 3) Please consult with SMC for details on drain piping to fit NPT or G port sizes.
Note) Bowl assembly for the AF20-A to AF40-A models comes with a bowl O-ring.

Flow Characteristics (Representative values)

AF20-A Rc1/4

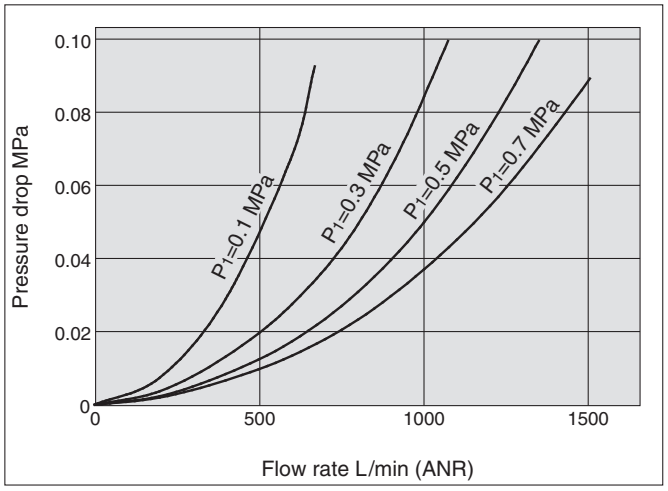

AF30-A Rc3/8

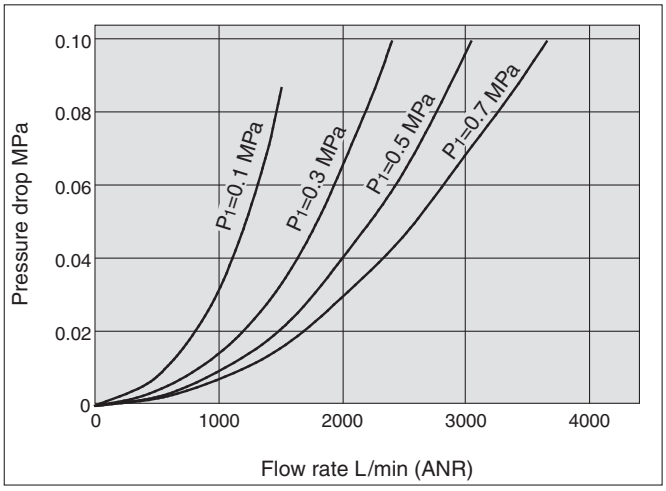

AF40-A Rc1/2

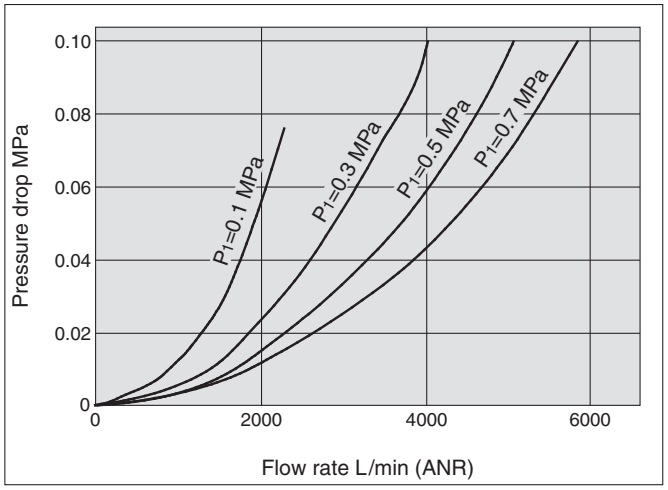

AF40-06-A Rc3/4

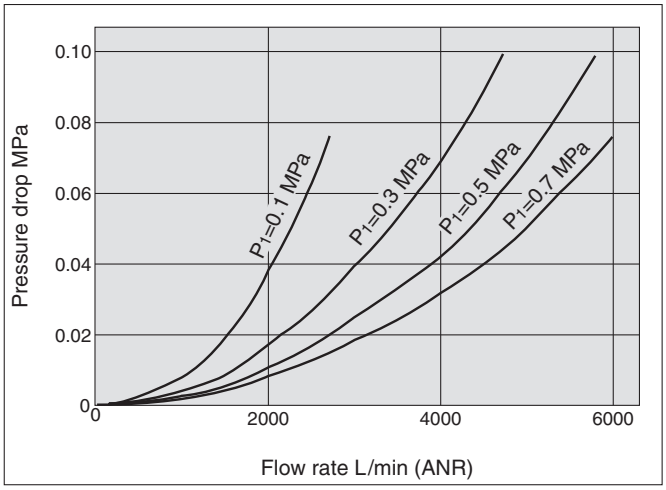

⚠ Specific Product Precautions

Be sure to read before handling. Refer to back cover for Safety Instructions, "Handling Precautions for SMC Products" (M-E03-3) and the Operation Manual for F.R.L. Precautions.
Please download it via our website, http://www.smcworld.com

Design / Selection

⚠ Warning

1. The standard bowl for the air filter, filter regulator, and lubricator, as well as the sight dome for the lubricator and bowl guard are made of polycarbonate. Do not use in an environment where they are exposed to or come in contact with organic solvents, chemicals, cutting oil, synthetic oil, alkali, and thread lock solutions.

Effects of atmosphere of organic solvents and chemicals, and where these elements are likely to adhere to the equipment.
Chemical data for substances causing degradation (Reference)

Type	Chemical name	Application examples	Material Polycarbonate
Acid	Hydrochloric acid Sulfuric acid, Phosphoric acid Chromic acid	Acid washing liquid for metals	△
Alkaline	Sodium hydroxide (Caustic soda) Potash Calcium hydroxide (Slack lime) Ammonia water Carbonate of soda	Degreasing of metals Industrial salts Water-soluble cutting oil	×
Inorganic salts	Sodium sulfide Sulfate of potash Sulfate of soda	—	×
Chlorine solvents	Carbon tetrachloride Chloroform Ethylene chloride Methylene chloride	Cleansing liquid for metals Printing ink Dilution	×
Aromatic series	Benzene Toluene Paint thinner	Coatings Dry cleaning	×
Ketone	Acetone Methyl ethyl ketone Cyclohexane	Photographic film Dry cleaning Textile industries	×
Alcohol	Ethyl alcohol IPA Methyl alcohol	Antifreeze Adhesives	△
Oil	Gasoline Kerosene	—	×
Ester	Phthalic acid dimethyl Phthalic acid dimethyl Acetic acid	Synthetic oil Anti-rust additives	×
Ether	Methyl ether Ethyl ether	Brake oil additives	×
Amino	Methyl amino	Cutting oil Brake oil additives Rubber accelerator	×
Other	Thread-lock fluid Seawater Leak tester	—	×
△ : Some effects may occur × : Effects will occur			

Maintenance

⚠ Warning

1. Replace the element every 2 years or when the pressure drop becomes 0.1 MPa, whichever comes first, to prevent damage to the element.

Mounting and Adjustment

⚠ Caution

1. When the bowl is installed on the air filter, install them so that the lock button lines up to the groove of the front (or the back) of the body to avoid drop or damage of the bowl.

Working Principle: Float Type Auto Drain

N.O.type: AD38-A, AD48-A

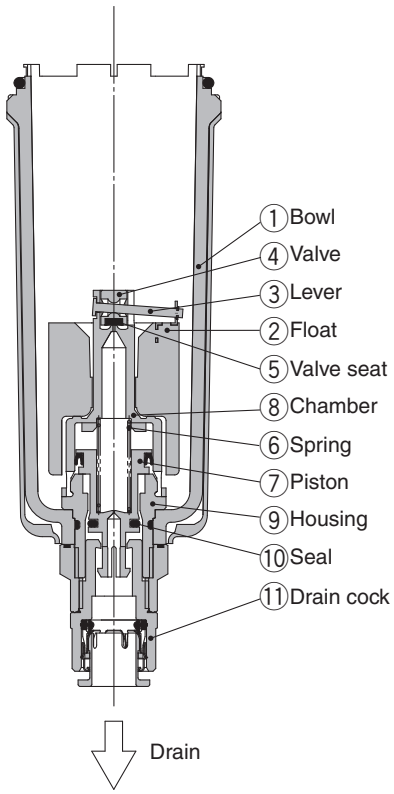

- **When pressure inside the bowl is released:**
  When pressure is released from the bowl ①, piston ⑦ is lowered by spring ⑥.
  The sealing action of seal ⑩ is interrupted, and the outside air flows inside the bowl ① through housing hole ⑨ and drain cock ⑪.
  Therefore, if there is an accumulation of condensate in the bowl ①, it will drain out through the drain cock.
- **When pressure is applied inside the bowl:**
  When pressure exceeds 0.1 MPa, the force of piston ⑦ surpasses the force of spring ⑥, and the piston goes up.
  This pushes seal ⑩ up so that it creates a seal, and the inside of the bowl ①, is shut off from the outside air.
  If there is no accumulation of condensate in the bowl ① at this time, float ② will be pulled down by its own weight, causing valve ④, which is connected to lever ③, to seal valve seat ⑤.
- **When there is an accumulation of condensate in the bowl:**
  Float ② rises due to its own buoyancy and pushes open the seal created by the valve seat ⑤.
  This allows the pressure inside the bowl ① to enter the chamber ⑧. The result is that the combined pressure inside chamber ⑧ and the force of the spring ⑥ lowers the piston ⑦.
  This causes the sealing action of seal ⑩ to be interrupted, and the accumulated condensate in the bowl ① drains out through the drain cock ⑪.
  Turning drain cock ⑪ manually counterclockwise lowers piston ⑦, which pushes open the seal created by seal ⑩, thus allowing the condensate to drain out.

N.C.type: AD37-A, AD47-A

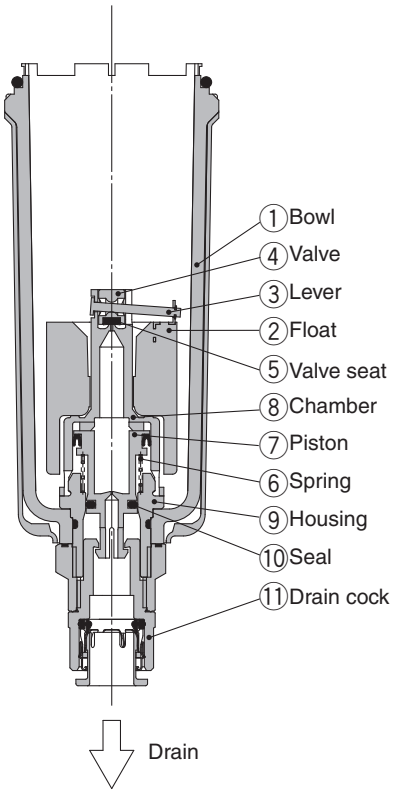

- **When pressure inside the bowl is released:**
  Even when pressure inside the bowl ① is released, spring ⑥ keeps piston ⑦ in its upward position.
  This keeps the seal created by the seal ⑩ in place; thus, the inside of the bowl ① is shut off from the outside air.
  Therefore, even if there is an accumulation of condensate in the bowl ①, it will not drain out.
- **When pressure is applied inside the bowl:**
  Even when pressure is applied inside the bowl ①, the combined force of spring ⑥ and the pressure inside the bowl ① keeps piston ⑦ in its upward position.
  This maintains the seal created by the seal ⑩ in place; thus, the inside of the bowl ① is shut off from the outside air.
  If there is no accumulation of condensate in the bowl ① at this time float ② will be pulled down by its own weight, causing valve ④, which is connected to lever ③, to seal valve seat ⑤.
- **When there is an accumulation of condensate in the bowl:**
  Float ② rises due to its own buoyancy and pushes open the seal created by the valve seat ⑤. Pressure passes from the bowl ① to chamber ⑧.
  The result is that the pressure inside chamber ⑧ surpasses the force of the spring ⑥ and pushes piston ⑦ downwards.
  This causes the sealing action of seal ⑩ to be interrupted and the accumulated condensate in the bowl ① drains out through the drain cock ⑪.
  Turning drain cock ⑪ manually counterclockwise lowers piston ⑦, which pushes open the seal created by seal ⑩, thus allowing the condensate to drain out.

Compact auto drain N.C. type: AD27-A

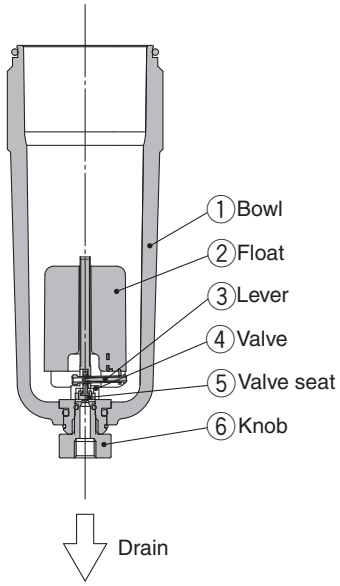

- **When pressure inside the bowl is released:**
  Even when pressure inside the bowl ① is released, the weight of the float ② causes valve ④, which is connected to lever ③, to seal valve seat ⑤. As a result, the inside of the bowl ① is shut off from the outside air.
  Therefore, even if there is an accumulation of condensate in the bowl ①, it will not drain out.
- **When pressure is applied inside the bowl:**
  Even when pressure is applied inside the bowl ①, the weight of the float ② and the differential pressure that is applied to valve ④ cause valve ④ to seal valve seat ⑤, and the outside air is shut off from the inside of the bowl ①.
- **When the drain is accumulated in the bowl:**
  Float ② rises due to its own buoyancy and the seal at valve seat ⑤ is interrupted.
  The condensate inside the bowl ① drains out through the knob ⑥.
  Turning knob ⑥ manually counterclockwise lowers it and causes the sealing action of valve seat ⑤ to be interrupted, which allows the condensate to drain out.

Construction

AF20-A

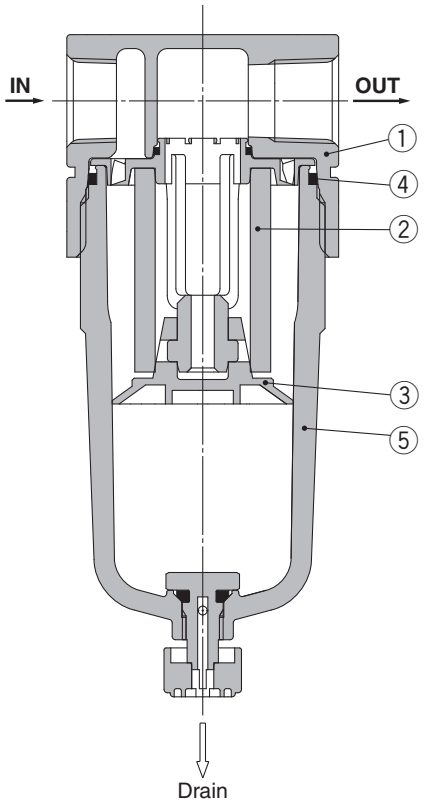

AF30-A to AF40-06-A

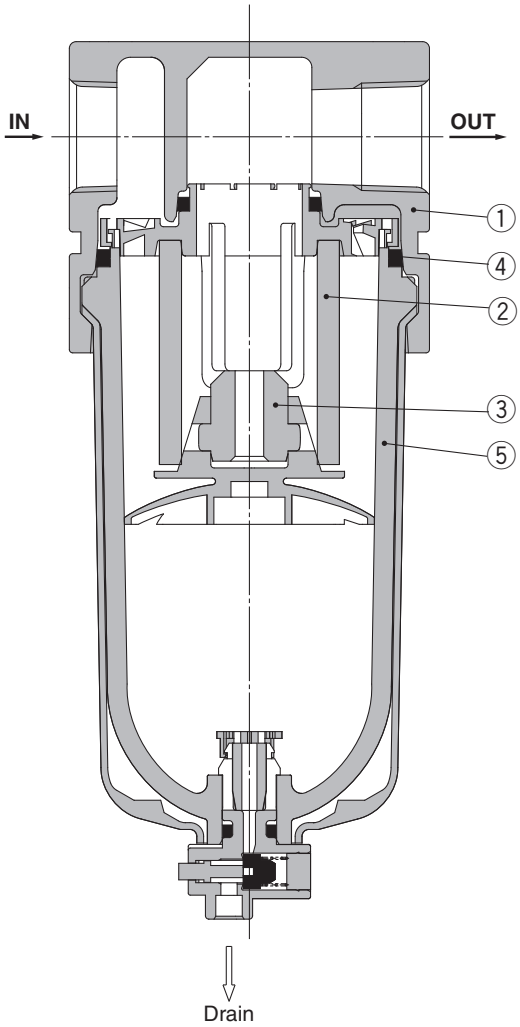

Component Parts

No.	Description	Material	Color
1	**Body**	Aluminum die-cast	White

Replacement Parts

No.	Description	Material	Part no.			
			AF20-A	**AF30-A**	**AF40-A**	**AF40-06-A**
2	**Filter element**	Non-woven fabric	AF20P-060S	AF30P-060S	AF40P-060S	
3	**Baffle**	PBT	AF22P-040S	AF32P-040S	AF42P-040S	
4	**Bowl O-ring**	NBR	C2SFP-260S	C32FP-260S	C42FP-260S	
5	**Bowl assembly** Note)	Polycarbonate	C2SF-A	C3SF-A	C4SF-A	

Note) Bowl O-ring is included. Please contact SMC regarding the bowl assembly supply for psi and °F unit specifications.

Dimensions

AF20-A

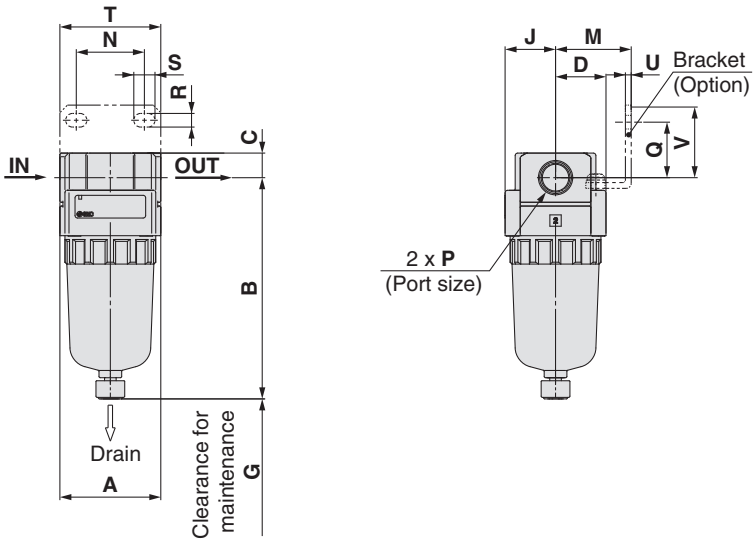

AF30-A to AF40-06-A

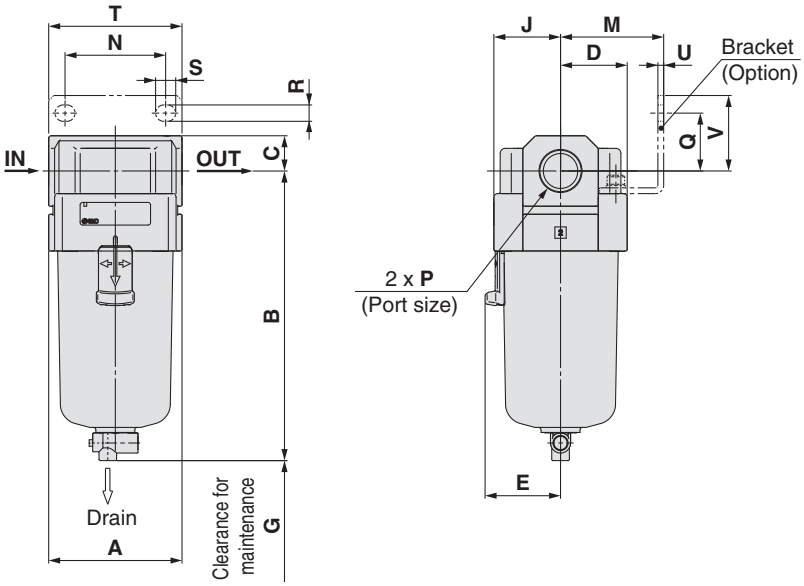

Applicable model	AF20-A		AF30-A to AF40-06-A		
Optional/Semi-standard specifications	With auto drain (N.C.)	With drain guide	With auto drain (N.O./N.C.)	With drain guide	Drain cock with barb fitting
Dimensions	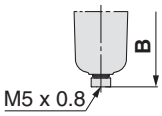	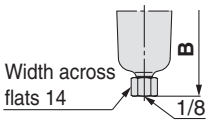	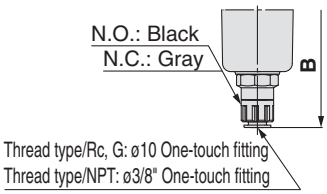	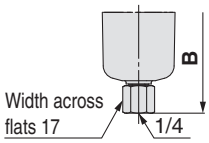	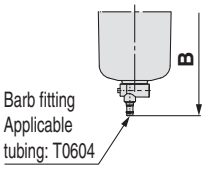

Model	Standard specifications								Optional specifications								
									Bracket mount								With auto drain
	P	A	B	C	D	E	G	J	M	N	Q	R	S	T	U	V	B
AF20-A	1/8, 1/4	40	87.6	9.8	20	—	25	20	30	27	22	5.4	8.4	40	2.3	28	104.9
AF30-A	1/4, 3/8	53	115.1	14	26.7	30	35	26.7	41	40	23	6.5	8	53	2.3	30	156.8
AF40-A	1/4, 3/8, 1/2	70	147.1	18	35.5	38.4	40	35.5	50	54	26	8.5	10.5	70	2.3	35	186.9
AF40-06-A	3/4	75	149.1	20	35.5	38.4	40	35.5	50	54	25	8.5	10.5	70	2.3	34	188.9

Model	Semi-standard specifications	
	With barb fitting	With drain guide
	B	B
AF20-A	—	91.4
AF30-A	123.6	121.9
AF40-A	155.6	153.9
AF40-06-A	157.6	155.9

Mist Separator
AFM20-A to AFM40-A
Micro Mist Separator
AFD20-A to AFD40-A

JIS Symbol

Mist Separator

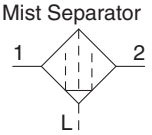

Micro Mist Separator

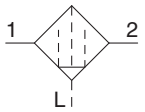

AFM20-A

AFM40-A

AFD20-A

AFD40-A

- **Series AFM Nominal filtration rating: 0.3 μm**
- **Series AFD Nominal filtration rating: 0.01 μm**

How to Order

AFM 30 – ☐ 03 BD – ☐ –A

AFD 30 – ☐ 03 BD – ☐ –A

❶ ❷ ❸ ❹ ❺

- Option/Semi-standard: Select one each for **a** to **f**.
- Option/Semi-standard symbol: When more than one specification is required, indicate in alphanumeric order.

Example) AFM30-03BD-CR-A

			Symbol	Description	❶ Body size 20	30	40
❷	Thread type		Nil	Rc	●	●	●
			N Note 1)	NPT	●	●	●
			F Note 2)	G	●	●	●
			+				
❸	Port size		01	1/8	●	—	—
			02	1/4	●	●	●
			03	3/8	—	●	●
			04	1/2	—	—	●
			06	3/4	—	—	●
			+				
❹	Option	a Mounting	Nil	Without mounting option	●	●	●
			B Note 3)	With bracket	●	●	●
			+				
		b Float type auto drain	Nil	Without auto drain	●	●	●
			C Note 4)	N.C. (Normal close) Drain port is closed when pressure is not applied.	●	●	●
			D Note 5)	N.O. (Normal open) Drain port is open when pressure is not applied.	—	●	●
			+				
❺	Semi-standard	c Bowl Note 6)	Nil	Polycarbonate bowl	●	●	●
			C	With bowl guard	●	— Note 7)	— Note 7)
			+				
		d Drain port	Nil	With drain cock	●	●	●
			J Note 8)	Drain guide 1/8	●	—	—
				Drain guide 1/4	—	●	●
			W	Drain cock with barb fitting (for ø6 x ø4 nylon tube)	—	●	●
			+				
		e Flow direction	Nil	Flow direction: Left to right	●	●	●
			R	Flow direction: Right to left	●	●	●
			+				
		f Pressure unit	Nil	Name plate and caution plate for bowl in imperial units: MPa	●	●	●
			Z Note 9)	Name plate and caution plate for bowl in imperial units: psi, °F	○ Note 10)	○ Note 10)	○ Note 10)

Note 1) Drain guide is NPT1/8 (applicable to the AFM20-A, AFD20-A) and NPT1/4 (applicable to the AFM30-A/40-A, AFD30-A/40-A).
The auto drain port comes with ø3/8" One-touch fitting (applicable to the AFM30-A/40-A, AFD30-A/40-A).
Note 2) Drain guide is G1/8 (applicable to the AFM20-A, AFD20-A) and G1/4 (applicable to the AFM30-A/40-A, AFD30-A/40-A).
Note 3) A bracket is not assembled and supplied loose at the time of shipment. Including 2 mounting screws
Note 4) When pressure is not applied, condensate which does not start the auto drain mechanism will be left in the bowl. Releasing the residual condensate before ending operations for the day is recommended.
Note 5) If the compressor is small (0.75 kW, discharge flow is less than 100 L/min[ANR]), air leakage from the drain cock may occur during start of operations. N.C. type is recommended.
Note 6) Refer to Chemical data on page 40 for chemical resistance of the bowl.
Note 7) Standard material (polycarbonate)
Note 8) Without a valve function.
Note 9) For thread type: NPT. This product is for overseas use only according to the new Measurement Law. (The SI unit type is provided for use in Japan.)
Note 10) ○: For thread type: NPT only

Standard Specifications

Model		AFM20-A AFD20-A	AFM30-A AFD30-A	AFM40-A AFD40-A	AFM40-06-A AFD40-06-A
Port size		1/8, 1/4	1/4, 3/8	1/4, 3/8, 1/2	3/4
Fluid		Air			
Ambient and fluid temperature		– 5 to 60°C (with no freezing)			
Proof pressure		1.5 MPa			
Maximum operating pressure		1.0 MPa			
Minimum operating pressure		0.05 MPa			
Nominal filtration rating	**AFM20-A to AFM40-06-A**	0.3 μm (99.9% filtered particle size)			
	AFD20-A to AFD40-06-A	0.01 μm (99.9% filtered particle size)			
Outlet side oil mist concentration	**AFM20-A to AFM40-06-A**	MAX 1.0 mg/m³ (ANR) (≈0.8 ppm) Note 2) Note 3)			
	AFD20-A to AFD40-06-A	MAX 0.1 mg/m³ (ANR) (Before saturated with oil 0.01 mg/m³ (ANR) or less ≈ 0.008 ppm) Note 2) Note 3)			
Rated flow (L/min (ANR)) Note 1)	**AFM20-A to AFM40-06-A**	200	450	1100	
	AFD20-A to AFD40-06-A	120	240	600	
Drain capacity (cm³)		8	25	45	
Bowl material		Polycarbonate			
Bowl guard		Semi-standard (Steel)	Standard (Polycarbonate)		
Weight (kg)		0.09	0.19	0.38	0.43

Note 1) Conditions: Inlet pressure: 0.7 MPa; The rated flow varies depending on the inlet pressure. Keep the air flow within the rated flow to prevent an outflow of lubricant to the outlet side.
Note 2) When the compressor oil mist discharge concentration is 30 mg/m³ (ANR).
Note 3) Bowl O-ring and other O-rings are slightly lubricated.

Options/Part No.

Optional specifications		Model			
		AFM20-A AFD20-A	AFM30-A AFD30-A	AFM40-A AFD40-A	AFM40-06-A AFD40-06-A
Bracket assembly Note 1)		AF22P-050AS	AF32P-050AS	AF42P-050AS	AF42P-070AS
Float type auto drain Note 2) Note 3)	**N. C.**	AD27-A	AD37-A	AD47-A	
	N. O.	—	AD38-A	AD48-A	

Semi-standard/Bowl Assembly Part No.

Semi-standard specifications						Model			
Bowl material	Float type auto drain Note 2) Note 3)		With drain guide Note 3)	With barb fitting	With bowl guard	AFM20-A AFD20-A	AFM30-A AFD30-A	AFM40-A AFD40-A	AFM40-06-A AFD40-06-A
	N. C.	N. O.							
Polycarbonate	—	—	—	—	●	C2SF-C-A	—	—	
	●	—	—	—	●	AD27-C-A	—	—	
	—	—	●	—	—	C2SF-J-A	C3SF-J-A	C4SF-J-A	
	—	—	—	●	—	—	C3SF-W-A	C4SF-W-A	
	—	—	●	—	●	C2SF-CJ-A	—	—	

Note 1) Assembly of a bracket and 2 mounting screws.
Note 2) Minimum operating pressure: N.O. type–0.1 MPa; N.C. type–0.1 MPa (AD27-A) and 0.15 MPa (AD37-A/47-A), Please consult with SMC separately for psi and °F unit display specifications.
Note 3) Please consult with SMC for details on drain piping to fit NPT or G port sizes.
Note 4) The bowl assembly includes the bowl O-ring.

Flow Characteristics (Representative values)

——— When saturated with oil
- - - - Initial state

AFM20-A

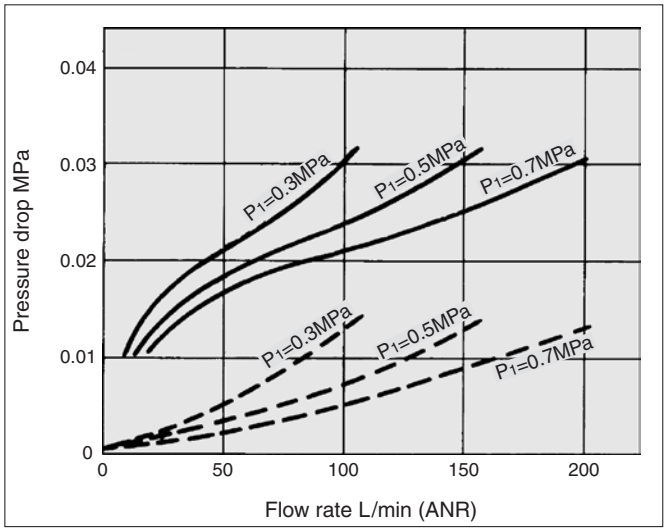

AFD20-A

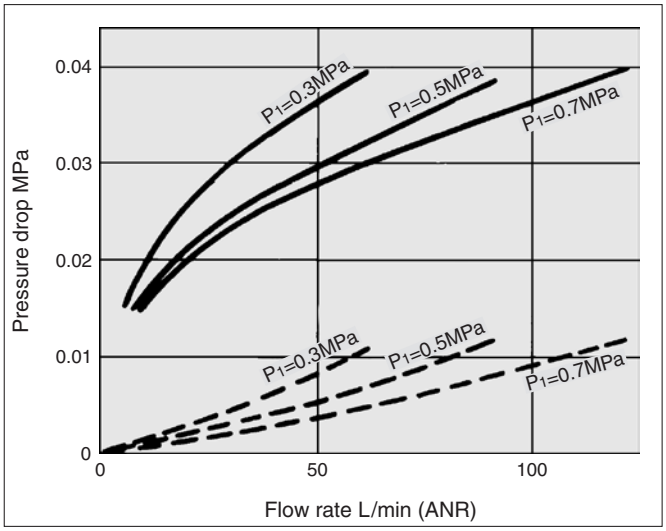

AFM30-A

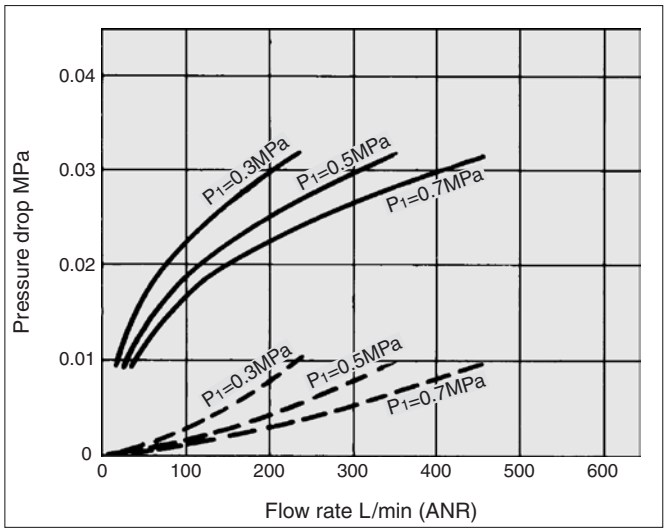

AFD30-A

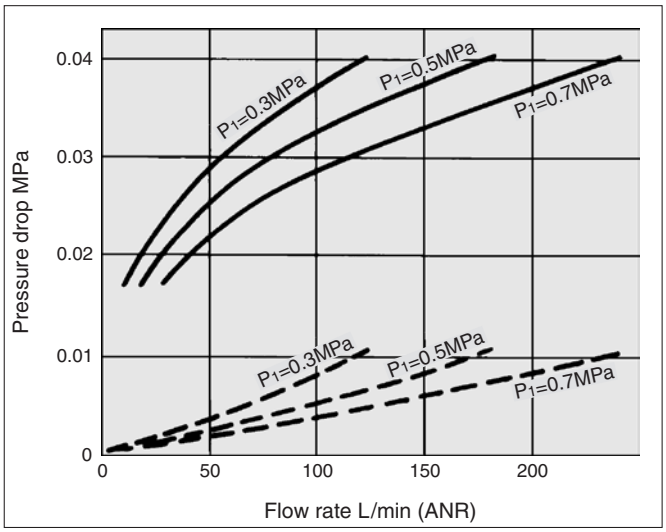

AFM40-A

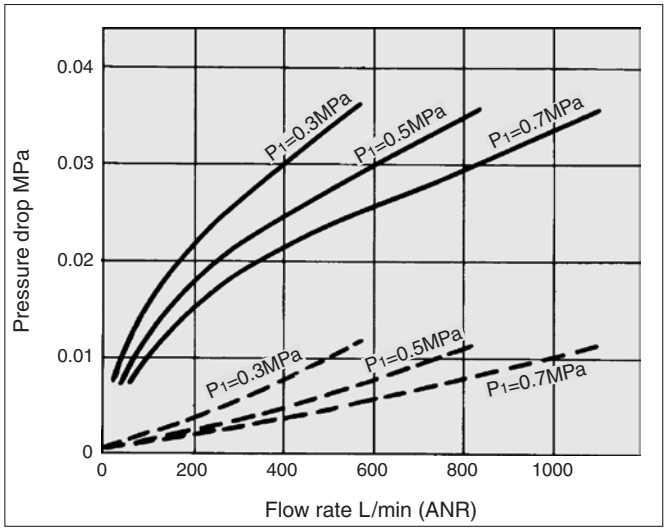

AFD40-A

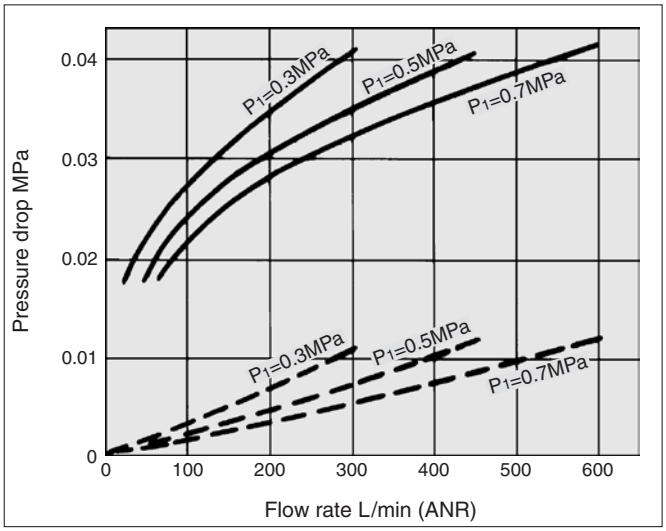

⚠ Specific Product Precautions

Be sure to read before handling. Refer to back cover for Safety Instructions, "Handling Precautions for SMC Products" (M-E03-3) and the Operation Manual for F.R.L. Precautions.
Please download it via our website, http://www.smcworld.com

Design / Selection

⚠ Warning

1. The standard bowl for the air filter, filter regulator, and lubricator, as well as the sight dome for the lubricator and bowl guard are made of polycarbonate. Do not use in an environment where they are exposed to or come in contact with organic solvents, chemicals, cutting oil, synthetic oil, alkali, and thread lock solutions.

Effects of atmosphere of organic solvents and chemicals, and where these elements are likely to adhere to the equipment.
Chemical data for substances causing degradation (Reference)

Type	Chemical name	Application examples	Material
			Polycarbonate
Acid	Hydrochloric acid Sulfuric acid, Phosphoric acid Chromic acid	Acid washing liquid for metals	△
Alkaline	Sodium hydroxide (Caustic soda) Potash Calcium hydroxide (Slack lime) Ammonia water Carbonate of soda	Degreasing of metals Industrial salts Water-soluble cutting oil	×
Inorganic salts	Sodium sulfide Sulfate of potash Sulfate of soda	—	×
Chlorine solvents	Carbon tetrachloride Chloroform Ethylene chloride Methylene chloride	Cleansing liquid for metals Printing ink Dilution	×
Aromatic series	Benzene Toluene Paint thinner	Coatings Dry cleaning	×
Ketone	Acetone Methyl ethyl ketone Cyclohexane	Photographic film Dry cleaning Textile industries	×
Alcohol	Ethyl alcohol IPA Methyl alcohol	Antifreeze Adhesives	△
Oil	Gasoline Kerosene	—	×
Ester	Phthalic acid dimethyl Phthalic acid dimethyl Acetic acid	Synthetic oil Anti-rust additives	×
Ether	Methyl ether Ethyl ether	Brake oil additives	×
Amino	Methyl amino	Cutting oil Brake oil additives Rubber accelerator	×
Other	Thread-lock fluid Seawater Leak tester	—	×
△: Some effects may occur ×: Effects will occur			

Air Supply

⚠ Caution

1. Install an air filter (Series AF) as a pre-filter on the inlet side of the mist separator to prevent premature clogging.
2. Install a mist separator (Series AFM) as a pre-filter on the inlet side of the micro mist separator to prevent premature clogging.
3. Do not install on the inlet side of the dryer as this can cause premature clogging of the element.

Maintenance

⚠ Warning

1. Replace the element every 2 years or when the pressure drop becomes 0.1 MPa, whichever comes first, to prevent damage to the element.

Mounting and Adjustment

⚠ Caution

1. When the bowl is installed on the mist separator, or micro mist separator, install them so that the lock button lines up to the groove of the front (or the back) of the body to avoid drop or damage of the bowl.

Design

⚠ Caution

1. Design the system so that the mist separator is installed in a pulsation-free location. The difference between internal and external pressure inside the element should be kept within 0.1 MPa, as exceeding this value could cause damage.

Selection

⚠ Caution

1. Do not allow air flow that exceeds the rated flow. If the air flow is allowed outside the range of the rated flow even momentarily, drainage and lubricant may splash at the outlet side or cause damage to the component.
2. Do not use in a low pressure application (such as a blower). F.R.L. unit has its own minimum operating pressure depending on the equipment and is designed specifically to function with compressed air. If used below the minimum operating pressure, a loss of performance and malfunction can occur. Please contact SMC if an application under such conditions cannot be avoided.

Construction

AFM20-A
AFD20-A

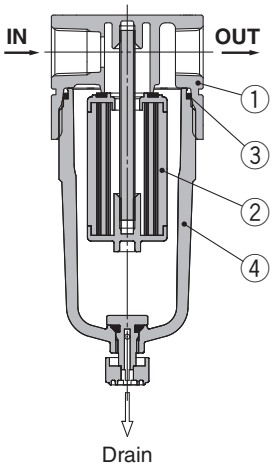

Float type auto drain (N.C.)

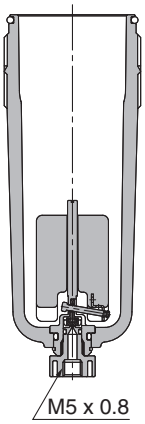

AFM30-A to AFM40-06-A
AFD30-A to AFD40-06-A

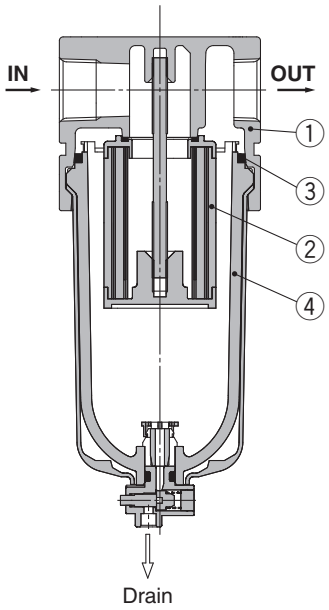

Float type auto drain

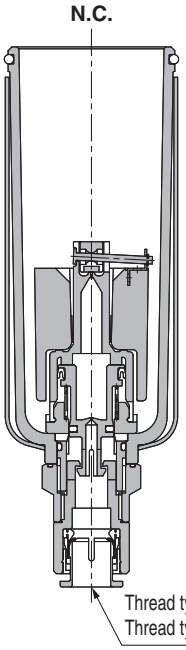

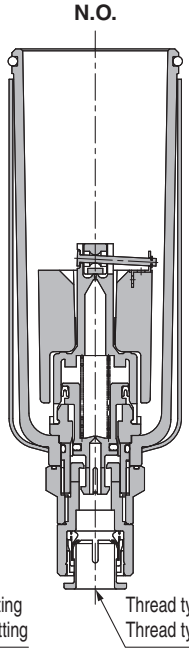

Component Parts

No.	Description	Material	Model	Color
1	**Body**	Aluminum die-cast	AFM20-A to AFM40-06-A AFD20-A to AFD40-06-A	White

Replacement Parts

No.	Description		Material	Part no.			
				AFM20-A AFD20-A	**AFM30-A AFD30-A**	**AFM40-A AFD40-A**	**AFM40-06-A AFD40-06-A**
2	**Element assembly**	AFM20 to 40	—	AFM20P-060AS	AFM30P-060AS	AFM40P-060AS	
		AFD20 to 40	—	AFD20P-060AS	AFD30P-060AS	AFD40P-060AS	
3	**Bowl seal**		NBR	C2SFP-260S	C32FP-260S	C42FP-260S	
4	**Bowl assembly** Note)		Polycarbonate	C2SF-A	C3SF-A	C4SF-A	

Note) Bowl seal is included. Please contact SMC regarding the bowl assembly supply for psi and °F unit specifications.

Dimensions

AFM20-A
AFD20-A

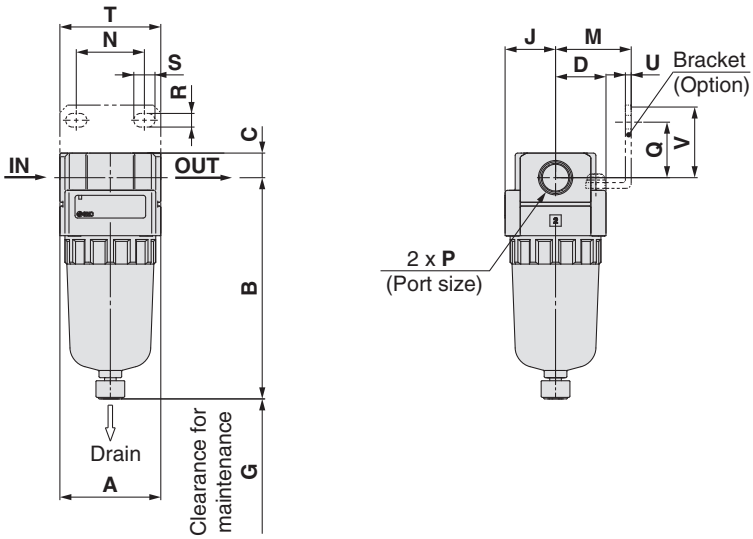

AFM30-A to AFM40-06-A
AFD30-A to AFD40-06-A

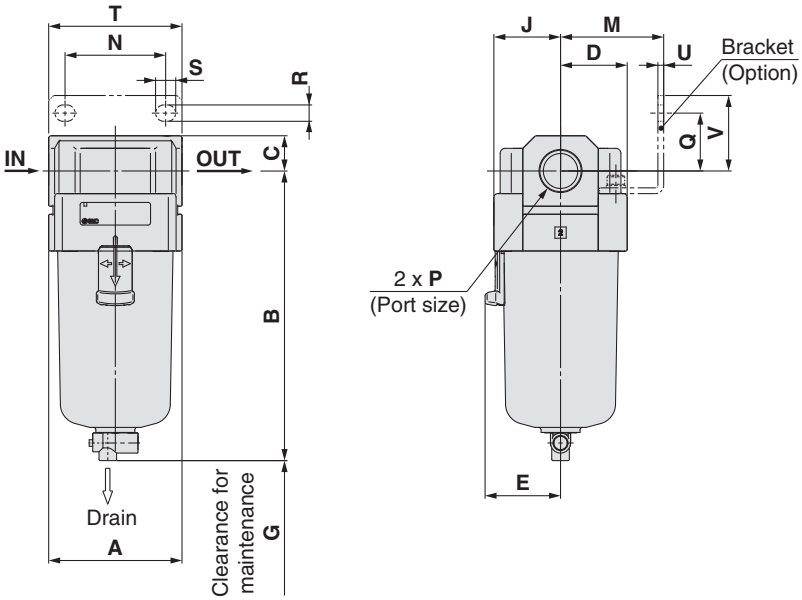

Applicable model	AFM20-A/AFD20-A		AFM30-A to AFM40-06-A/AFD30-A to AFD40-06-A		
Optional/Semi-standard specifications	With auto drain (N.C.)	With drain guide	With auto drain (N.O./N.C.)	With drain guide	Drain cock with barb fitting
Dimensions	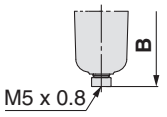	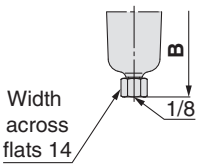	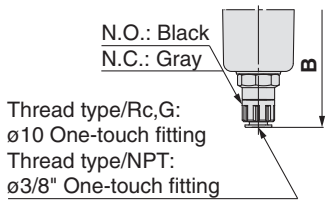	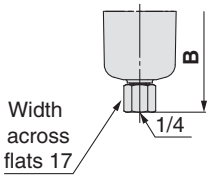	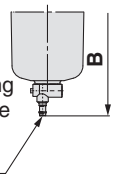

Model	Standard specifications								Optional specifications								
									Bracket mount								With auto drain
	P	A	B	C	D	E	G	J	M	N	Q	R	S	T	U	V	B
AFM20-A/AFD20-A	1/8, 1/4	40	87.6	9.8	20	—	40	20	30	27	22	5.4	8.4	40	2.3	28	104.9
AFM30-A/AFD30-A	1/4, 3/8	53	115.1	14	26.7	30	50	26.7	41	40	23	6.5	8	53	2.3	30	156.8
AFM40-A/AFD40-A	1/4, 3/8, 1/2	70	147.1	18	35.5	38.4	75	35.5	50	54	26	8.5	10.5	70	2.3	35	186.9
AFM40-06-A/AFD40-06-A	3/4	75	149.1	20	35.5	38.4	75	35.5	50	54	25	8.5	10.5	70	2.3	34	188.9

Model	Semi-standard specifications	
	With barb fitting	With drain guide
	B	B
AFM20-A/AFD20-A	—	91.4
AFM30-A/AFD30-A	123.6	121.9
AFM40-A/AFD40-A	155.6	153.9
AFM40-06-A/AFD40-06-A	157.6	155.9

Modular Type Regulators

Series AR

Regulator Series AR	Model	Port size	Options
	AR20-A	1/8, 1/4	Bracket Round type pressure gauge With set nut (for panel mount)*
	AR25-A	1/4, 3/8	
	AR30-A		
	AR40-A	1/4, 3/8, 1/2	
	AR40-06-A	3/4	
P.45 to 50			* Not interchangeable with existing AR Series.

Regulator
AR20-A to AR40-A

JIS Symbol
Regulator

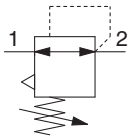

AR20-A

AR30-A

How to Order

AR 30 – ☐ 03 BG – ☐ -A
❶ ❷ ❸ ❹ ❺

- Option/Semi-standard: Select one each for **a** to **g**.
- Option/Semi-standard symbol: When more than one specification is required, indicate in alphanumeric order.

Example) AR30-03BG-1N-A

			Symbol	Description	❶ Body size 20	25	30	40
❷	Thread type		Nil	Rc	●	●	●	●
			N	NPT	●	●	●	●
			F	G	●	●	●	●
			+					
❸	Port size		01	1/8	●	—	—	—
			02	1/4	●	●	●	●
			03	3/8	—	●	●	●
			04	1/2	—	—	—	●
			06	3/4	—	—	—	●
			+					
❹	Option Note 1)	a Mounting	Nil	Without mounting option	●	●	●	●
			B Note 2)	With bracket	●	●	●	●
			H	With set nut (for panel fitting) Note 3)	●	●	●	●
			+					
		b Pressure gauge Note 4)	Nil	Without pressure gauge	●	●	●	●
			G	Round type pressure gauge (with limit indicator)	●	●	●	●
			M	Round type pressure gauge (with color zone)	●	●	●	●
			+					
❺	Semi-standard	c Set pressure Note 5)	Nil	0.05 to 0.7 MPa setting	●	●	●	●
			1	0.02 to 0.2 MPa setting	●	●	●	●
			+					
		d Exhaust mechanism	Nil	Relieving type	●	●	●	●
			N	Non-relieving type	●	●	●	●
			+					
		e Flow direction	Nil	Flow direction: Left to right	●	●	●	●
			R	Flow direction: Right to left	●	●	●	●
			+					
		f Knob	Nil	Downward	●	●	●	●
			Y	Upward	●	●	●	●
			+					
		g Pressure unit	Nil	Name plate and pressure gauge in imperial units: MPa	●	●	●	●
			Z Note 6)	Name plate and pressure gauge in imperial units: psi	○ Note 7)	○ Note 7)	○ Note 7)	○ Note 7)

Note 1) Option B, G, H, M are not assembled and supplied loose at the time of shipment.
Note 2) Assembly of a bracket and set nuts.
Note 3) Only for AR20-A to 40-A.
Note 4) When the pressure gauge is attached, a 1.0 MPa pressure gauge will be fitted for standard (0.7 MPa) type. 0.4 MPa pressure gauge for 0.2 MPa type.
Note 5) Pressure can be set higher than the specification pressure in some cases, but use pressure within the specification range.
Note 6) For thread type: NPT.
This product is for overseas use only according to the new Measurement Law. (The SI unit type is provided for use in Japan.)
Round pressure gauge (with color zone): Cannot be used with M. Available by request for special.
Note 7) ☐: For thread type: NPT only

Standard Specifications

Model	AR20-A	AR25-A	AR30-A	AR40-A	AR40-06-A
Port size	1/8, 1/4	1/4, 3/8	1/4, 3/8	1/4, 3/8, 1/2	3/4
Pressure gauge port size	1/8				
Fluid	Air				
Ambient and fluid temperature	– 5 to 60°C (with no freezing)				
Proof pressure	1.5 MPa				
Maximum operating pressure	1.0 MPa				
Set pressure range	0.05 to 0.7 MPa				
Construction	Relieving type				
Weight (kg)	0.17	0.19	0.34	0.58	0.60

Options/Part No.

Optional specifications			Model				
			AR20-A	**AR25-A**	**AR30-A**	**AR40-A**	**AR40-06-A**
Bracket assembly Note 1)			AR22P-270AS	AR27P-270AS	AR32P-270AS	AR42P-270AS	AR42P-270AS
Set nut			AR22P-260S	AR22P-260S	AR32P-260S	AR42P-260S	AR42P-260S
Pressure gauge	**Round type** Note 2)	**Standard**	G36-10-□01			G46-10-□01	
		0.02 to 0.2 MPa setting	G36-4-□01			G46-4-□01	
	Round type (with color zone) Note 2)	**Standard**	G36-10-□01-L			G46-10-□01-L	
		0.02 to 0.2 MPa setting	G36-4-□01-L			G46-4-□01-L	

Note 1) Assembly of a bracket and set nuts
Note 2) □ in part numbers for a round pressure gauge indicates a type of connection thread. No indication is necessary for R; however, indicate N for NPT.
Please contact SMC regarding the connection thread NPT and pressure gauge supply for psi unit specifications.

⚠ Specific Product Precautions

Be sure to read before handling. Refer to back cover for Safety Instructions, "Handling Precautions for SMC Products" (M-E03-3) and the Operation Manual for F.R.L. Precautions.
Please download it via our website, http://www.smcworld.com

Selection

⚠ Warning

1. Although exhaust of the residual pressure to the inlet side is possible when eliminating the inlet pressure, exhaust is not possible when the set pressure is 0.15 MPa or less. Use the regulator with backflow function.

Maintenance

⚠ Warning

1. When using the regulator between a solenoid valve and an actuator, check the pressure gauge periodically. Sudden pressure fluctuations may shorten the durability of the pressure gauge. A digital pressure gauge is recommended for such situation or as deemed necessary.

Mounting and Adjustment

⚠ Warning

1. Set the regulator while verifying the displayed values of the inlet and outlet pressure gauges. Turning the regulator knob excessively can cause damage to the internal parts.
2. Do not use tools on the pressure regulator knob as this may cause damage. It must be operated manually.

⚠ Caution

1. Be sure to unlock the knob before adjusting the pressure and lock it after setting the pressure. Failure to follow this procedure can cause damage to the knob and the outlet pressure may fluctuate.
   - Pull the pressure regulator knob to unlock. (You can visually verify this with the "orange mark" that appears in the gap.)
   - Push the pressure regulator knob to lock. When the knob is not easily locked, turn it left and right a little and then push it (when the knob is locked, the "orange mark", i.e., the gap will disappear).
2. Pulsation will be generated when the difference between the inlet and the outlet pressure is large. In this case, reduce the pressure difference between the inlet and the outlet. Consult SMC if the pulsation problem is not resolved.

Flow Characteristics (Representative values)

Condition: Inlet pressure 0.7 MPa

AR20-A Rc 1/4

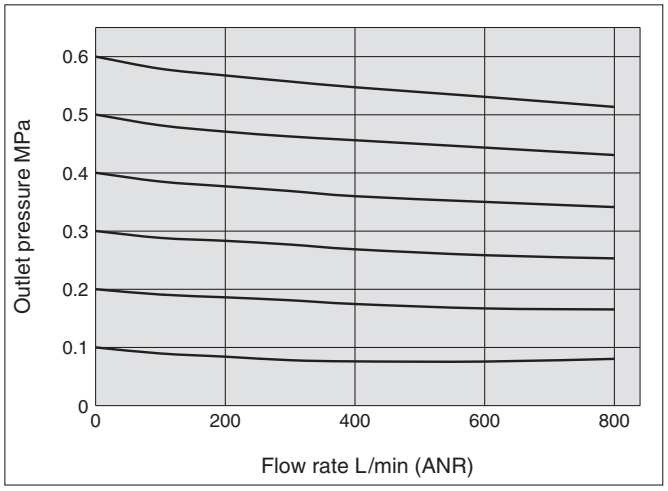

AR25-A Rc 3/8

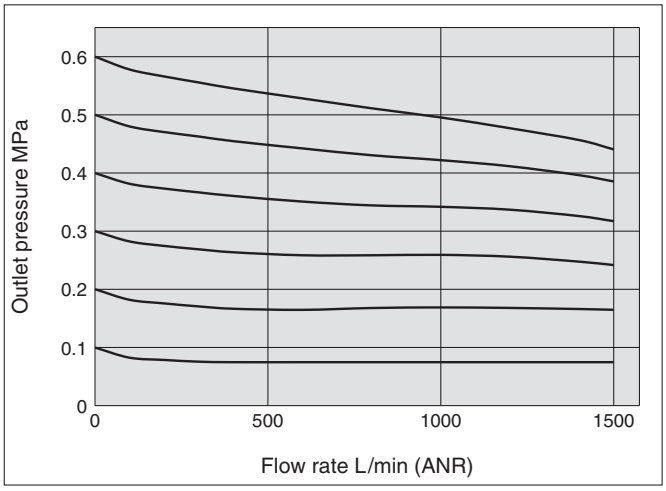

AR30-A Rc 3/8

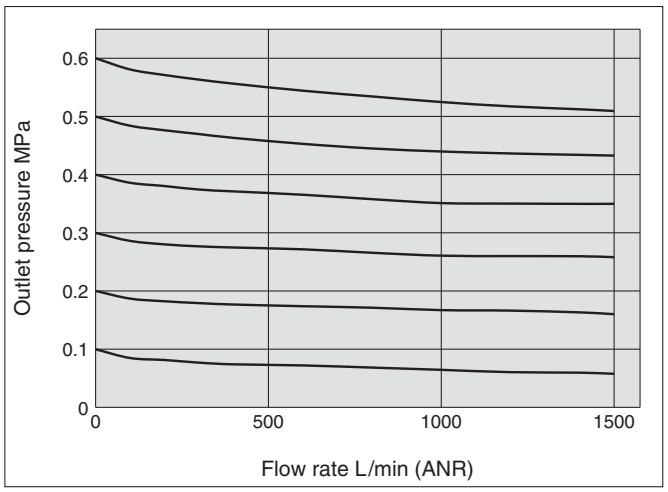

AR40-A Rc 1/2

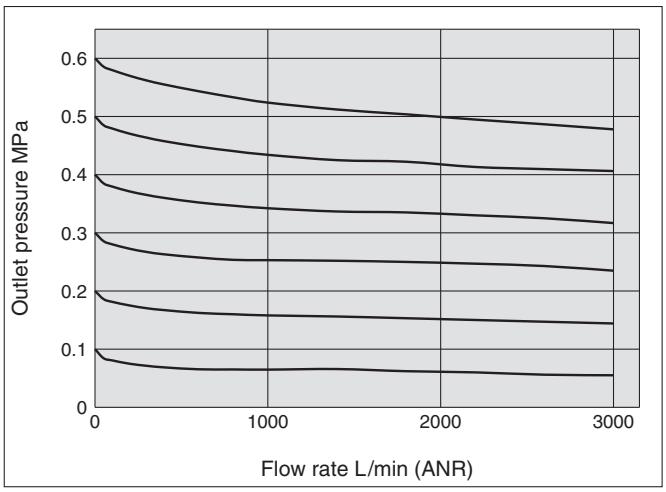

AR40-06-A Rc 3/4

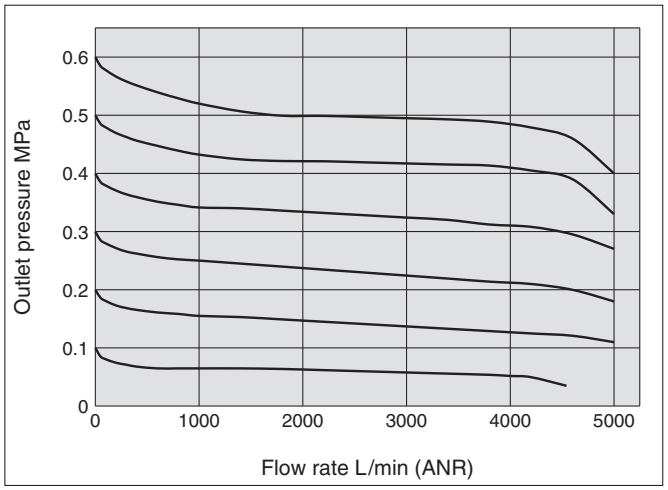

Pressure Characteristics (Representative values)

Conditions: Inlet pressure 0.7 MPa, Outlet pressure 0.2 MPa, Flow rate 20 L/min (ANR)

AR20-A

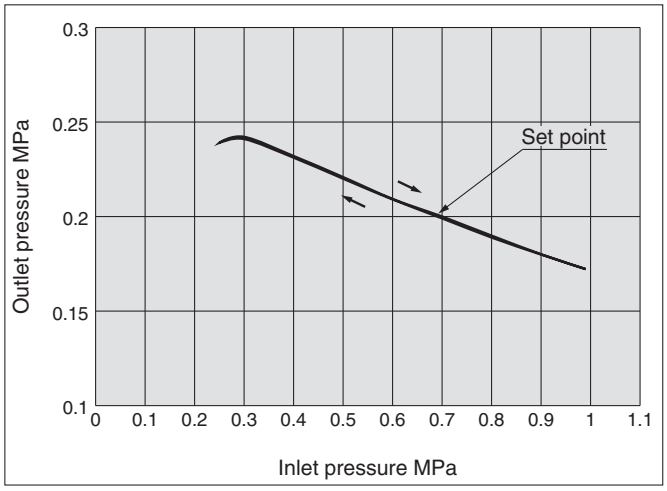

AR25-A

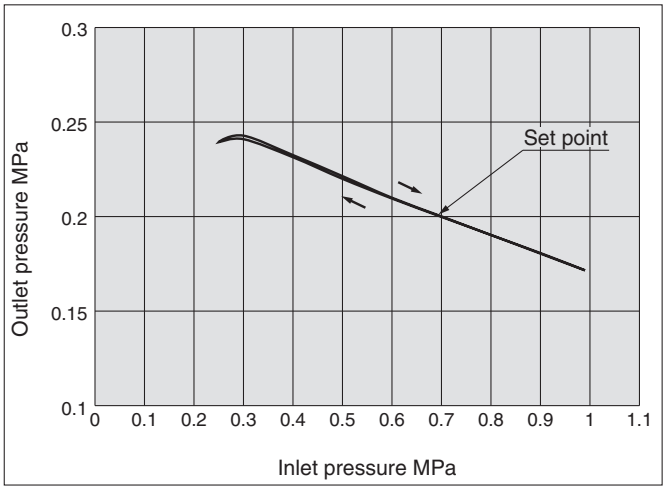

AR30-A

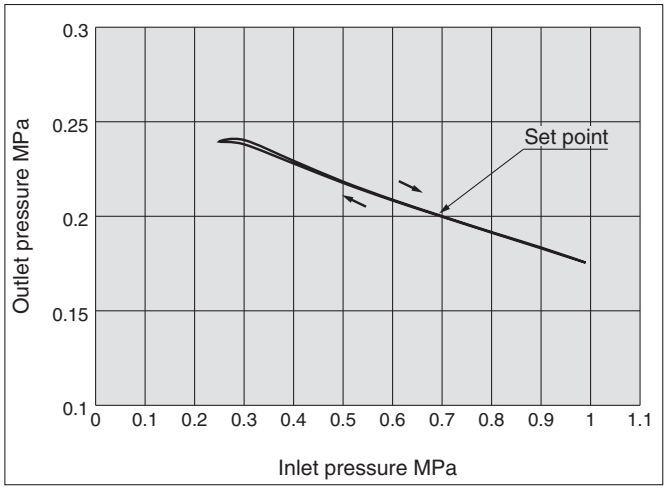

AR40-A/AR40-06-A

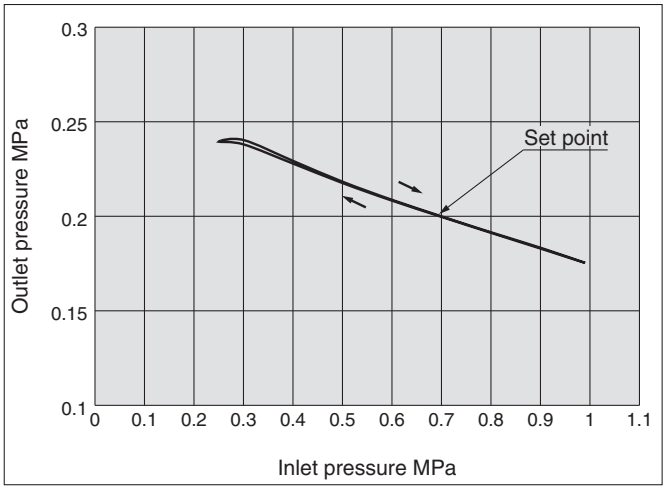

Construction

AR20-A to 40-06-A

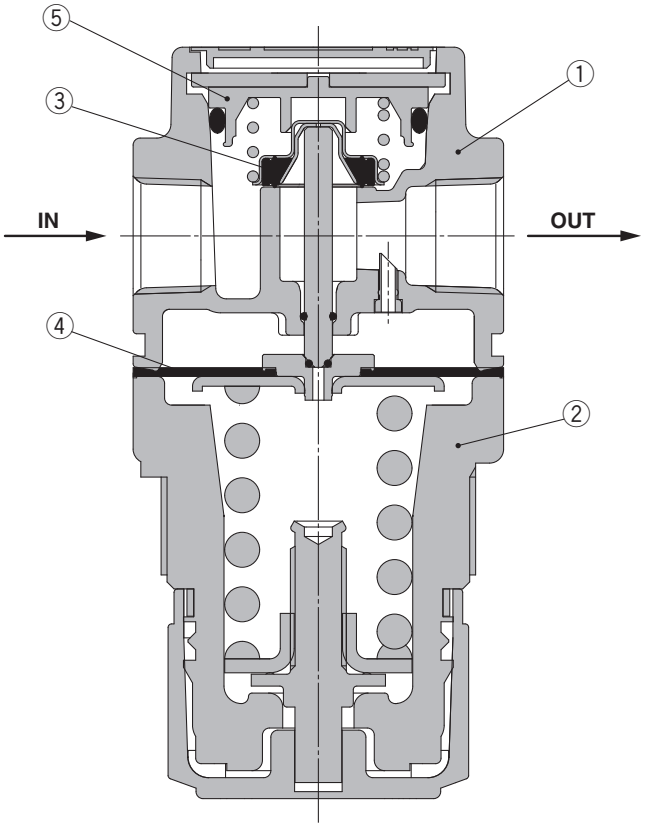

Component Parts

No.	Description	Material	Color
1	**Body**	Aluminum die-cast	White
2	**Bonnet**	Polyacetal	White

Replacement Parts

No.	Description	Material	Part no.				
			AR20-A	**AR25-A**	**AR30-A**	**AR40-A**	**AR40-06-A**
3	**Valve assembly**	Stainless steel, HNBR	AR22P-060AS		AR32P-060AS	AR42P-060AS	
4	**Diaphragm assembly**	Weatherable NBR	AR22P-150AS		AR32P-150AS	AR42P-150AS	
5	**Valve guide assembly**	Polyacetal	AR22P-050AS		AR32P-050AS	AR42P-050AS	

Dimensions

AR20-A to AR40-06-A

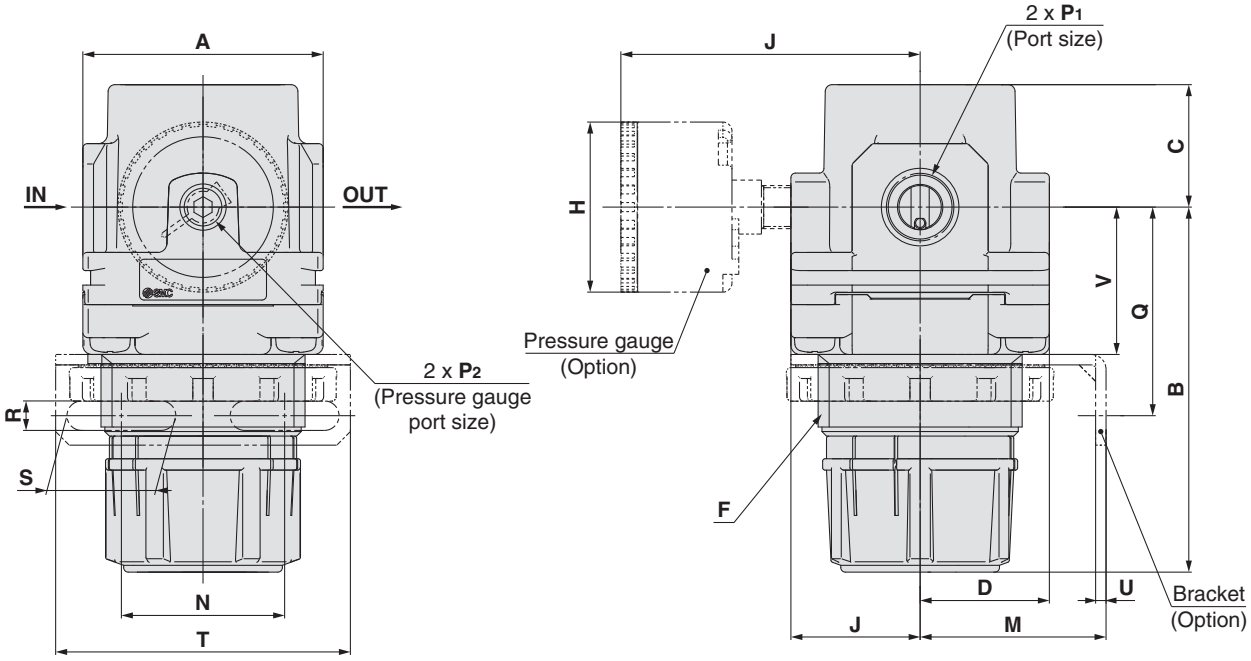

Panel fitting dimension

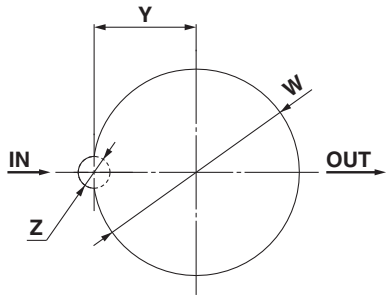

Plate thickness
AR20-A to AR25-A : MAX.4
AR30-A to AR40-06-A: MAX.8

Model	Standard specifications								Optional specifications														
									Round type pressure gauge		Round type pressure gauge (with color zone)		Bracket mount							Panel mount			
	P_1	P_2	A	B Note)	C	D	F	J	H	J	H	J	M	N	Q	R	S	T	U	V	W	Y	Z
AR20-A	1/8, 1/4	1/8	40	67.4	23.5	22	M36 x 1.5	22	ø37.5	58.5	ø37.5	59.5	30	34	43.9	5.4	15.4	55	2.3	27.3	36.5	17.5	6
AR25-A	1/4, 3/8	1/8	53	70.4	23.5	22	M36 x 1.5	22	ø37.5	58.5	ø37.5	59.5	30	34	44.3	5.4	15.4	55	2.3	30.3	36.5	17.5	6
AR30-A	1/4, 3/8	1/8	53	83.5	27	28.5	M45 x 1.5	28.5	ø37.5	65	ø37.5	66	41	36	46	6.5	24	65	2.3	32.5	45.5	22.5	7
AR40-A	1/4, 3/8, 1/2	1/8	70	100	33.5	34.5	M52 x 1.5	34.5	ø42.5	72	ø42.5	72	50	38	54	8.5	26.5	70	2.3	38.4	52.5	26	7
AR40-06-A	3/4	1/8	75	101.5	33.5	34.5	M52 x 1.5	34.5	ø42.5	72	ø42.5	72	50	38	55.5	8.5	26.5	70	2.3	39.9	52.5	26	7

Note) The total length of B dimension is the length when the filter regulator knob is unlocked.

Modular Type Lubricators

Series AL

Lubricator Series AL	Model	Port size	Option
P.53 to 57	**AL20-A**	1/8, 1/4	Bracket
	AL30-A	1/4, 3/8	
	AL40-A	1/4, 3/8, 1/2	
	AL40-06-A	3/4	

Lubricator

AL20-A to AL40-A

JIS Symbol

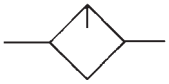

AL20-A **AL40-A**

How to Order

AL 30 – ❷ 03 B – ❺ – A

❶ ❷ ❸ ❹ ❺

- Option/Semi-standard: Select one each for **a** to **d**.
- Option/Semi-standard symbol: When more than one specification is required, indicate in alphanumeric order.

Example) AL30-03B-R-A

		Symbol	Description	❶ Body size 20	30	40
❷	Thread type	**Nil**	Rc	●	●	●
		N	NPT	●	●	●
		F	G	●	●	●
		+				
❸	Port size	**01**	1/8	●	—	—
		02	1/4	●	●	●
		03	3/8	—	●	●
		04	1/2	—	—	●
		06	3/4	—	—	●
		+				
❹	Option (Mounting)	**Nil**	Without mounting option	●	●	●
		B Note 1)	With bracket	●	●	●
		+				
❺ Semi-standard	**a** Bowl	**Nil**	Polycarbonate bowl	●	●	●
		C	With bowl guard	●	— Note 2)	— Note 2)
		+				
	b Lubricant exhaust port	**Nil**	Without drain cock	●	●	●
		3	With drain cock	●	●	●
		3W	Drain cock with barb fitting (for ø6 x ø4 nylon tube)	—	●	●
		+				
	c Flow direction	**Nil**	Flow direction: Left to right	●	●	●
		R	Flow direction: Right to left	●	●	●
		+				
	d Pressure unit	**Nil**	Name plate and caution plate for bowl in imperial units: MPa	●	●	●
		Z Note 3)	Name plate and caution plate for bowl in imperial units: psi, °F	○ Note 4)	○ Note 4)	○ Note 4)

Note 1) Option B is not assembled and supplied loose at the time of shipment.
Note 2) Standard material (polycarbonate)
Note 3) For thread type: NPT. This product is for overseas use only according to the new Measurement Law. (The SI unit type is provided for use in Japan.)
Note 4) ○: For thread type: NPT only

Standard Specifications

Model	AL20-A	AL30-A	AL40-A	AL40-06-A
Port size	1/8, 1/4	1/4, 3/8	1/4, 3/8, 1/2	3/4
Fluid	Air			
Proof pressure	1.5 MPa			
Maximum operating pressure	1.0 MPa			
Ambient and fluid temperature	– 5 to 60°C (with no freezing)			
Minimum dripping flow rate [L/min (ANR)] Note)	15	1/4: 30 3/8: 40	1/4: 30 3/8: 40 1/2: 50	50
Oil capacity (cm³)	25	55	135	
Recommended lubricant	Class 1 turbine oil (ISO VG32)			
Bowl material	Polycarbonate			
Bowl guard	Semi-standard (Steel)	Standard (Polycarbonate)		
Weight (kg)	0.10	0.20	0.38	0.43

Note) • The flow rate is 5 drops or greater/min under the following conditions: Inlet pressure of 0.5 MPa; Class 1 turbine oil (ISO VG32); Temperature at 20°C; Oil adjustment valve fully opened.
• Use air consumption flow rate for minimum dripping flow rate.

Option/Part No.

Optional specifications	Model			
	AL20-A	**AL30-A**	**AL40-A**	**AL40-06-A**
Bracket assembly Note)	AF22P-050AS	AF32P-050AS	AF42P-050AS	AF42P-070AS

Note) Assembly of a bracket and 2 mounting screws.

Semi-standard/Bowl Assembly Part No.

Semi-standard specifications				Model			
Bowl material	With drain cock	With barb fitting	With bowl guard	**AL20-A**	**AL30-A**	**AL40-A**	**AL40-06-A**
Polycarbonate	●	—	—	C2SL-3-A	C3SL-3-A	C4SL-3-A	
	—	—	●	C2SL-C-A	—	—	
	●	—	●	C2SL-3C-A	—	—	
	●	●	—	—	C3SL-3W-A	C4SL-3W-A	

Note) • The bowl assembly includes the bowl O-ring.
• Please consult with SMC separately for psi and °F unit display specifications.

Flow Characteristics (Representative values)

AL20-A Rc 1/4

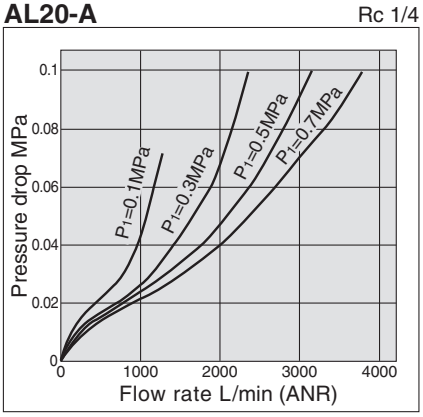

AL30-A Rc 3/8

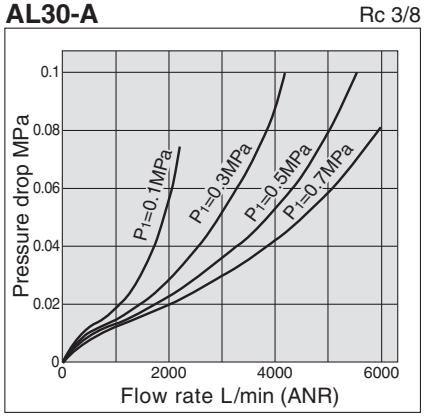

AL40-A Rc 1/2

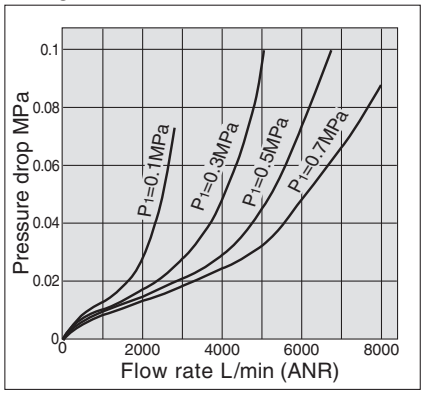

AL40-06-A Rc 3/4

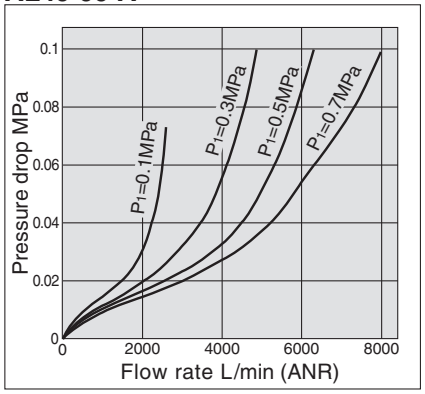

⚠ Specific Product Precautions

Be sure to read before handling. Refer to back cover for Safety Instructions, "Handling Precautions for SMC Products" (M-E03-3) and the Operation Manual for F.R.L. Precautions. Please download it via our website, http://www.smcworld.com

Selection

⚠ Warning

1. Do not introduce air from the outlet side as this can damage the damper.
2. **The standard bowl for the air filter, filter regulator, and lubricator, as well as the sight dome for the lubricator and bowl guard are made of polycarbonate. Do not use in an environment where they are exposed to or come in contact with organic solvents, chemicals, cutting oil, synthetic oil, alkali, and thread lock solutions.**

Effects of atmosphere of organic solvents and chemicals, and where these elements are likely to adhere to the equipment. Chemical data for substances causing degradation (Reference)

Type	Chemical name	Application examples	Material: Polycarbonate
Acid	Hydrochloric acid Sulfuric acid, Phosphoric acid Chromic acid	Acid washing liquid for metals	△
Alkaline	Sodium hydroxide (Caustic soda) Potash Calcium hydroxide (Slack lime) Ammonia water Carbonate of soda	Degreasing of metals Industrial salts Water-soluble cutting oil	×
Inorganic salts	Sodium sulfide Sulfate of potash Sulfate of soda	—	×
Chlorine solvents	Carbon tetrachloride Chloroform Ethylene chloride Methylene chloride	Cleansing liquid for metals Printing ink Dilution	×
Aromatic series	Benzene Toluene Paint thinner	Coatings Dry cleaning	×
Ketone	Acetone Methyl ethyl ketone Cyclohexane	Photographic film Dry cleaning Textile industries	×
Alcohol	Ethyl alcohol IPA Methyl alcohol	Antifreeze Adhesives	△
Oil	Gasoline Kerosene	—	×
Ester	Phthalic acid dimethyl Phthalic acid dimethyl Acetic acid	Synthetic oil Anti-rust additives	×
Ether	Methyl ether Ethyl ether	Brake oil additives	×
Amino	Methyl amino	Cutting oil Brake oil additives Rubber accelerator	×
Other	Thread-lock fluid Seawater Leak tester	—	×

△ : Some effects may occur × : Effects will occur

⚠ Caution

1. Use a check valve (Series AKM) to prevent back flow of the lubricant when redirecting the air flow before the lubricator.

Maintenance

⚠ Warning

1. For the AL20-A type, replenish the lubricant after releasing the inlet pressure. Lubrication cannot take place under a pressurized condition.
2. Adjustment of the oil regulating valve for models from the AL20-A to AL40-A should be carried out manually. Turning it counterclockwise increases the dripping amount, and turning it clockwise reduces the dripping amount. The use of tools, etc. can result in damage to the unit. From the fully closed position, three rotations will bring it to the fully open position. Please do not rotate it any further than this. Note that the numbered scale markings are guidelines for adjusting the position, and not indicators of the dripping amount.

⚠ Caution

1. Check the dripping amount once a day. Drip failure can cause damage to the components that need lubrication.

Mounting and Adjustment

⚠ Caution

1. When the bowl is installed, install them so that the lock button lines up to the groove of the front (or the back) of the body to avoid drop or damage of the bowl.

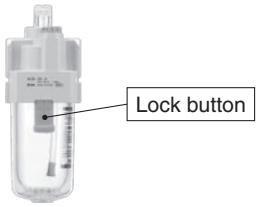

Construction

AL20-A

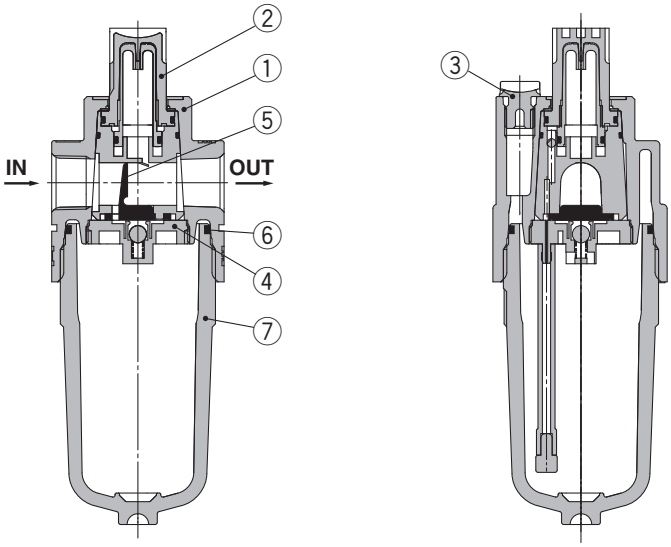

AL30-A, AL40-A

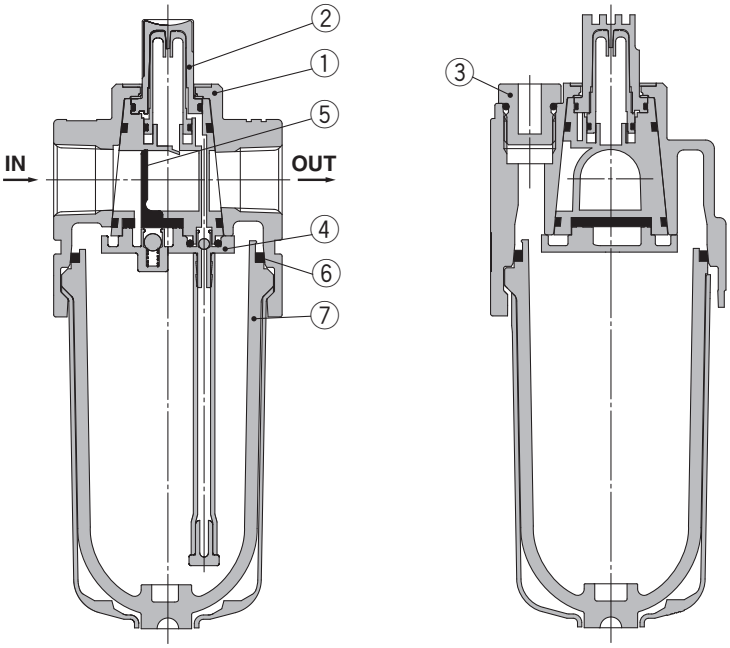

Component Parts

No.	Description	Material	Model	Color
1	**Body**	Aluminum die-cast	AL20-A to AL40-A	White

Replacement Parts

No.	Description	Material	Part no.			
			AL20-A	**AL30-A**	**AL40-A**	**AL40-06-A**
2	**Sight dome assembly**	Polycarbonate	AL20P-080AS			
3	**Lubrication plug assembly**	—	AL22P-060AS	AL32P-060AS	AL42P-060AS	
4	**Damper retainer assembly**	—	AL20P-030AS	AL30P-030AS	AL40P-030AS	
5	**Damper (assembly)**	Synthetic resin	AL20P-040S	AL30P-040S	AL40P-040S	
6	**Bowl seal**	NBR	C2SFP-260S	C32FP-260S	C42FP-260S	
7	**Bowl assembly** Note)	Polycarbonate	C2SL-A	C3SL-A	C4SL-A	

Note) Bowl seal is included. Please contact SMC regarding the bowl assembly supply for psi and °F unit specifications.

Dimensions

AL20-A

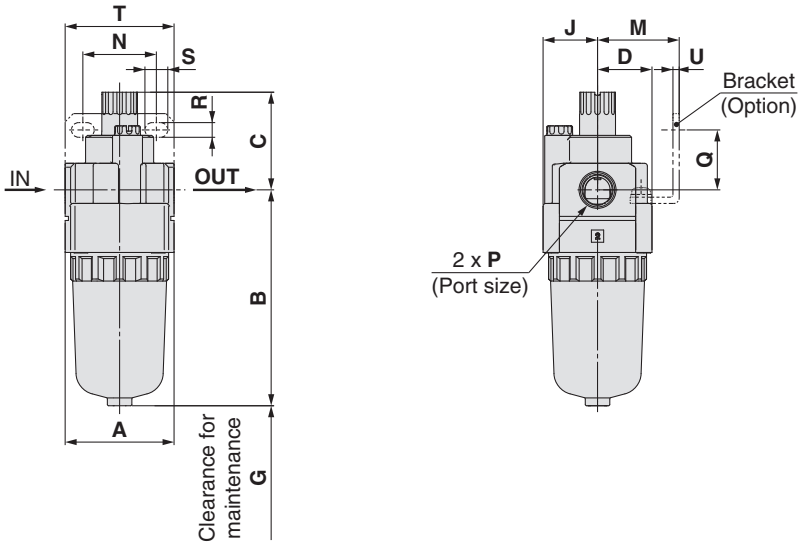

AL30-A, AL40-A

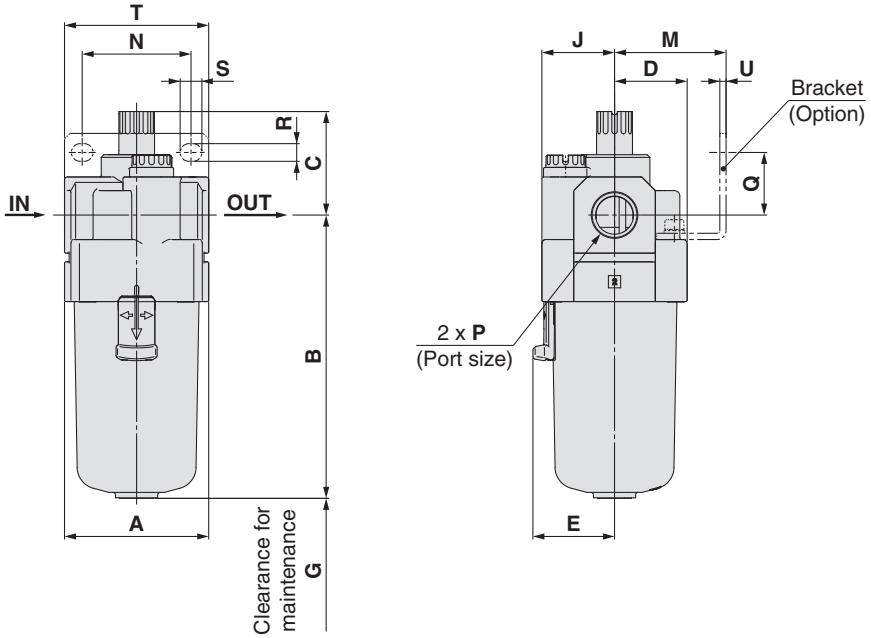

Applicable model	AL20-A		AL30-A to AL40-A	
Optional/Semi-standard specifications	With drain cock	Metal bowl with drain cock	With drain cock	Drain cock with barb fitting
Dimensions	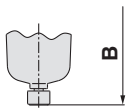	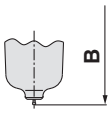	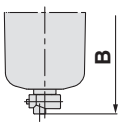	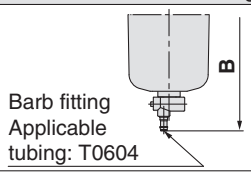 Barb fitting Applicable tubing: T0604

Model	Standard specifications								Optional specifications Bracket mount						
	P	A	B	C	D	E	G	J	M	N	Q	R	S	T	U
AL20-A	1/8, 1/4	40	79.3	35.9	20	—	60	20	30	27	22	5.4	8.4	40	2.3
AL30-A	1/4, 3/8	53	104.1	38.1	26.7	30	80	26.7	41	40	23	6.5	8	53	2.3
AL40-A	1/4, 3/8, 1/2	70	136.1	39.8	35.5	38.4	110	35.5	50	54	26	8.5	10.5	70	2.3
AL40-06-A	3/4	75	138.1	37.8	35.5	38.4	110	35.5	50	54	25	8.5	10.5	70	2.3

Model	Semi-standard specifications	
	With drain cock	With barb fitting
	B	B
AL20-A	87.7	—
AL30-A	115.1	123.6
AL40-A	147.1	155.6
AL40-06-A	149.1	157.6

Modular Type Filter Regulators

Series AW

Filter Regulator Series AW	Model	Port size	Options
P.59 to 65	**AW20-A**	1/8, 1/4	Bracket Float type auto drain Round type pressure gauge With set nut (for panel mount)* * Mounting pitch is different from existing AW Series.
	AW30-A	1/4, 3/8	
	AW40-A	1/4, 3/8, 1/2	
	AW40-06-A	3/4	

Filter Regulator

AW20-A to AW40-A

JIS Symbol
Filter Regulator

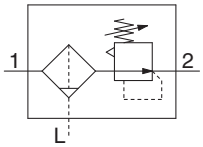

- **Integrated filter and regulator units save space and require less piping.**

How to Order

AW 30 – ☐ 03 BG – ☐ –A

❶ ❷ ❸ ❹ ❺

- Option/Semi-standard: Select one each for **a** to **i**.
- Option/Semi-standard symbol: When more than one specification is required, indicate in alphanumeric order.

Example) AW30-03BG-1N-A

			Symbol	Description	❶ Body size 20	30	40
❷	With backflow function		**Nil**	Rc	●	●	●
			N Note 1)	NPT	●	●	●
			F Note 2)	G	●	●	●
			+				
❸	Thread type		**01**	1/8	●	—	—
			02	1/4	●	●	●
			03	3/8	—	●	●
			04	1/2	—	—	●
			06	3/4	—	—	●
			+				
❹	Option Note 3)	**a** Mounting	**Nil**	Without mounting option	●	●	●
			B Note 4)	With bracket	●	●	●
			H	With set nut (for panel mount)	●	●	●
			+				
		b Float type auto drain	**Nil**	Without auto drain	●	●	●
			C Note 5)	N.C. (Normal close) Drain port is closed when pressure is not applied.	●	●	●
			D Note 6)	N.O. (Normal open) Drain port is open when pressure is not applied.	—	●	●
			+				
		c Pressure gauge Note 7)	**Nil**	Without pressure gauge	●	●	●
			G	Round type pressure gauge (with limit indicator)	●	●	●
			M	Round type pressure gauge (with color zone)	●	●	●
			+				
❺	Semi-standard	**d** Set pressure Note 8)	**Nil**	0.05 to 0.7 MPa setting	●	●	●
			1	0.02 to 0.2 MPa setting	●	●	●
			+				
		e Bowl Note 9)	**Nil**	Polycarbonate bowl	●	●	●
			C	With bowl guard	●	— Note 10)	— Note 10)

AW20-A **AW40-A**

		Symbol	Description	❶ Body size 20	30	40
❺ Semi-standard	f Drain port	**Nil**	With drain cock	●	●	●
		J Note 11)	Drain guide 1/8	●	—	—
			Drain guide 1/4	—	●	●
		W	Drain cock with barb fitting (for ø6 x ø4 nylon tube)	—	●	●
		+				
	g Exhaust mechanism	**Nil**	Relieving type	●	●	●
		N	Non-relieving type	●	●	●
		+				
	h Flow direction	**Nil**	Flow direction: Left to right	●	●	●
		R	Flow direction: Right to left	●	●	●
		+				
	i Pressure unit	**Nil**	Name plate, caution plate for bowl, and pressure gauge in imperial units: MPa	●	●	●
		Z Note 12)	Name plate, caution plate for bowl, and pressure gauge in imperial units: psi, °F	○ Note 13)	○ Note 13)	○ Note 13)

Note 1) Drain guide is NPT 1/8 (applicable to the AW20-A) and NPT 1/4 (applicable to the AW30-A to AW40-A). The auto drain port comes with ø3/8" One-touch fitting (applicable to the AW30-A to AW40-A).
Note 2) Drain guide is G 1/8 (applicable to the AW20-A) and G 1/4 (applicable to the AW30-A to AW40-A).
Note 3) Option B, G, H, M are not assembled and supplied loose at the time of shipment.
Note 4) Assembly of a bracket and set nuts.
Note 5) When pressure is not applied, condensate which does not start the auto drain mechanism will be left in the bowl. Releasing the residual condensate before ending operations for the day is recommended.
Note 6) If the compressor is small (0.75 kW, discharge flow is less than 100 L/min[ANR]), air leakage from the drain cock may occur during start of operations. N.C. type is recommended.
Note 7) When the pressure gauge is attached, a 1.0 MPa pressure gauge will be fitted for standard (0.7 MPa) type. 0.4 MPa pressure gauge for 0.2 MPa type.
Note 8) Pressure can be set higher than the specification pressure in some cases, but use pressure within the specification range.
Note 9) Refer to Chemical data on page 62 for chemical resistance of the bowl.
Note 10) Standard material (polycarbonate)
Note 11) Without a valve function
Note 12) For thread type: NPT. This product is for overseas use only according to the new Measurement Law. (The SI unit type is provided for use in Japan.)
Note 13) ○: For thread type: NPT only

Standard Specifications

Model	AW20-A	AW30-A	AW40-A	AW40-06-A
Port size	1/8, 1/4	1/4, 3/8	1/4, 3/8, 1/2	3/4
Pressure gauge port size	1/8			
Fluid	Air			
Ambient and fluid temperature	–5 to 60°C (with no freezing)			
Proof pressure	1.5 MPa			
Maximum operating pressure	1.0 MPa			
Set pressure range	0.05 to 0.7 MPa			
Nominal filtration rating	5 μm			
Drain capacity (cm³)	8	25	45	
Bowl material	Polycarbonate			
Bowl guard	Semi-standard (Steel)	Standard (Polycarbonate)		
Construction	Relieving type			
Weight (kg)	0.21	0.41	0.75	0.81

Options/Part No.

Optional specifications			Model			
			AW20-A	**AW30-A**	**AW40-A**	**AW40-06-A**
Bracket assembly Note 1)			AR22P-270AS	AR32P-270AS	AR42P-270AS	
Set nut			AR22P-260S	AR32P-260S	AR42P-260S	
Pressure gauge	**Round type** Note 2)	**Standard**	G36-10-□01		G46-10-□01	
		0.02 to 0.2 MPa setting	G36-4-□01		G46-4-□01	
	Round type Note 2) **(with color zone)**	**Standard**	G36-10-□01-L		G46-10-□01-L	
		0.02 to 0.2 MPa setting	G36-4-□01-L		G46-4-□01-L	
Float type auto drain Note 3) Note 4)		**N.C.**	AD27-A	AD37-A	AD47-A	
		N.O.	—	AD38-A	AD48-A	

Semi-standard/Bowl Assembly Part No.

Semi-standard specifications						Model			
Bowl material	Float type auto drain Note 3) Note 4)		With drain guide Note 4)	With barb fitting	With bowl guard	**AW20-A**	**AW30-A**	**AW40-A**	**AW40-06-A**
	N.C.	N.O.							
Polycarbonate	—	—	—	—	●	C2SF-C-A	—	—	
	●	—	—	—	●	AD27-C-A	—	—	
	—	—	●	—	—	C2SF-J-A	C3SF-J-A	C4SF-J-A	
	—	—	—	●	—	—	C3SF-W-A	C4SF-W-A	
	—	—	●	—	●	C2SF-CJ-A	—	—	

Note 1) Assembly of a bracket and set nuts
Note 2) □ in part numbers for a round pressure gauge indicates a type of connection thread. No indication is necessary for R; however, indicate N for NPT. Please contact SMC regarding the connection thread NPT and pressure gauge supply for psi unit specifications.
Note 3) Minimum operating pressure: N.O. type–0.1 MPa; N.C. type–0.1 MPa (AD27-A) and 0.15 MPa (AD37-A/47-A).
Please consult with SMC separately for psi and °F unit display specifications.
Note 4) Please consult SMC for details on drain piping to fit NPT or G port sizes.
The bowl assembly includes the bowl O-ring.

⚠ Specific Product Precautions

Be sure to read before handling. Refer to back cover for Safety Instructions, "Handling Precautions for SMC Products" (M-E03-3) and the Operation Manual for F.R.L. Precautions.
Please download it via our website, http://www.smcworld.com

Design / Selection

⚠ Warning

1. Although exhaust of the residual pressure to the inlet side is possible when eliminating the inlet pressure, exhaust is not possible when the set pressure is 0.15 MPa or less. Use the regulator with backflow function.
2. **The standard bowl for the air filter, filter regulator, and lubricator, as well as the sight dome for the lubricator and bowl guard are made of polycarbonate. Do not use in an environment where they are exposed to or come in contact with organic solvents, chemicals, cutting oil, synthetic oil, alkali, and thread lock solutions.**

Effects of atmosphere of organic solvents and chemicals, and where these elements are likely to adhere to the equipment.
Chemical data for substances causing degradation (Reference)

Type	Chemical name	Application examples	Material
			Polycarbonate
Acid	Hydrochloric acid Sulfuric acid, Phosphoric acid Chromic acid	Acid washing liquid for metals	△
Alkaline	Sodium hydroxide (Caustic soda) Potash Calcium hydroxide (Slack lime) Ammonia water Carbonate of soda	Degreasing of metals Industrial salts Water-soluble cutting oil	×
Inorganic salts	Sodium sulfide Sulfate of potash Sulfate of soda	—	×
Chlorine solvents	Carbon tetrachloride Chloroform Ethylene chloride Methylene chloride	Cleansing liquid for metals Printing ink Dilution	×
Aromatic series	Benzene Toluene Paint thinner	Coatings Dry cleaning	×
Ketone	Acetone Methyl ethyl ketone Cyclohexane	Photographic film Dry cleaning Textile industries	×
Alcohol	Ethyl alcohol IPA Methyl alcohol	Antifreeze Adhesives	△
Oil	Gasoline Kerosene	—	×
Ester	Phthalic acid dimethyl Phthalic acid dimethyl Acetic acid	Synthetic oil Anti-rust additives	×
Ether	Methyl ether Ethyl ether	Brake oil additives	×
Amino	Methyl amino	Cutting oil Brake oil additives Rubber accelerato	×
Other	Thread-lock fluid Seawater Leak tester	—	×

△ : Some effects may occur × : Effects will occur

Maintenance

⚠ Warning

1. Replace the element every 2 years or when the pressure drop becomes 0.1 MPa, whichever comes first, to prevent damage to the element.

Mounting and Adjustment

⚠ Warning

1. Set the regulator while verifying the displayed values of the inlet and outlet pressure gauges. Turning the regulator knob excessively can cause damage to the internal parts.
2. Do not use tools on the pressure regulator knob as this may cause damage. It must be operated manually.

Mounting and Adjustment

⚠ Caution

1. Be sure to unlock the knob before adjusting the pressure and lock it after setting the pressure. Failure to follow this procedure can cause damage to the knob and the outlet pressure may fluctuate.
   - Pull the pressure regulator knob to unlock. (You can visually verify this with the "orange mark" that appears in the gap.)
   - Push the pressure regulator knob to lock. When the knob is not easily locked, turn it left and right a little and then push it (when the knob is locked, the "orange mark", i.e., the gap will disappear).

2. Pulsation will be generated when the difference between the inlet and the outlet pressure is large. In this case, reduce the pressure difference between the inlet and the outlet. Consult SMC if the pulsation problem is not resolved.
3. When the bowl is installed, install them so that the lock button lines up to the groove of the front (or the back) of the body to avoid drop or damage of the bowl.

Flow Characteristics (Representative values)

Condition: Inlet pressure 0.7 MPa

AW20-A

Rc 1/4

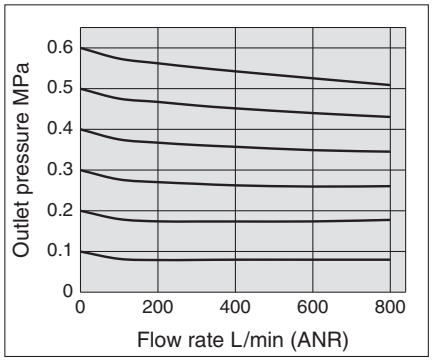

AW30-A

Rc 3/8

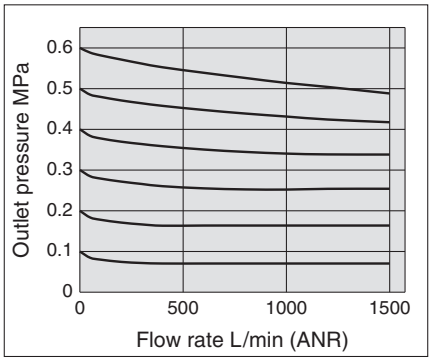

AW40-A

Rc 1/2

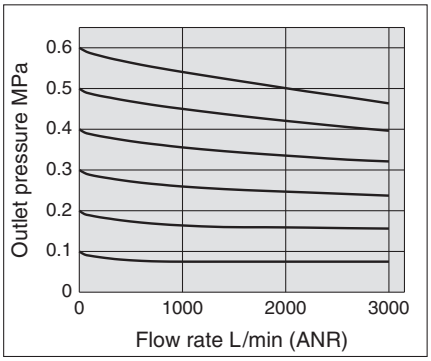

AW40-06-A

Rc 3/4

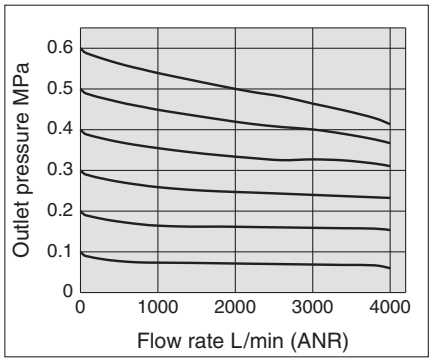

Pressure Characteristics (Representative values)

Conditions: Inlet pressure 0.7 MPa, Outlet pressure 0.2 MPa, Flow rate 20 L/min (ANR)

AW20-A

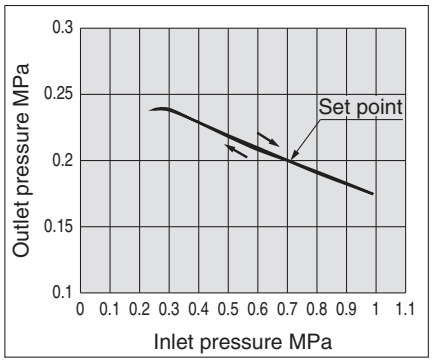

AW30-A

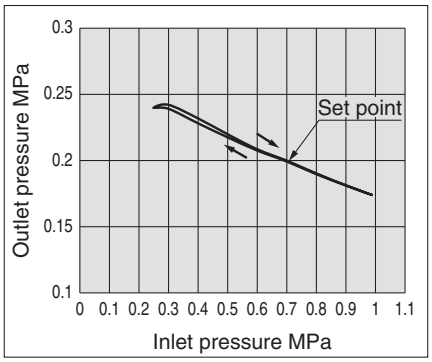

AW40-A/AW40-06-A

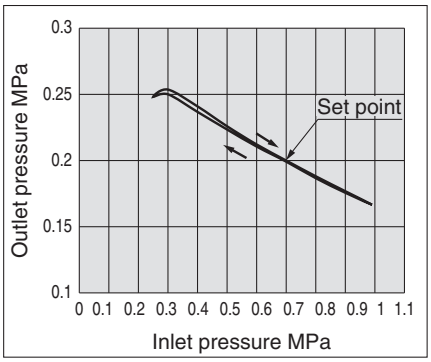

Construction

AW20-A

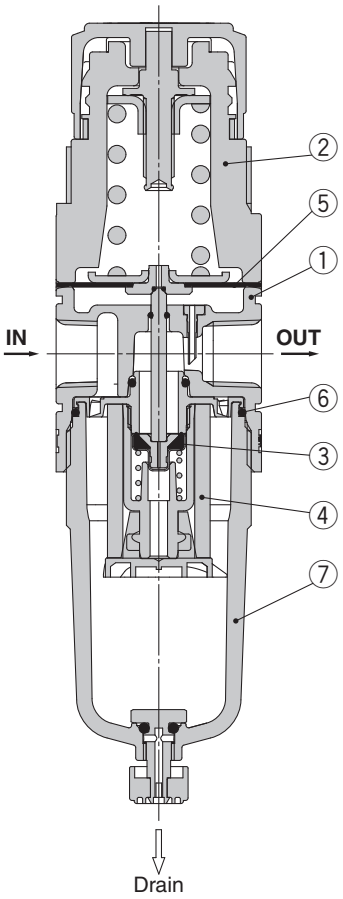

AW30-A to AW40-06-A

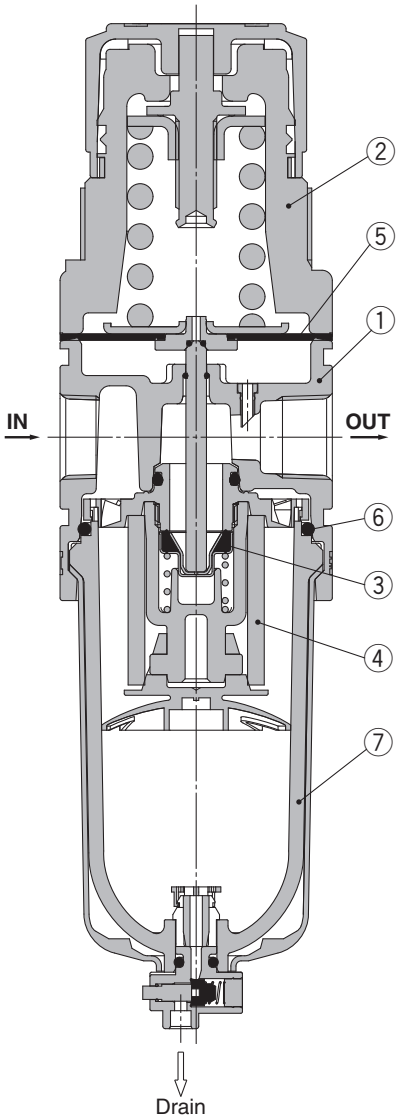

Component Parts

No.	Description	Material	Color
1	**Body**	Aluminum die-cast	White
2	**Bonnet**	Polyacetal	White

Replacement Parts

No.	Description	Material	Part no.			
			AW20-A	**AW30-A**	**AW40-A**	**AW40-06-A**
3	**Valve assembly**	Stainless steel, HNBR	AW22P-060AS	AW32P-060AS	AW42P-060AS	
4	**Filter element**	Non-woven fabric	AF20P-060S	AF30P-060S	AF40P-060S	
5	**Diaphragm assembly**	Weatherable NBR	AR22P-150AS	AR32P-150AS	AR42P-150AS	
6	**Bowl seal**	NBR	C2SFP-260S	C32FP-260S	C42FP-260S	
7	**Bowl assembly** Note)	Polycarbonate	C2SF-A	C3SF-A	C4SF-A	

Note) Bowl seal is included. Please contact SMC regarding the bowl assembly supply for psi and °F unit specifications.

Dimensions

AW20-A

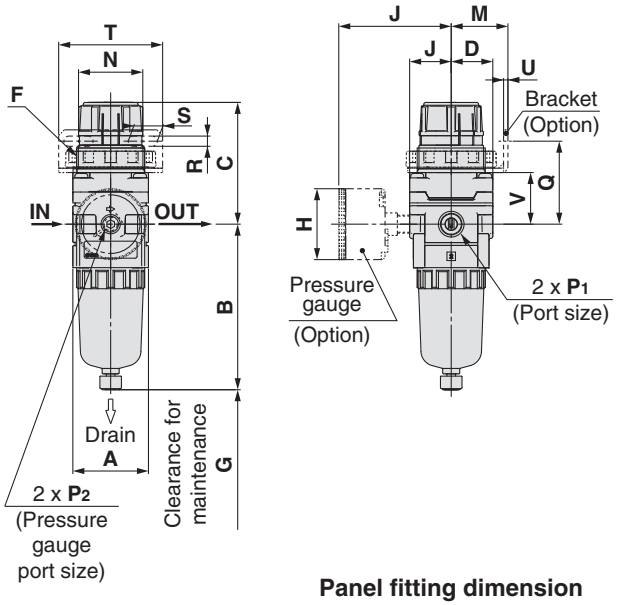

Panel fitting dimension

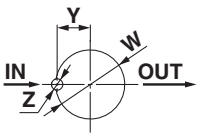

Plate thickness
AW20-A : Max.4

AW30-A to AW40-06-A

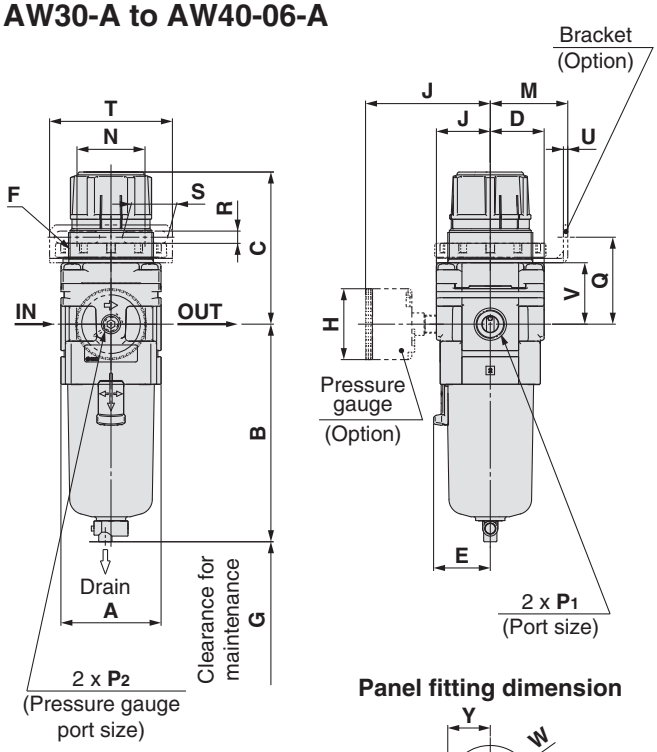

Panel fitting dimension

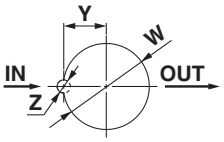

Plate thickness
AW30-A to AW40-06-A : MAX.8

Applicable model	AW20-A		AW30-A to AW40-A		
Optional/Semi-standard specifications	With auto drain (N.C.)	With drain guide	With auto drain (N.O./N.C.)	With drain guide	Drain cock with barb fitting
Dimensions	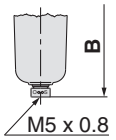	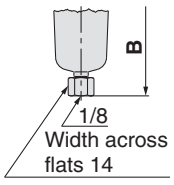	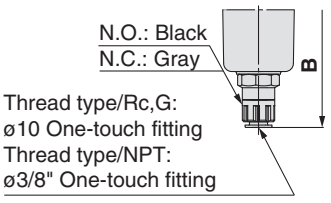	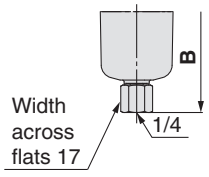	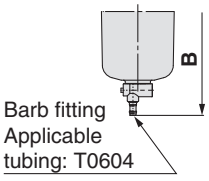

Model	Standard specifications										Optional specifications			
											Round type pressure gauge		Round type pressure gauge (with color zone)	
	P1	P2	A	B	C Note)	D	E	F	G	J	H	J	H	J
AW20-A	1/8, 1/4	1/8	40	87.6	67.4	22	—	M36 x 1.5	25	22	ø37.5	58.5	ø37.5	59.5
AW30-A	1/4, 3/8	1/8	53	115.1	83.5	28.5	30	M45 x 1.5	35	28.5	ø37.5	65	ø37.5	66
AW40-A	1/4, 3/8, 1/2	1/8	70	147.1	100	34.5	38.4	M52 x 1.5	40	34.5	ø42.5	72	ø42.5	72
AW40-06-A	3/4	1/8	75	149.1	101.5	34.5	38.4	M52 x 1.5	40	34.5	ø42.5	72	ø42.5	72

Model	Optional specifications												Semi-standard specifications	
	Bracket mount							Panel mount				With auto drain	With barb fitting	With drain guide
	M	N	Q	R	S	T	U	V	W	Y	Z	B	B	B
AW20-A	30	34	43.9	5.4	15.4	55	2.3	27.3	36.5	17.5	6	104.9	—	91.4
AW30-A	41	36	46	6.5	24	65	2.3	32.5	45.5	22.5	7	156.8	123.6	121.9
AW40-A	50	38	54	8.5	26.5	70	2.3	38.4	52.5	26	7	186.9	155.6	153.9
AW40-06-A	50	38	55.5	8.5	26.5	70	2.3	39.9	52.5	26	7	188.9	157.6	155.9

Note) The total length of C dimension is the length when the filter regulator knob is unlocked.

⚠ Safety Instructions

These safety instructions are intended to prevent hazardous situations and/or equipment damage. These instructions indicate the level of potential hazard with the labels of **"Caution," "Warning"** or **"Danger."** They are all important notes for safety and must be followed in addition to International Standards (ISO/IEC)*1), and other safety regulations.

⚠ Caution: **Caution** indicates a hazard with a low level of risk which, if not avoided, could result in minor or moderate injury.

⚠ Warning: **Warning** indicates a hazard with a medium level of risk which, if not avoided, could result in death or serious injury.

⚠ Danger : **Danger** indicates a hazard with a high level of risk which, if not avoided, will result in death or serious injury.

*1) ISO 4414: Pneumatic fluid power – General rules relating to systems.
ISO 4413: Hydraulic fluid power – General rules relating to systems.
IEC 60204-1: Safety of machinery – Electrical equipment of machines. (Part 1: General requirements)
ISO 10218-1: Manipulating industrial robots – Safety.
etc.

⚠ Warning

1. **The compatibility of the product is the responsibility of the person who designs the equipment or decides its specifications.**
   Since the product specified here is used under various operating conditions, its compatibility with specific equipment must be decided by the person who designs the equipment or decides its specifications based on necessary analysis and test results. The expected performance and safety assurance of the equipment will be the responsibility of the person who has determined its compatibility with the product. This person should also continuously review all specifications of the product referring to its latest catalog information, with a view to giving due consideration to any possibility of equipment failure when configuring the equipment.
2. **Only personnel with appropriate training should operate machinery and equipment.**
   The product specified here may become unsafe if handled incorrectly. The assembly, operation and maintenance of machines or equipment including our products must be performed by an operator who is appropriately trained and experienced.
3. **Do not service or attempt to remove product and machinery/equipment until safety is confirmed.**
   1. The inspection and maintenance of machinery/equipment should only be performed after measures to prevent falling or runaway of the driven objects have been confirmed.
   2. When the product is to be removed, confirm that the safety measures as mentioned above are implemented and the power from any appropriate source is cut, and read and understand the specific product precautions of all relevant products carefully.
   3. Before machinery/equipment is restarted, take measures to prevent unexpected operation and malfunction.
4. **Contact SMC beforehand and take special consideration of safety measures if the product is to be used in any of the following conditions.**
   1. Conditions and environments outside of the given specifications, or use outdoors or in a place exposed to direct sunlight.
   2. Installation on equipment in conjunction with atomic energy, railways, air navigation, space, shipping, vehicles, military, medical treatment, combustion and recreation, or equipment in contact with food and beverages, emergency stop circuits, clutch and brake circuits in press applications, safety equipment or other applications unsuitable for the standard specifications described in the product catalog.
   3. An application which could have negative effects on people, property, or animals requiring special safety analysis.
   4. Use in an interlock circuit, which requires the provision of double interlock for possible failure by using a mechanical protective function, and periodical checks to confirm proper operation.

⚠ Caution

1. **The product is provided for use in manufacturing industries.**
   The product herein described is basically provided for peaceful use in manufacturing industries.
   If considering using the product in other industries, consult SMC beforehand and exchange specifications or a contract if necessary.
   If anything is unclear, contact your nearest sales branch.

Limited warranty and Disclaimer/ Compliance Requirements

The product used is subject to the following "Limited warranty and Disclaimer" and "Compliance Requirements".
Read and accept them before using the product.

Limited warranty and Disclaimer

1. The warranty period of the product is 1 year in service or 1.5 years after the product is delivered.*2)
   Also, the product may have specified durability, running distance or replacement parts. Please consult your nearest sales branch.
2. For any failure or damage reported within the warranty period which is clearly our responsibility, a replacement product or necessary parts will be provided.
   This limited warranty applies only to our product independently, and not to any other damage incurred due to the failure of the product.
3. Prior to using SMC products, please read and understand the warranty terms and disclaimers noted in the specified catalog for the particular products.

*2) **Vacuum pads are excluded from this 1 year warranty.**
A vacuum pad is a consumable part, so it is warranted for a year after it is delivered.
Also, even within the warranty period, the wear of a product due to the use of the vacuum pad or failure due to the deterioration of rubber material are not covered by the limited warranty.

Compliance Requirements

1. The use of SMC products with production equipment for the manufacture of weapons of mass destruction (WMD) or any other weapon is strictly prohibited.
2. The exports of SMC products or technology from one country to another are governed by the relevant security laws and regulations of the countries involved in the transaction. Prior to the shipment of a SMC product to another country, assure that all local rules governing that export are known and followed.

⚠ Safety Instructions	Be sure to read "Handling Precautions for SMC Products" (M-E03-3) before using.

SMC Corporation
Akihabara UDX 15F,
4-14-1, Sotokanda, Chiyoda-ku, Tokyo 101-0021, JAPAN
Phone: 03-5207-8249 Fax: 03-5298-5362
http://www.smcworld.com
© 2012 SMC Corporation All Rights Reserved

Specifications are subject to change without prior notice and any obligation on the part of the manufacturer.
D-G
1st printing QV printing QV 8150SZ Printed in Japan.

Modular Adapter

Series E210/310/410

Easy connection to existing products!

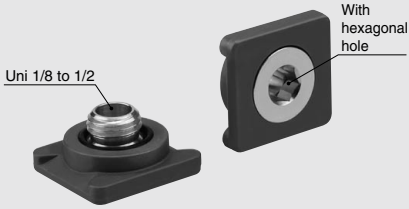

Flexible mounting

- Can be connected to existing products such as 2 port valves as well as F.R.L. Unit
- Can be freely rotated, thus allowing a wide selection of mounting directions
- Can be connected to existing products of different size
  Ex.: AF30+ARG20

Reduced space/piping maintenance cost

- Can be connected/disconnected without rotation
- Fittings, tube, etc. not required for connection

- Location of pressure gauge can be fixed depending on the installation location.

Ex. 1: Front face mounting

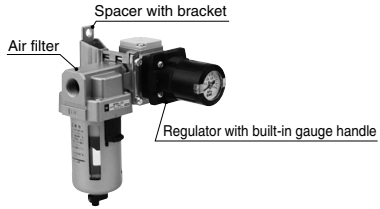

Ex. 2: Tilted position mounting

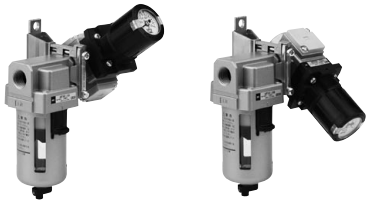

Application Examples

Ex. 1 Filter + 2 port valve

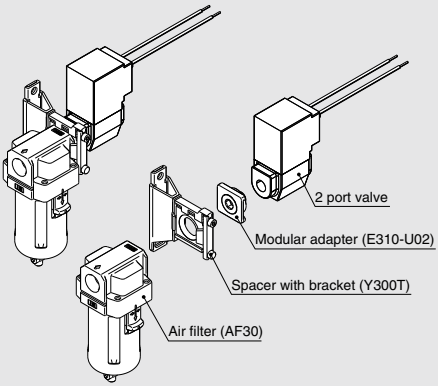

Ex. 2 2 port valve connection to air tank

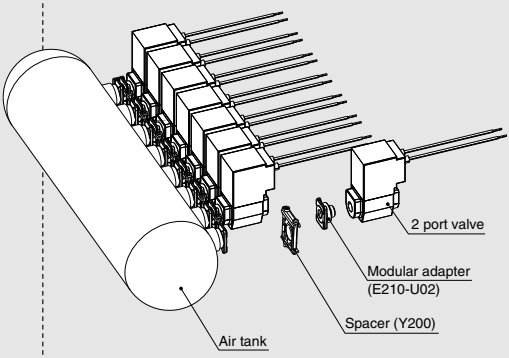

Ex. 3 Front face mounting of regulator with built-in gauge handle

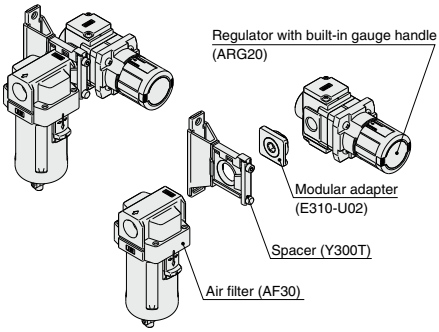

Ex. 4 Cross spacer to branch mounting

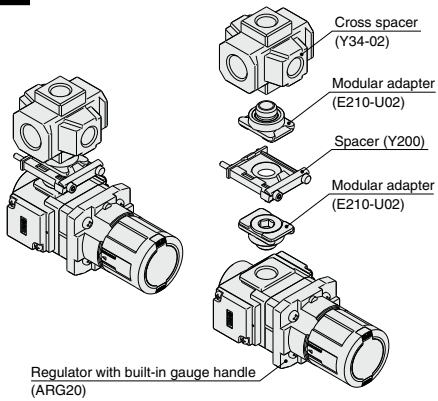

Ex. 5 T-spacer to branch mounting (1)

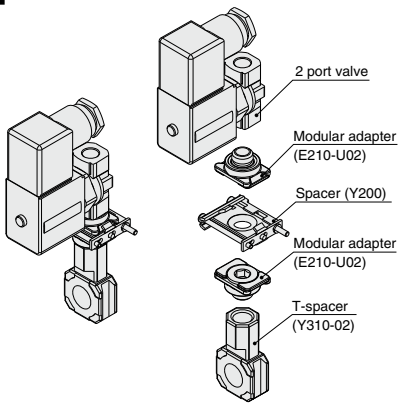

Ex. 6 T-spacer to downward face mounting (2)

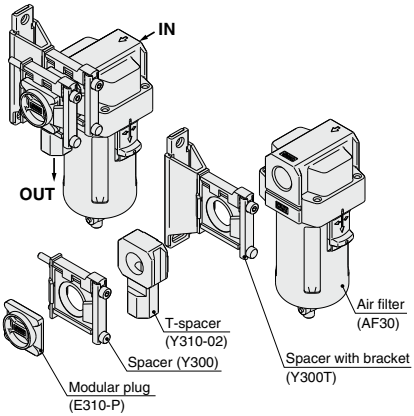

Ex. 7 Downward face mounting for L-shaped piping adapter

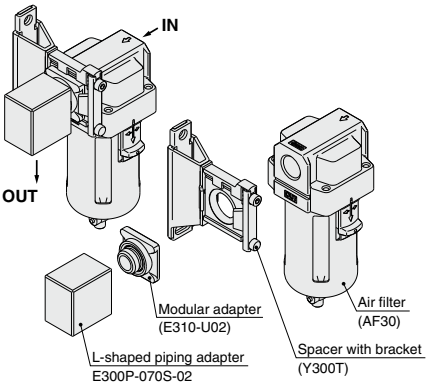

Modular Adapter
Series E210/310/410

How to Order

E310 – U 03

Size

210
310
410

Thread

U	Uni thread

Piping port size

Symbol	Port size Uni thread	Size 210	310	410
01	1/8	●	—	—
02	1/4	●	●	●
03	3/8	—	●	●
04	1/2	—	—	●

Specifications

Model	E210		E310		E410		
Port size	1/8	1/4	1/4	3/8	1/4	3/8	1/2
Piping I.D.	ø6	ø8	ø8	ø10	ø8	ø10	ø12
Fluid	Air						
Ambient and fluid temperature	–5 to 60°C (No freezing)						
Proof pressure	1.5 MPa						
Maximum operating pressure	1.0 MPa						
Weight (g)	26	25	38	38	60	62	68

Applicable Attachment Part Number

Applicable models	E210	E310	E410
Spacer	**Y200**	**Y300**	**Y400**
Spacer with bracket	**Y200T**	**Y300T**	**Y400T**

∗ Refer to page 590 for detailed dimensions.

Y200

Y400

Y200T

Y400T

Construction

E210-U01
E310-U02, U03
E410-U02, U03, U04

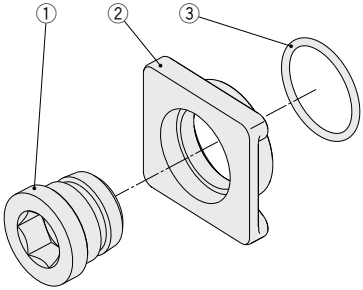

E210-U02

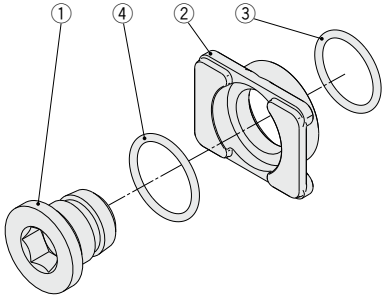

Component parts

No.	Description	Material
1	**Joint nipple**	Brass
2	**Adapter**	Zinc die-cast

Replacement parts

No.	Description	Material	Part no.				
			E210-U01	E210-U02	E310-U02 E410-U02	E310-U03 E410-U03	E410-U04
3	**O-ring**	NBR	**E210P-040S**	**E210P-030S**	**E210P-030S**	**E310P-030S**	**E410P-030S**
4	**O-ring**	NBR	**—**	**E210P-050S**	**—**	**—**	**—**

Dimensions

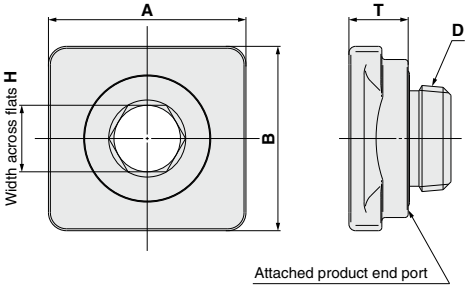

Unit: mm

Part no.	D Uni thread	A	B	T	Width across flats H
E210-U01	1/8	28	21	9	6
E210-U02	1/4				8
E310-U02	1/4	30	28		8
E310-U03	3/8				10
E410-U02	1/4	36	36		8
E410-U03	3/8				10
E410-U04	1/2				12

Mounting Dimensions

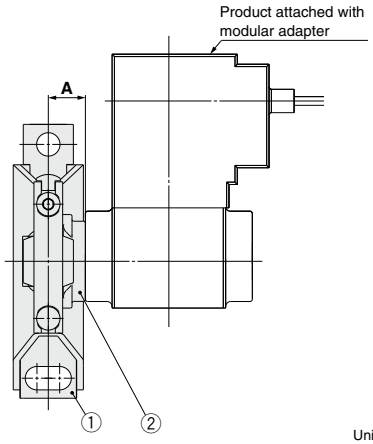

Unit: mm

① Spacer with bracket	② Modular adapter	A
Y200T	E210-U01 to U02	10.6
Y300T	E310-U02 to U03	11.1
Y400T	E410-U02 to U04	11.6

Note) Y200 to Y400 spacers share the same dimensions.

Option

Modular Plug

How to Order

E310 – P

Size: 210, 310, 410

Modular plug

Dimensions

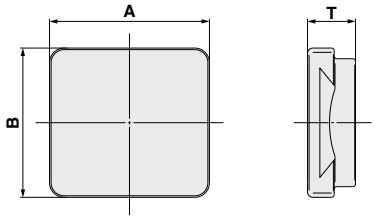

Unit: mm

Part no.	A	B	T	Applicable spacer	
				Spacer	Spacer with bracket
E210-P	28	21	9	Y200	Y200T
E310-P	30	28		Y300	Y300T
E410-P	36	36		Y400	Y400T

L-Shaped Piping Adapter

How to Order

E300P – 070S – 03

Size: 300, 400

Port size

Symbol	Port size Rc	Size	
		300	400
02	1/4	●	—
03	3/8	●	●
04	1/2	—	●

Dimensions

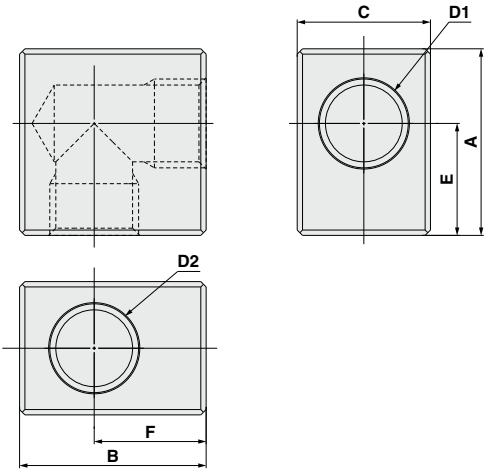

(mm)

Pert no.	D1	D2	A	B	C	E	F
E300P-070S-02	Rc1/4	Rc1/4	32	32	20	21	21
E300P-070S-03	Rc3/8	Rc3/8	35	35	25	21	21
E400P-070S-03	Rc3/8	Rc3/8	45	45	25	27.5	27.5
E400P-070S-04	Rc1/2	Rc1/2	45	45	30	27.5	27.5

Spacer

Y200

Y400

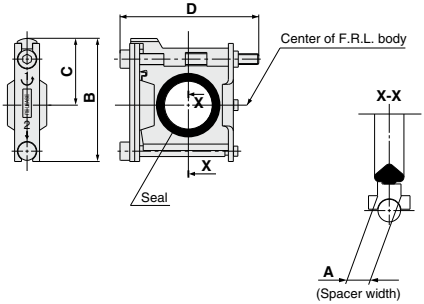

Model	A	B	C	D	Applicable model
Y200	3	35.5	18.5	48	**E210**
Y300	4	47	26	59	**E310**
Y400	5	57	31	65	**E410**

Replacement parts

Description	Material	Part no.		
		Y200	**Y300**	**Y400**
Seal	HNBR	Y200P-061S	Y300P-060S	Y400P-060S

Spacer with Bracket

Y200T

Y400T

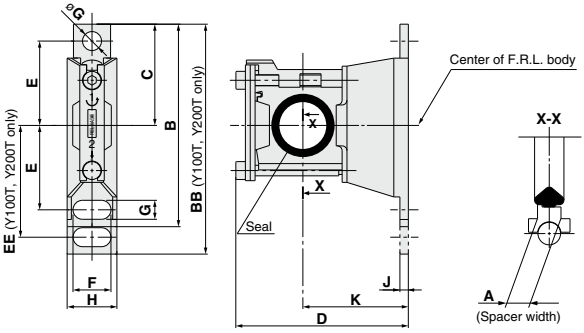

Model	A	B	BB	C	D	E	EE	F	G	øG	H	J	K	Applicable model
Y200T	3	—	67	29	53	24	33	12	5.5	5.5	19	3.2	30	**E210**
Y300T	4	82	—	41	68	35	—	14	7	7	21	4	41	**E310**
Y400T	5	96	—	48	81.5	40	—	18	9	9	26	4	50	**E410**

Replacement parts

Description	Material	Part no.		
		Y200T	**Y300T**	**Y400T**
Seal	HNBR	Y200P-061S	Y300P-060S	Y400P-060S

Series E210/310/410
Specific Product Precautions

Be sure to read before handling.
Refer to front matter 43 for Safety Instructions.

Mounting

⚠Caution

The seal surface of the product to be attached requires the modular adapter O-ring seal surface as shown in Table 1.

In addition, when tightening the modular adapter please refer to table 2 for the proper tightening torque.

Table 1: Required O-ring seal diameter for the mating product

Part no.	Port size	ø**d**
E210-U01	1/8	Over 14.5
E210-U02	1/4	Over 18
E310-U02	1/4	Over 18
E310-U03	3/8	Over 22
E410-U02	1/4	Over 18
E410-U03	3/8	Over 22
E410-U04	1/2	Over 27

Table 2: Hexagonal hole dim. & tightening torque

Part no.	Port size	Width across flats **H**	Recommended tightening torque (N·m)
E210-U01	1/8	6	9 to 11
E210-U02	1/4	8	14 to 16
E310-U02	1/4	8	14 to 16
E310-U03	3/8	10	24 to 26
E410-U02	1/4	8	14 to 16
E410-U03	3/8	10	24 to 26
E410-U04	1/2	12	30 to 32

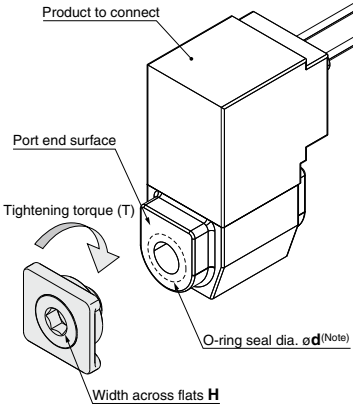

Note) The surface roughness of the seal surface of the product to be mated to the modular adapter must be less than Rz25.

Selection

⚠Warning

1. When utilizing a regulator or a pressure relief 3 port valve with an operator (dial, etc), assure that a large moment is not exerted on the bracket spacer when placing the product. Be sure to utilize a T-Bracket (Y200T/Y300T/Y400T) in the appropriate space in order to alleviate this.

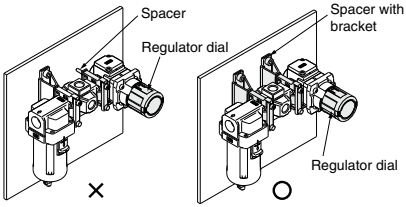

2. When making the product selection and mounting to a wall, determine the distance to the wall from the center of pipe (A dimension) and make your selection of the product so that, when attached, the product selected does not run into the wall.

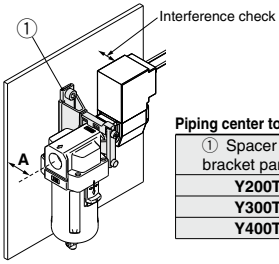

Piping center to wall surface distance

① Spacer with bracket part no.	**A**
Y200T	30
Y300T	41
Y400T	50

3. Give careful thought to the attachment angle, and assure that the attached product does not run into the wall mount prior to product selection.

In addition, assure that the product selected will not interfere with other products nearby.

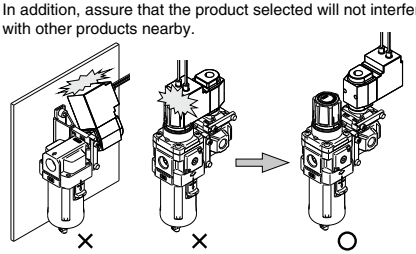

4. In the event that the customer is unable to determine the interference prior to product selection, please contact SMC.

⚠Caution

1. If products of brands other than SMC's are connected, this product is no longer guaranteed.