Customer Information Sheet

DRAWING No.: M80-754XXXX SHEET 2 OF 2	IF IN DOUBT - ASK	©	NOT TO SCALE	THIRD ANGLE PROJECTION	ALL DIMENSIONS IN mm

ORDER CODE:

M80-754XXXX

TOTAL No. OF WAYS
04, 06, 08, 10, 12, 14,
16, 18, 20, 26, 34, 44

FINISH:
22 - GOLD ON CONTACT AREA
TIN/LEAD ON TAILS
42 - GOLD ON CONTACT AREA
100% TIN ON TAILS
45 - GOLD

SPECIFICATONS:
MATERIAL:
MOULDING = POLYAMIDE 46 UL94V-0, BLACK
CONTACTS = PHOSPHOR BRONZE
FINISH:
CONTACTS:
22 = 0.75µ GOLD ON CONTACT AREA,
3.0µ 90/10 TIN/LEAD ON TAILS
42 = 0.75µ GOLD ON CONTACT AREA,
3.0µ 100% OVER NICKEL TIN ON TAILS
45 = 0.75µ GOLD
ELECTRICAL:
CURRENT RATING (25°C) = 3.0A MAX.
CURRENT RATING (85°C) = 2.2A MAX.
WORKING VOLTAGE = 120V AC/DC
VOLTAGE PROOF = 360V AC/DC
CONTACT RESISTANCE:
INITIAL = 20 mΩ MAX.
AFTER CONDITIONING = 25 mΩ MAX.
INSULATION RESISTANCE:
INITIAL = 1000 MΩ MIN.
AFTER CONDITIONING = 100 MΩ MIN.
MECHANICAL:
DURABILITY = 500 OPERATIONS
ENVIRONMENTAL:
TEMPERATURE RANGE = -55°C TO +125°C
PACKING:
TUBE
FOR COMPLETE SPECIFICATION, SEE COMPONENT
SPECIFICIATION C005XX (LATEST ISSUE)

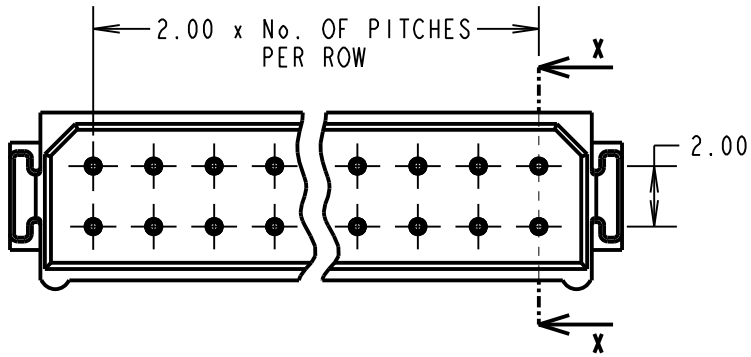

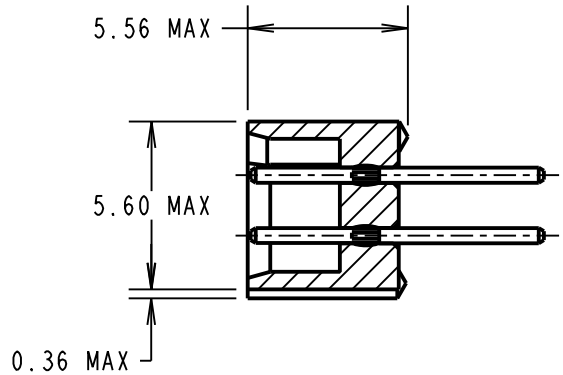

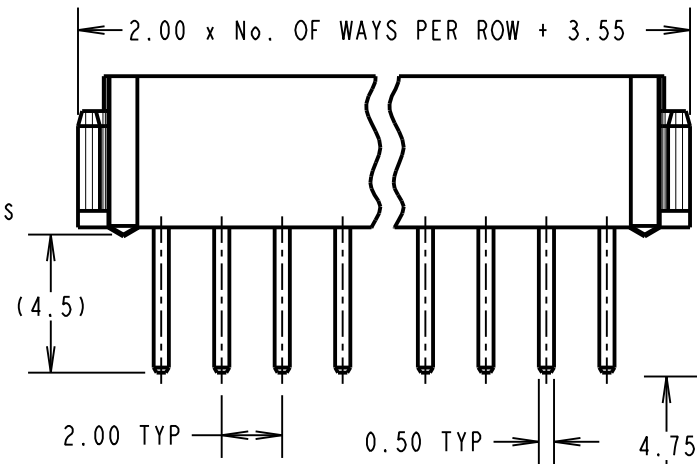

RECOMMENDED
PCB LAYOUT

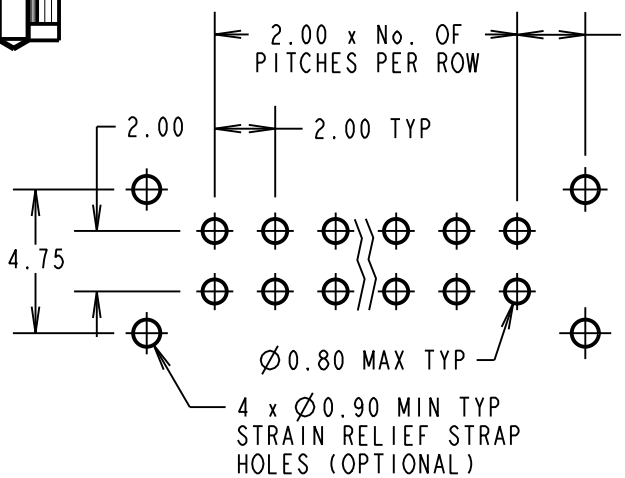

NOTES:
1. 2-OFF STRAIN RELIEF STRAPS
M80-0030006 MAY BE USED
WITH THIS CONNECTOR

SM	3	27.05.11	10832
NAME	ISS.	DATE	C/NOTE

APPROVED: S. MCCULLAGH
CHECKED: M. G. PLESTED
DRAWN: JM BROOKES
CUSTOMER REF.:
ASSEMBLY DRG:

HARWIN

HARWIN USA
TEL: 603 893 5376
FAX: 603 893 5396
mis@harwin.com

HARWIN Europe (UK)
TEL: 023 9231 4545
FAX: 023 9231 4590
mis@harwin.co.uk

HARWIN Asia
TEL: +65 6 779 4909
FAX: +65 6 779 3868
mis@harwin.com.sg

THIS DRAWING AND ANY INFORMATION OR DESCRIPTIVE MATTER SET OUT HEREON ARE CONFIDENTIAL AND COPYRIGHT PROPERTY OF THE HARWIN GROUP AND MUST NOT BE DISCLOSED, LOANED, COPIED OR USED FOR MANUFACTURING, TENDERING OR FOR ANY OTHER PURPOSE WITHOUT THEIR WRITTEN PERMISSION.

TOLERANCES
X. = ±1mm
X.X = ±0.25mm
X.XX = ±0.10mm
X.XXX = ±0.01mm
ANGLES = ±5°
UNLESS STATED

MATERIAL: SEE ABOVE
FINISH: SEE ABOVE
S/AREA: mm²

TITLE: DATAMATE DIL
VERTICAL MALE PC TAIL
ASSEMBLY - UNLATCHED

DRAWING NUMBER: **M80-754XXXX**

SHT 2 OF 2