THIS DRAWING IS UNPUBLISHED. RELEASED FOR PUBLICATION -.- .
© COPYRIGHT - By - ALL RIGHTS RESERVED.

LOC	DIST
GP	00

REVISIONS

P	LTR	DESCRIPTION	DATE	DWN	APVD
	B	REVISED PER ECO-14-007966	04JUN2014	CJV	SLB

1. HOUSING: FLAME RETARDANT 94V-2 RATED NYLON, COLOR BLACK.
   CONTACTS: BRASS
2. GOLD PLATED FOR A LENGTH OF .150 MIN FROM MATING END, .000030 MIN GOLD IN MATED AREA, .000100 MIN TIN ON OPPOSITE END, BOTH OVER .000050 MIN NICKEL.
   -OR-
   GOLD FLASH OVER .000030 PALLADIUM NICKEL PLATED FOR LENGTH OF .150 MIN FROM MATING END, .000030 MIN PALLADIUM NICKEL IN MATED AREA, .000100 MIN TIN ON OPPOSITE END, BOTH OVER .000050 MIN NICKEL.
3. GOLD PLATED FOR LENGTH OF .150 MIN FROM MATING END, GOLD FLASH IN MATED AREA, .000100 MIN TIN ON OPPOSITE END, BOTH OVER .000050 MIN NICKEL.

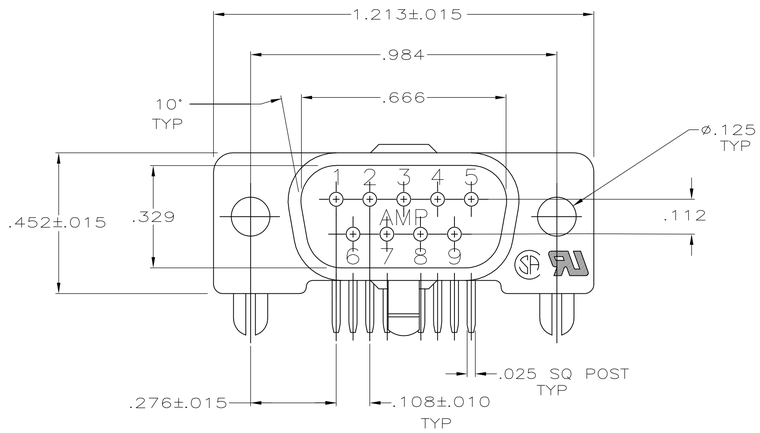

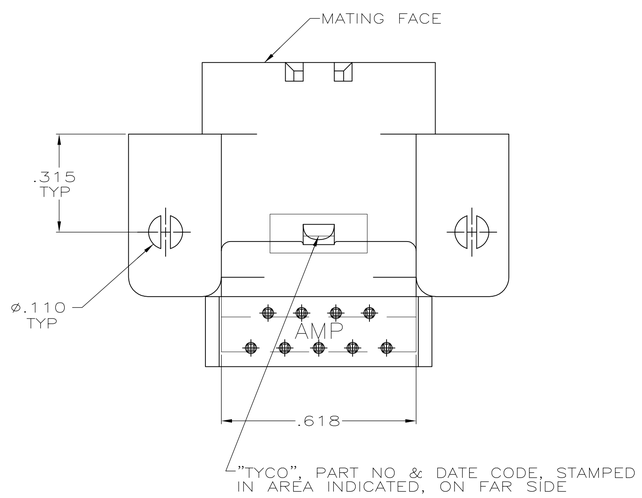

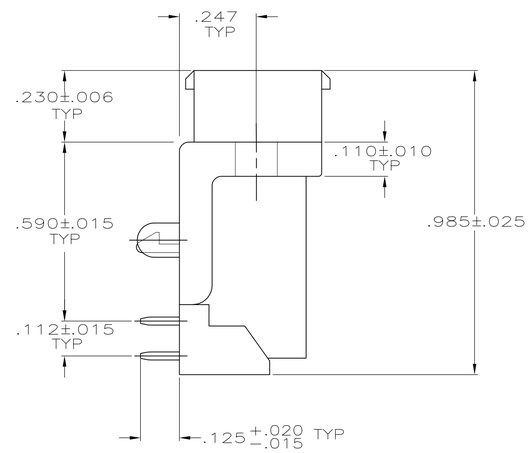

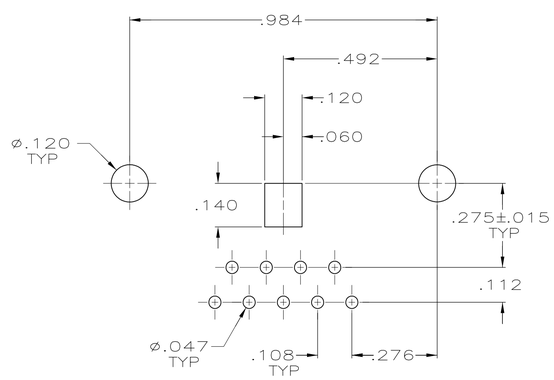

P.C. BOARD MOUNTING DIMENSIONS

(PUNCH FROM CONNECTOR SIDE ONLY)
.062 PC BOARD THICKNESS

CONTACT FINISH	PART NUMBER
3	5745001-3
2	5745001-2

THIS DRAWING IS A CONTROLLED DOCUMENT.

DIMENSIONS: INCHES

TOLERANCES UNLESS OTHERWISE SPECIFIED:
0 PLC ± -
1 PLC ± -
2 PLC ± -
3 PLC ± .005
4 PLC ± -
ANGLES ± -

MATERIAL 1

FINISH SEE TABLE

DWN S.WAITMAN 19APR05
CHK J.GERACE 19APR05
APVD M.WALMSLEY 19APR05

PRODUCT SPEC 108-40025
APPLICATION SPEC -
WEIGHT -

CUSTOMER DRAWING

TE Connectivity

NAME PLUG ASSEMBLY, SIZE 1, 9 POS, RIGHT ANGLE, .590 SERIES, .025 SQ POSTS, PANEL LOCKS, AMPLIMITE HDJ

SIZE	CAGE CODE	DRAWING NO	RESTRICTED TO
A1	00779	C-5745001	-

SCALE 4:1 SHEET 1 OF 1 REV B

4805 (3/11)