REVISIONS

UNLESS OTHERWISE NOTED

DIMENSIONS ARE IN INCHES

TOLERANCES ARE:

ONE PLACE DECIMALS ±.1
TWO PLACE DECIMALS ±.01
THREE PLACE DECIMALS ± .005
FOUR PLACE DECIMALS ± .002
ANGLES ± 5°

TITLE: 2mm QUAD ROW FULL SHROUD TERMINAL ASM

DWG NO: TMMS-1XX-XX-XX-Q-XX-FS

SHEET 1 OF 2

TMMS-1XX-XX-XX-Q-XX-FS

No OF POSITIONS
-05 THRU -50

LEAD STYLE
-01: .130 [3.30] POST

PLATING
-G: 10μ" GOLD IN CONTACT AREA, 10μ" GOLD ON TAIL
-S: 30μ" SELECTIVE GOLD IN CONTACT AREA, MATTE TIN ON TAIL
-L: 10μ" SELECTIVE GOLD IN CONTACT AREA, MATTE TIN ON TAIL
-F: 3μ" SELECTIVE GOLD IN CONTACT AREA, MATTE TIN ON TAIL
-FM: 3μ" SELECTIVE GOLD IN CONTACT AREA, MATTE TIN ON TAIL
-LM: 10μ" SELECTIVE GOLD IN CONTACT AREA, MATTE TIN ON TAIL
-SM: 30μ" SELECTIVE GOLD IN CONTACT AREA, MATTE TIN ON TAIL

ROW SPECIFICATION
-Q: QUAD ROW (SEE FIG. 1)
(USE TMMS-XX-Q-XX-FS)

OPTION
-RA: RIGHT ANGLE (SEE FIG 2)
(LEAVE BLANK FOR THRU HOLE VERSION)
* -BL: MOLDED BOARD LOCKS
(AVAILABLE WITH -RA ONLY)
[USE TMMS-XX-Q-XX-BL-FS]
(SEE FIG 3, SHT 2)
* -A: MOLDED ALIGNMENT PIN
(AVAILABLE WITH -RA ONLY)
[USE TMMS-XX-Q-XX-A-FS]
(SEE FIG.4, SHT 2)

OPTIONS
-FS: FULL SHROUD
(USE TMMS-XX-Q-XX-FS)

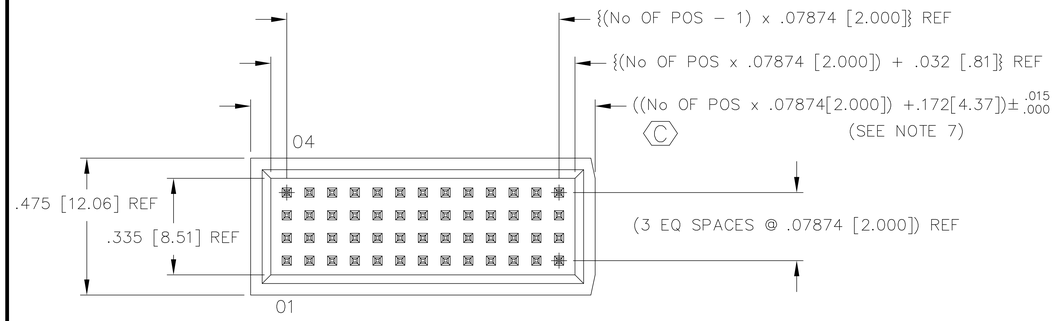

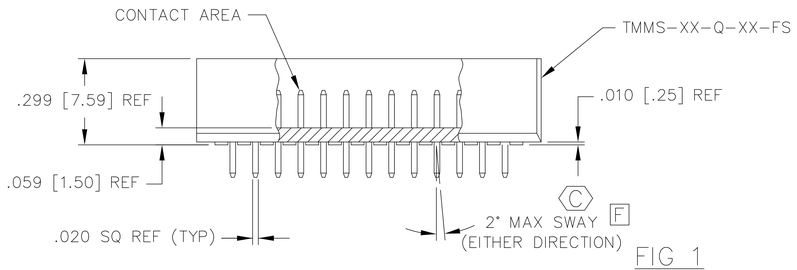

FIG 1

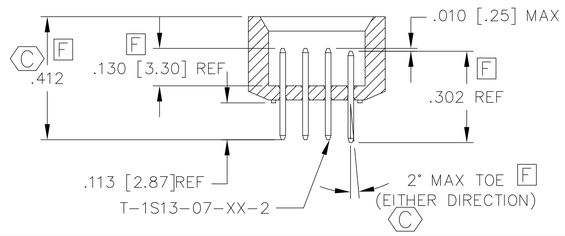

NOTES:
1.) MAX. ALLOWABLE BOW: .005 IN/IN AFTER ASSEMBLY.
2.) MAX. PIN ROTATION IN BODY: 2°
3.) PUSHOUT FORCE SHALL BE 1 lb MIN.
4.) C REPRESENTS A CRITICAL DIMENSION.
5.) ALL DIMENSIONS IN BRACKETS [ ] TO BE MILLIMETERS.
6.) ALL DIMENSIONS TO BE SYMMETRICAL ABOUT C.L. WITHIN A VARIANCE OF .002 [.051] UNLESS OTHERWISE NOTED.
7.) .010[.25] MAX CUT FLASH (BRUSH CLEAN AS NECESSARY).

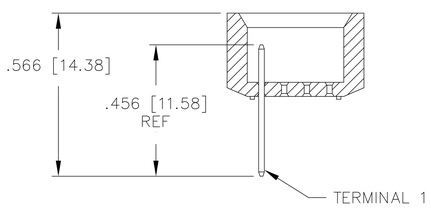

IN-PROCESS 1

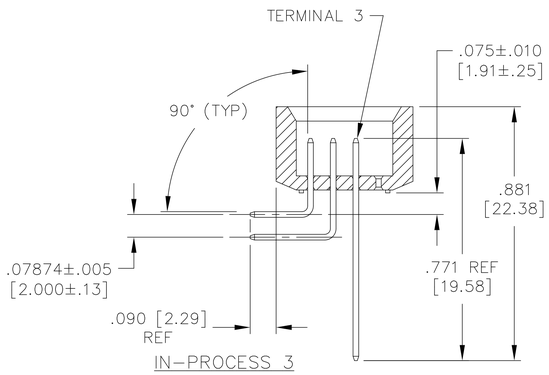

IN-PROCESS 3

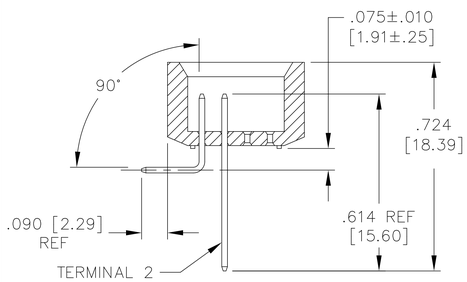

IN-PROCESS 2

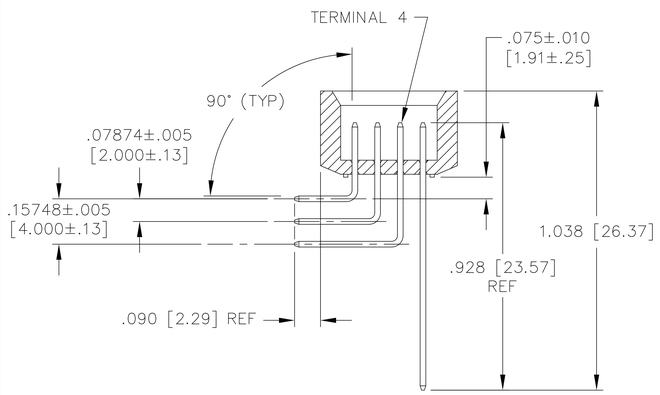

IN-PROCESS 4

TERMINAL 1	TERMINAL 2	TERMINAL 3	TERMINAL 4
T-1S13-13-XX-2	T-1S13-14-XX-2	T-1S13-23-XX-2	T-1S13-24-XX-2

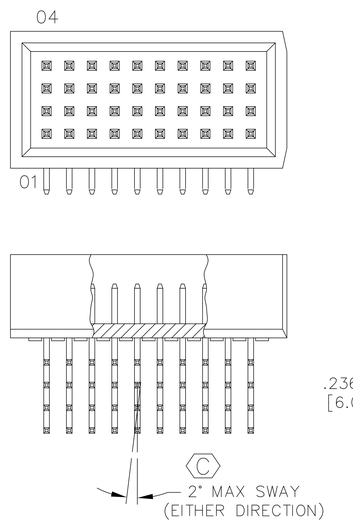

FIG 2
-RA: RIGHT ANGLE OPTION
(DIFFERENT AS SHOWN, OTHERWISE SAME AS FIG 1)

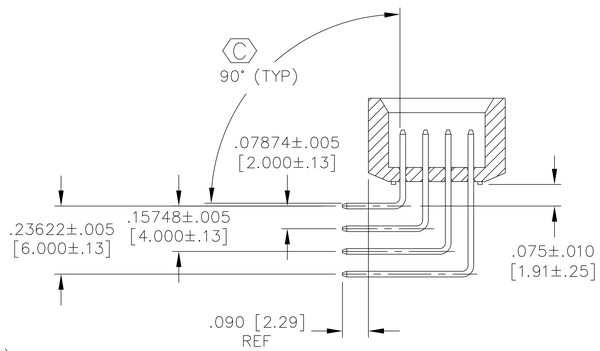

MATERIAL:
INSULATOR:
LCP VECTRA E130, UL
RATED 94V-0
COLOR: BLACK
TERMINAL:
SPRING TEMPER PHOS BRONZE

EXISPROD\ASSEMBLY\2MM
TMMSQAM1

samtec

520 PARK EAST BLVD. NEW ALBANY, INDIANA 47150
PHONE (812) 944-6733 P.O. BOX 1147
CODE 55322

MADE BY: CHAD F 12/17/2002

TMMS-1XX-XX-XX-Q-XX-FS
SHEET 1 OF 2

PROPRIETARY NOTE

THIS DOCUMENT CONTAINS INFORMATION CONFIDENTIAL AND PROPRIETARY TO SAMTEC INC. AND SHALL NOT BE REPRODUCED OR TRANSFERRED TO OTHER DOCUMENTS OR DISCLOSED TO OTHERS OR USED FOR ANY PURPOSE OTHER THAN THAT FOR WHICH IT WAS OBTAINED WITHOUT THE EXPRESSED WRITTEN CONSENT OF SAMTEC INC.