SWITCHCRAFT, INC. 5555 N. Elston Ave.
Chicago, IL 60630 • 773 792-2700 • FAX: 773 792-2129
www.switchcraft.com

Hi-D Switch® PC MOUNT SWITCHES

SERIES H-100, H-100PC, H-200, H-200PC

SERIES H100, H200

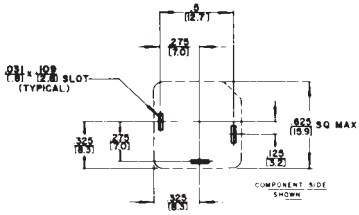

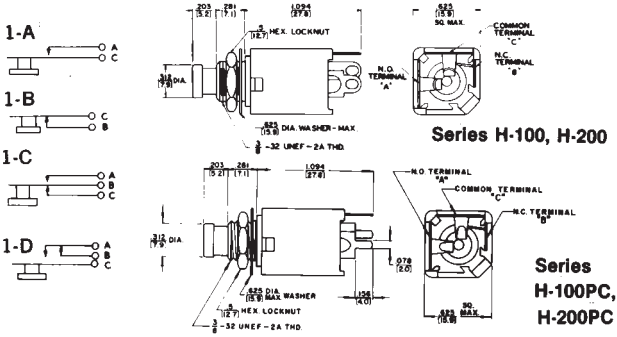

DIMENSIONS ARE FOR REFERENCE ONLY Inch (mm)