THIS DRAWING IS UNPUBLISHED. RELEASED FOR PUBLICATION -,- .
© COPYRIGHT - By - ALL RIGHTS RESERVED.

REVISIONS 変更

P	LTR	DESCRIPTION	DATE	DWN	APVD
	A1	REVISED PER ECR-17-012979	08SEP2017	BDA	TD

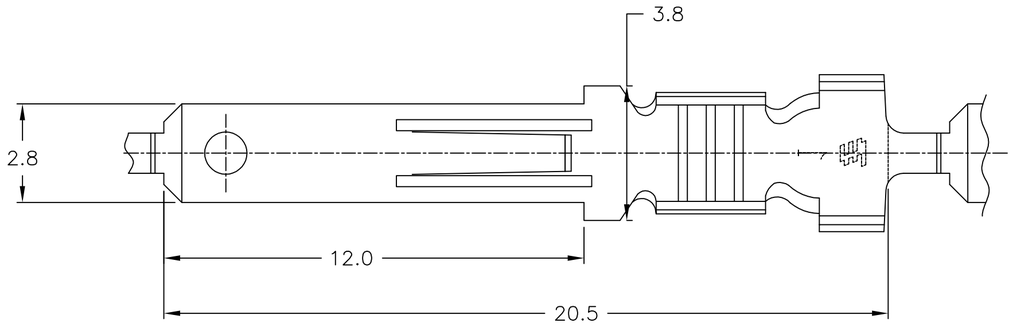

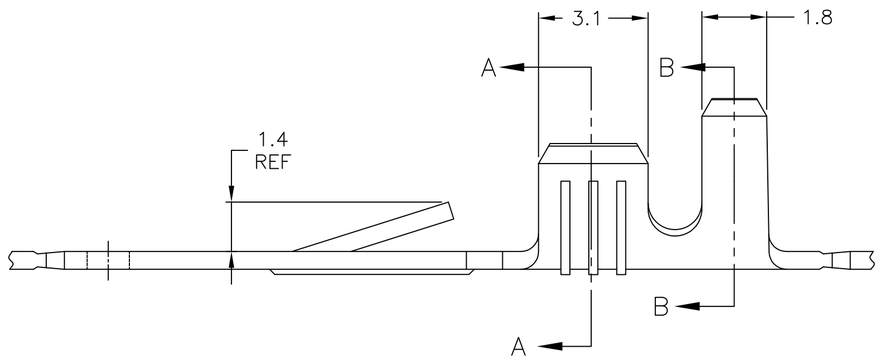

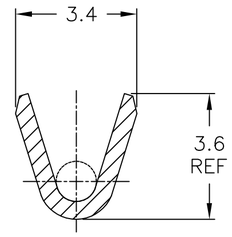

SECTION A–A

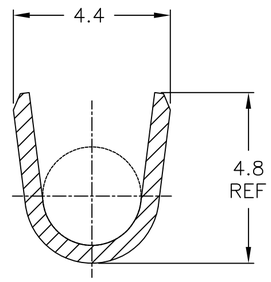

SECTION B–B

OBSOLETE	170041-3 (170014-3 L.P.)	TIN PLATING	BRASS	~~170041-3~~
OBSOLETE	170041-2 (170014-2 L.P.)	NONE	BRASS	~~170041-2~~
	170041-1 (170014-1 L.P.)	NONE	BRASS	170041-1
	COMBINATION NO.	FINISH	MATERIAL	PART NO.

WIRE RANGE: AWG #20-16 mm²
INSULATION DIA: ?.080-.120] 2.03~3.05

THIS DRAWING IS A CONTROLLED DOCUMENT.

DIMENSIONS: 単位: 耗 mm

TOLERANCES UNLESS OTHERWISE SPECIFIED: 一般公差

0 PLC	±
1 PLC	± 0.4
2 PLC	± 0.4
3 PLC	± 0.4
4 PLC	±
ANGLES	±

MATERIAL 材料: SEE TABLE

FINISH 仕上: -

DWN RAVI S 21NOV2016
CHK LI DAISY 21NOV2016
APVD DING TIM 21NOV2016
PRODUCT SPEC 製品規格 108-5005
APPLICATION SPEC 取付適用規格
WEIGHT

TE Connectivity

NAME 名称: .110 SERIES FASTIN - FASTON TAB LOOSE PIECE

-

SIZE: A2 | CAGE CODE: 00779 | DRAWING NO 番号: C-170041 | RESTRICTED TO: —

CUSTOMER DRAWING | SCALE 尺度: 4:1 | SHEET 1 OF 1 | REV A1

170041

1471-9 (1/15)