PART NAME	PLASTIBOX (STYLE F)	PART No.	PS-11553

MATERIAL: HIGH-IMPACT ABS
COLOR: BLACK OR GRAY
FINISH: TEXTURED BODY WITH SMOOTH TOP INSERT

SIX (6) M3 x 9.2mm LG. SCREWS SUPPLIED FOR ASSEMBLING TOP.

FOUR (4) NON-SKID PUSH-ON FEET SUPPLIED

*-USABLE AREA ON TOP AVAILABLE FOR CUSTOM MOLDING.

NOTE: ALL DIMENSIONS HAVE ±0.015 TOLERANCE UNLESS OTHERWISE SPECIFIED.

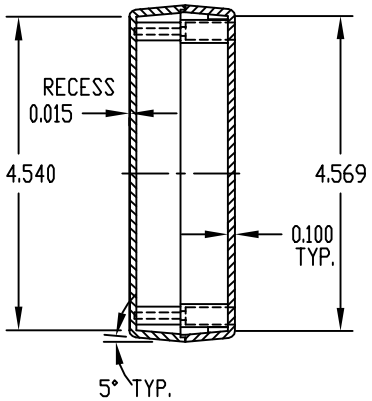

MOUNTING BOSSES USE EITHER M2.5 METRIC OR #4 STD. SHEET METAL SCREWS x 0.188" LG. (NOT SUPPLIED)

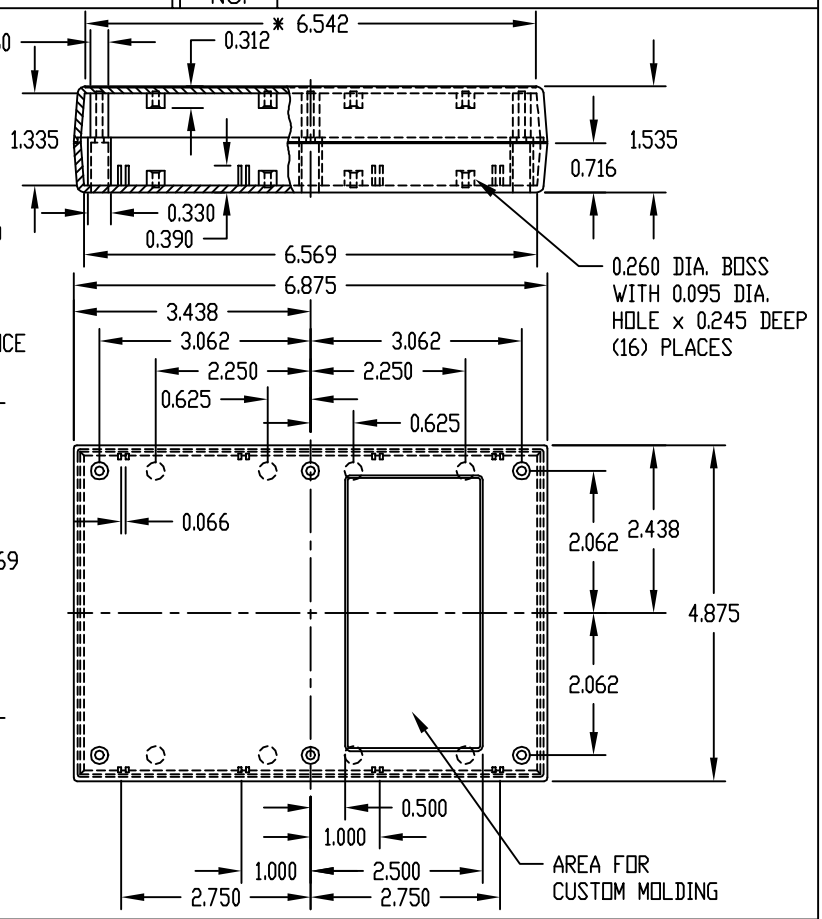

REVISED 1-21-09

PART NAME	PLASTIBOX (STYLE F)	PART No.	PT-11557

MATERIAL: HIGH-IMPACT ABS
COLOR: BLACK OR GRAY
FINISH: TEXTURED BODY WITH TEXTURED TOP

SIX (6) M3 x 9.2mm LG. SCREWS SUPPLIED FOR ASSEMBLING TOP.

FOUR (4) NON-SKID PUSH-ON FEET SUPPLIED

NOTE: ALL DIMENSIONS HAVE ±0.015 TOLERANCE UNLESS OTHERWISE SPECIFIED.

MOUNTING BOSSES USE EITHER M2.5 METRIC OR #4 STD. SHEET METAL SCREWS x 0.188" LG. (NOT SUPPLIED)

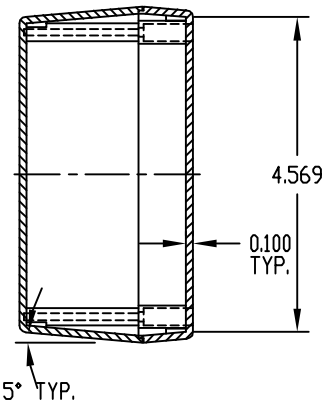

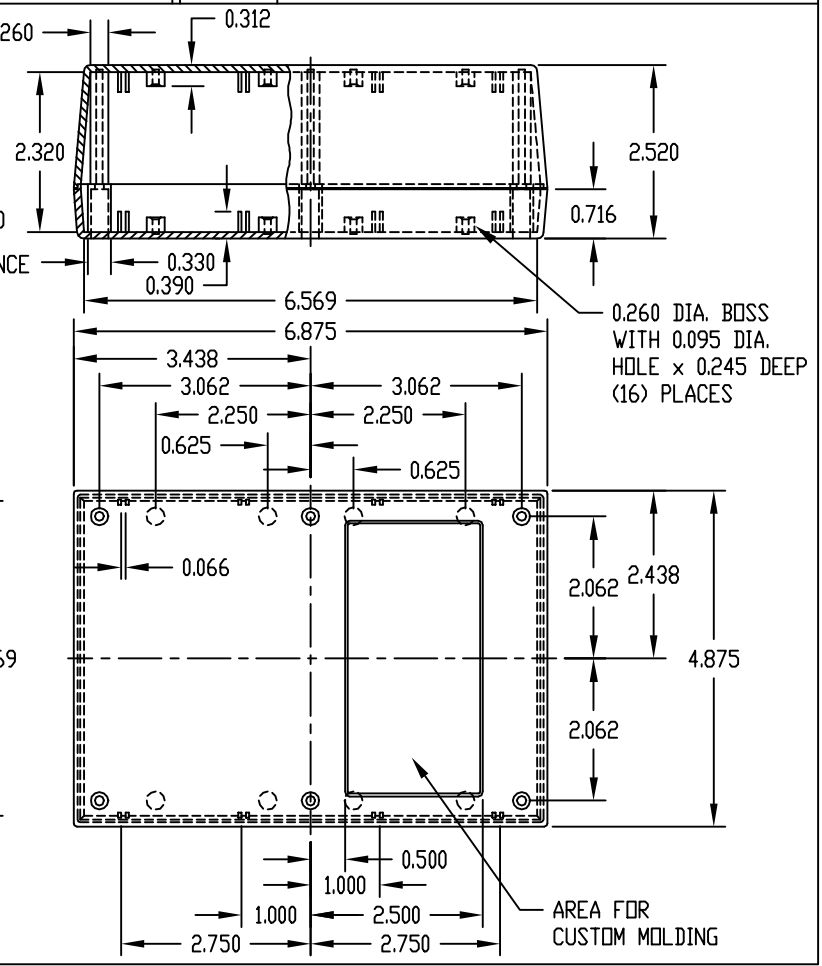

REVISED 1-21-09