THIS DRAWING IS UNPUBLISHED. RELEASED FOR PUBLICATION 1997
© COPYRIGHT 1997 BY TYCO ELECTRONICS CORPORATION, ALL RIGHTS RESERVED.

LOC	DIST
A1	-

REVISIONS

P	LTR	DESCRIPTION	DATE	DWN	APVD
	B4	REVISED PER ECO-10-002990	28JAN10	KK	HMR

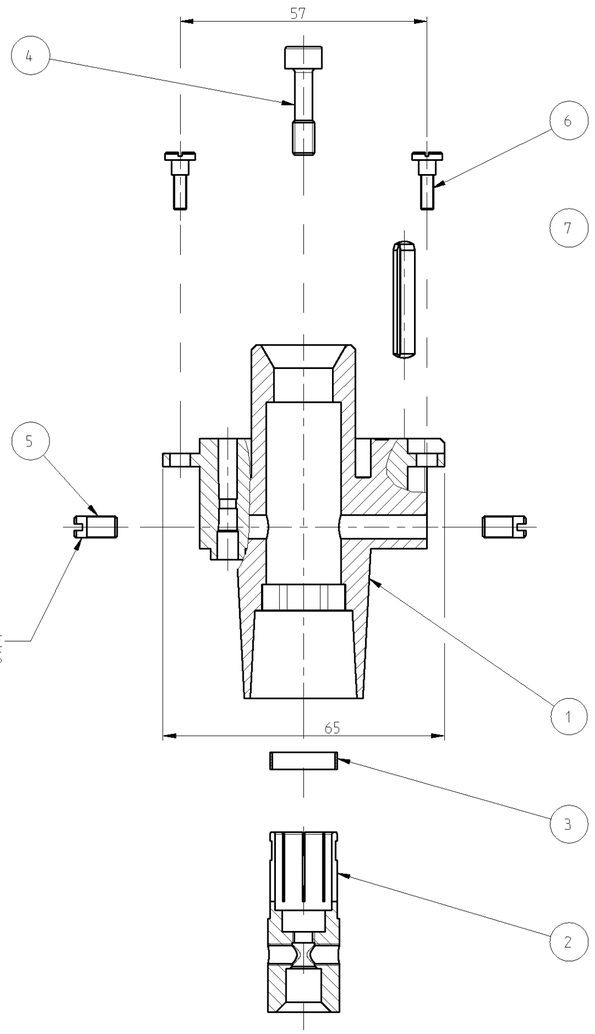

PIN/BOLTING TERMINATION VARIANT

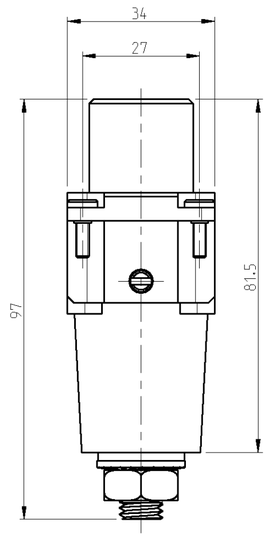

SCREW VARIANT

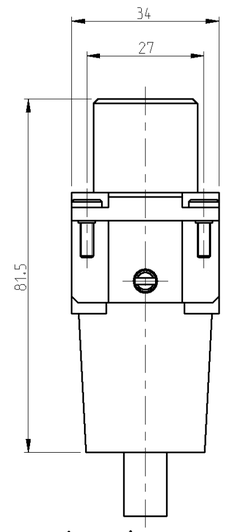

4 OBSOLETE PARTS: OBSOLETE CIS STREAMLINING PER D.RENAUD/D.SINISI

5 OBSOLETE

NOTES:

1. PIN/BOLT VARIANT: POS.4 FITTED WITH POS.17 BOLTING AND POS.14, 15 AND 16 MOUNTED ON BOLT TERMINATION
2. SCREW VARIANT: POS.4 OF FITTED WITH POS.9 BOLTING POS.6, 7 AND 8 IN POLY BAG PACKING
3. PACKAGING QUANTITY: 5 PIECES IN A CARTON BOX

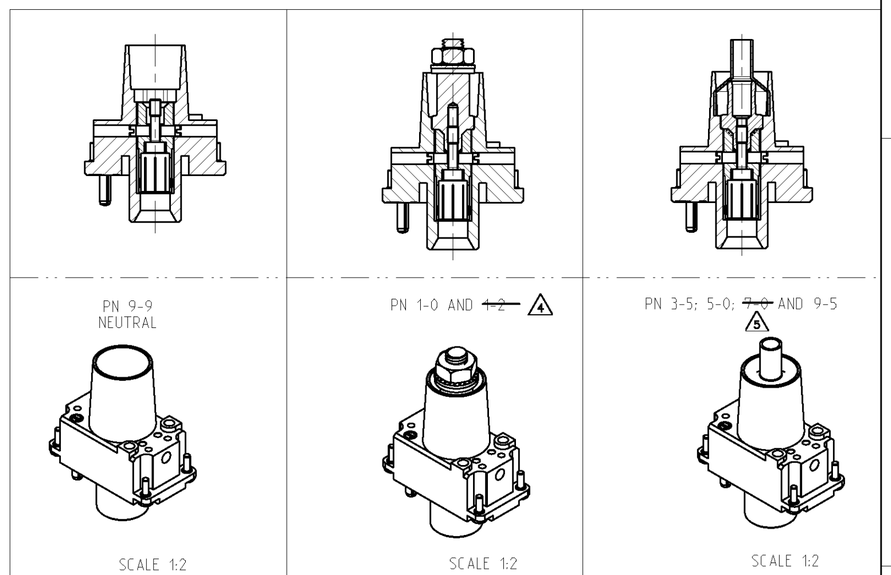

PIN/BOLTING TERMINATION VARIANT

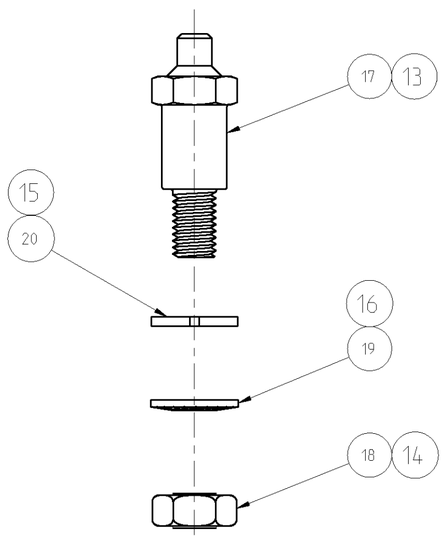

SCREW VARIANT

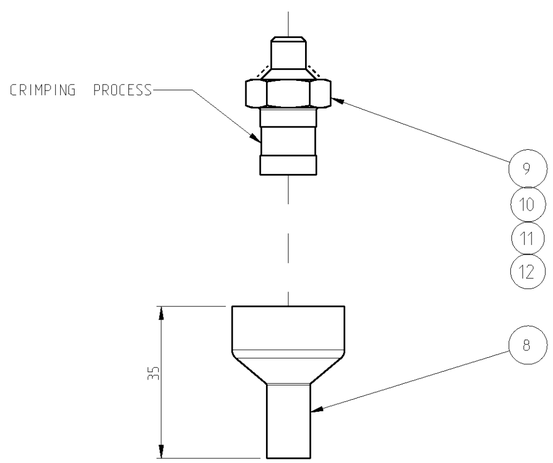

9-9	1-0	~~1-2~~ 4	9-5	~~7-0~~ 5	5-0	3-5	DESCRIPTION		ITEM NO	SURFACE	COLOR	REMARKS
-	1	-	-	-	-	-	WASHER, PLAIN	BRASS	20	SILVERED		DIN 125
-	1	-	-	-	-	-	WASHER	STEEL	19	SILVERED		SKS10
-	1	-	-	-	-	-	NUT M10	MILD STEEL	18	SILVERED		DIN EN 28673
-	1	-	-	-	-	-	BOLT TERMINATION FOR SOCKET CONTACT AG	CuZn39Pb2	17	SILVERED		
-	-	1	-	-	-	-	WASHER	STEEL	16	SILVERED		SKS12
-	-	1	-	-	-	-	WASHER, PLAIN	BRASS	15	SILVERED		DIN 125
-	-	1	-	-	-	-	NUT M12	MILD STEEL	14	SILVERED		DIN EN 28673
-	-	1	-	-	-	-	BOLT TERMINATION FOR SOCKET CONTACT AG	CuZn39Pb2	13	SILVERED		
-	-	-	1	-	-	-	BARREL 95mm2	CuTeP(2.1546)	12	SILVERED		
-	-	-	-	1	-	-	BARREL 70mm2	CuTeP(2.1546)	11	SILVERED		
-	-	-	-	-	1	-	BARREL 50mm2	CuTeP(2.1546)	10	SILVERED		
-	-	-	-	-	-	1	BARREL 35mm2	CuTeP(2.1546)	9	SILVERED		
-	-	-	1	1	1	1	SHRINKABLE TUBE	POLYOLEFIN	8		BLACK	35mm
2	2	2	2	2	2	2	GROOVED PINS	STAINL.STEEL	7	BLANK		DIN EN 28740
4	4	4	4	4	4	4	SCREW, SLOTTED PAN HEAD	STAINL.STEEL	6	BLANK		DIN 923
2	2	2	2	2	2	2	SCREW M5	STAINLESS STEEL	5	BLANK		DIN 427
1	1	1	1	1	1	1	SCREW, HEX. SOCKET HEAD CAP	STAINL.STEEL	4	BLANK		SIMILARLY DIN EN ISO 4762
1	1	1	1	1	1	1	ROUND SPRING	STAINL.STEEL	3	BLANK		
1	1	1	1	1	1	1	SOCKET CONTACT FOR AG	Cu Sn 8	2	SILVERED		
1	1	1	1	1	1	1	FEMALE INSERT AG	PA66 (Ultramid A3x3G5)	1			

AM-1P-360-35.AG.Bu.C	
AM-1P-360-50.AG.Bu.C	
AM-1P-360-70.AG.Bu.C	
AM-1P-360-95.AG.Bu.C	
AM-1P-360.Bu-AG.M12	
AM-1P-360.Bu-AG.M10	
AM-1P-360.Bu-AG	

THIS DRAWING IS A CONTROLLED DOCUMENT FOR TYCO ELECTRONICS CORPORATION. IT IS SUBJECT TO CHANGE AND THE CONTROLLING ENGINEERING ORGANIZATION SHOULD BE CONTACTED FOR THE LATEST REVISION

DIMENSIONS: mm

TOLERANCES UNLESS OTHERWISE SPECIFIED: n.ISO 8015; n.ISO 2768-mH-E; n.DIN 16901-120
0 PLC ±
1 PLC ±
2 PLC ±
3 PLC ±
4 PLC ±
ANGLES ±

MATERIAL -

FINISH -

DWN Kramer 24.11.97
CHK Schweiger 24.11.97
APVD -
PRODUCT SPEC 108-74021
APPLICATION SPEC 114-74023
WEIGHT ca. 180g

Tyco Electronics
Tyco Electronics,AMP.GmbH
53757.SanktAugustin.Germany

NAME ASSEMBLY SOCKET INSERT AG AM-4P/13

SIZE	CAGE CODE	DRAWING NO	RESTRICTED TO
A2	00779	C-1110028	-

CUSTOMER DRAWING

SCALE 1:1 SHEET 1 OF 1 REV B4