MATERIAL NUMBER	ENGINEERING NUMBER	MATERIAL NUMBER ON TAPE	ENGINEERING NUMBER ON TAPE	WIRE SIZE AWG	INSULATION COLOR	TERMINAL ID MIN	MAX. WIRE INSUL. DIA.		LENTH "L" MAX	"H" ±.010/0.25
							STANDARD END	FUNNEL END		
192020063	A-945-DK	192020007	A-945-DKT	18-22	DK RED	.062/1.57	.161/4.09	.147/3.74	1.070/27.18	1.522/38.67
192020019	B-931-DK	192020021	B-931-DKT	14-16	DK BLUE	.081/2.57	.199/5.05	.185/4.70	1.070/27.18	1.524/38.71
192020039	C-946-DK	192020041	C-946-DKT	10-12	DK YELLOW	.131/3.33	.276/7.01	.261/6.63	1.150/29.21	1.561/39.65

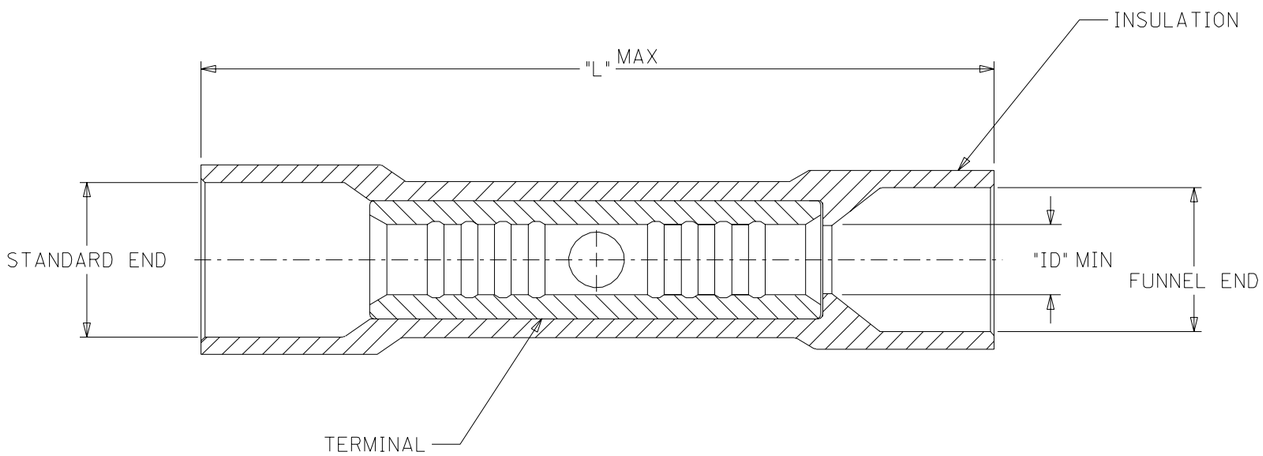

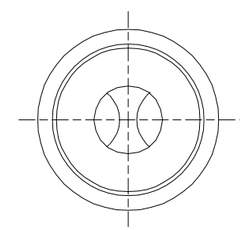

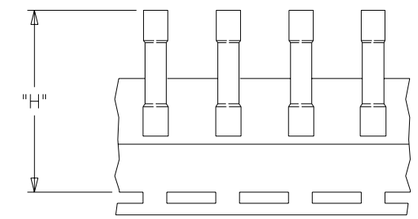

PARTS ON TAPE

SALES DRAWING

NOTES:
1. MATERIAL: COPPER.
2. PLATING: ELECTRON-TIN.
3. INSULATION: 6/6 NYLON

REV	DESCRIPTION
A	NEW RELEASE EC NO. ETC2004-0207 DRWN: BRE 04/04/23 CH'K: HEB 04/04/23 APPR: RWD 04/04/23

QUALITY SYMBOLS
MAJOR =0
CRITICAL (C) =0

GENERAL TOLERANCES: (UNLESS SPECIFIED)

	mm	INCH
4 PLACES	±0.	±.
3 PLACES	±0.	±.005
2 PLACES	±0.13	±.01
1 PLACE	±0.25	±.
ANGULAR: ±1/2°		

DRAFT WHERE APPLICABLE MUST REMAIN WITHIN DIMENSIONS

SCALE 4:1
DESIGN UNITS ☐ mm ☒ INCH
THIRD ANGLE PROJECTION
DIMENSIONS: ☐ mm/INCH ☒ INCH/mm ☐ mm ONLY
SHT REV
REVISE ON CAD ONLY

DRAWN BY & DATE BRE 04/04/20
CHECKED BY & DATE HEB 04/04/20
APPROVED BY & DATE RWD 04/04/20

TITLE: FUNNEL ENTRY NYLON BUTTED BUTT SPLICES

molex MOLEX INCORPORATED

CAD FILENAME SD-19202-002 .DGN
MATERIAL NO. SEE CHART
DRAWING NO. SD-19202-002
SHEET NO. 1 OF 1

THIS DRAWING CONTAINS INFORMATION THAT IS PROPRIETARY TO MOLEX INCORPORATED AND SHOULD NOT BE USED WITHOUT WRITTEN PERMISSION.

SIZE B