REV	ECN.NO:	B Y	DATE
A0	NEW DWG	ING	10/06/02

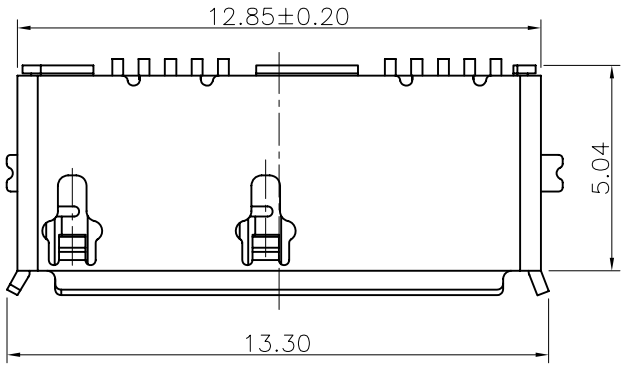

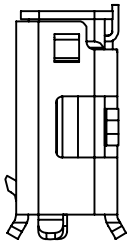

NOTES:
INSULATOR:LCP.COLOR–BLACK
USB CONTACT:BRASS 0.15MM THICKNESS,SELECTIVE GOLD PLATED ON CONTACT AREA, GOLD FLASH PLATED ON SOLDER TAIL,
80U" MIN NICKEL UNDERPLATED OVERALL,
SHELL:0.3MM THICKNESS ,FLASH PLATED ON THE SOLDERING TAB.

Pin Number	Signal Name
1	VBUS
2	D–
3	D+
4	ID
5	GND
6	MicB_SSTX–
7	MicB_SSTX+
8	GND_DRAIN
9	MicB_SSRX–
10	MicB_SSRX+
Shell	Shield

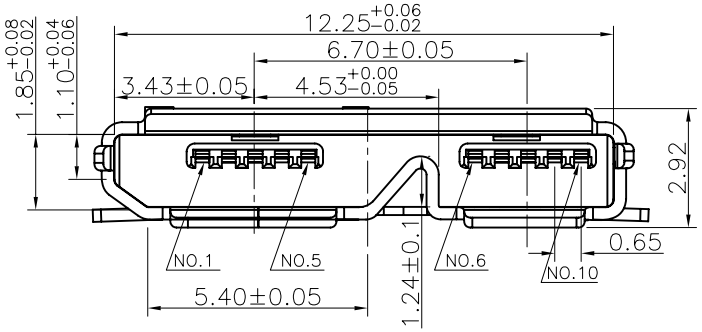

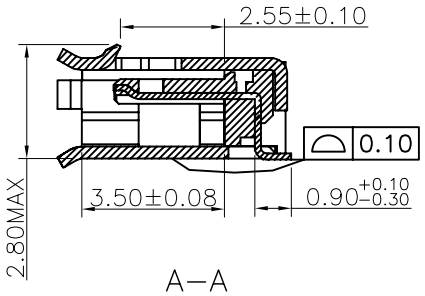

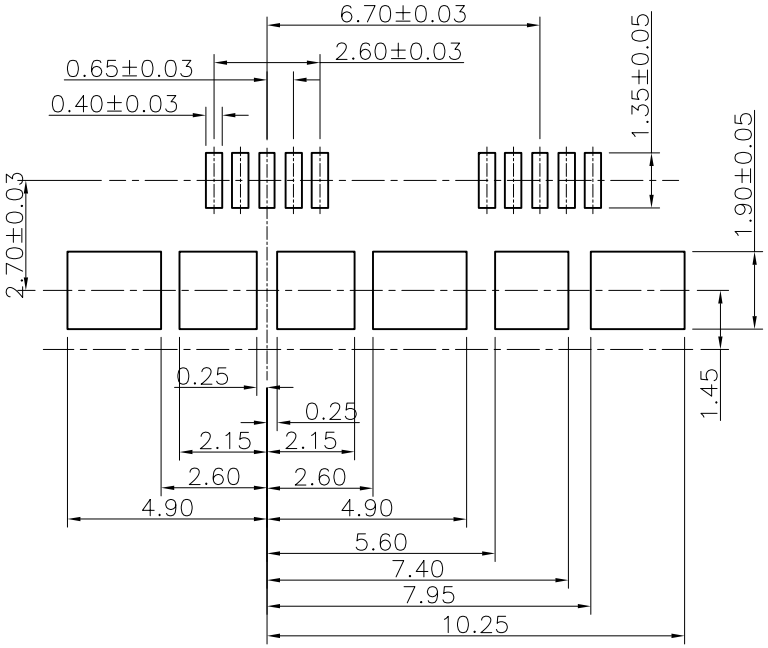

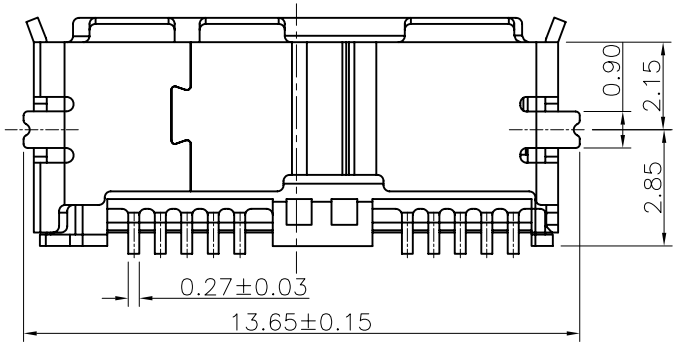

-TOLERANCES- UNLESS OTHERWISE SPECIFIED				CnC Tech . LLC				
					TITLE: MICRO USB 3.0-B SMT			
X.X	±0.25	X.X°	±3.00°	APPD:	PRODUCT NO: 1003–005–22100			
X.XX	±0.20	X.XX°	±1.00°	CHECK:	DATE	SCALE	UNIT	TYPE	PAGE
X.XXX	±0.10	X.XXX°	±0.05°	DRAW:	2010.06.02	FREE	MM	Z	1