REV.	DATE	ECR NO.	DESCRIPTION
NC	03/13/12	XXXXXX	INITIAL RELEASE

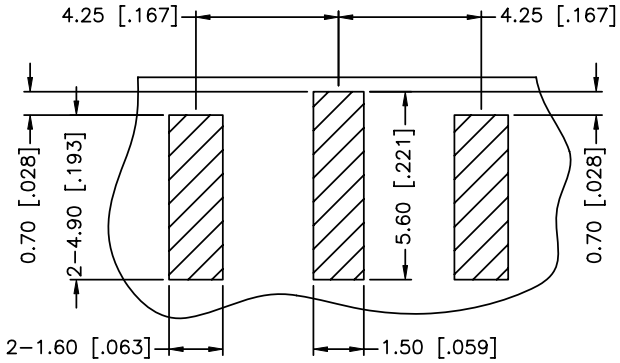

TOP VIEW

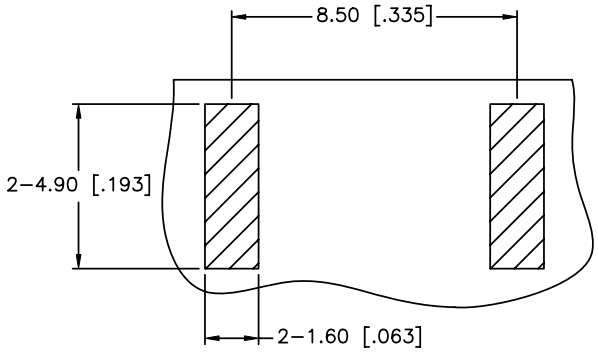

BOTTOM VIEW

RECOMMENDED PCB LAYOUT

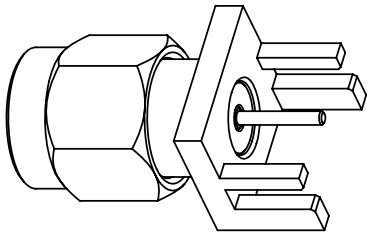

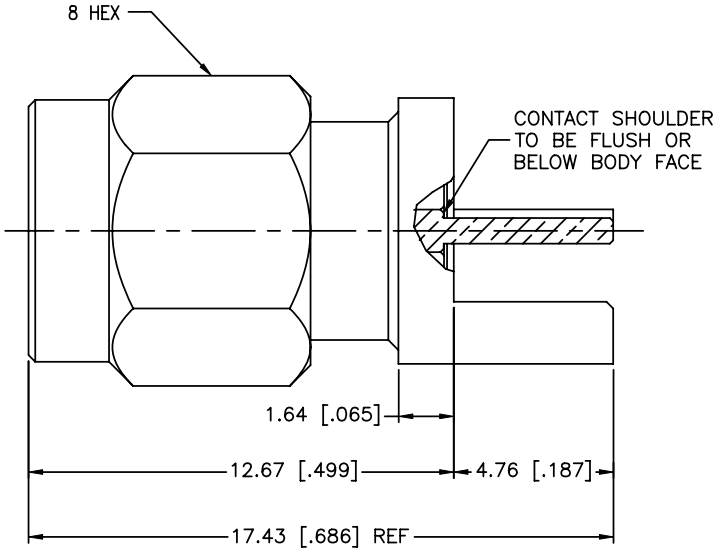

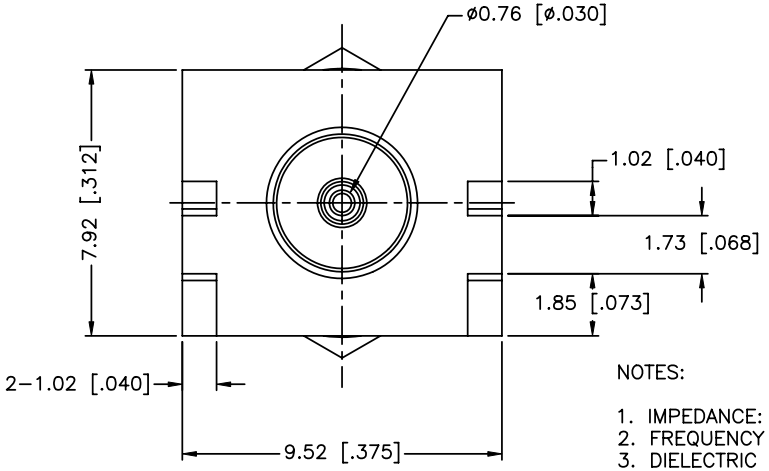

NOTES:

1. IMPEDANCE: 50 OHM
2. FREQUENCY RANGE: DC–18 GHZ
3. DIELECTRIC WITHSTANDING VOLTAGE: 1000 VRMS, MIN.
4. DURABILITY: 500 CYCLES MIN.
5. TEMPERATURE RANGE: –65°C TO +165°C
6. CONTACT PIN MUST WITHSTAND 6 LBS MIN. AXIAL IN BOTH DIRECTIONS AND 4 IN–OZ MIN. RADIAL FORCE.
7. BOARD THICKNESS=1.57 MM [.062"]

	DESCRIPTION	MATERIAL	FINISH	QTY
6	RETAINTING RING	STAINLESS STEEL	NATURAL	1
5	GASKET	SILICONE RUBBER	RED	1
4	SHELL	BRASS	GOLD	1
3	CONTACT PIN	BRASS	GOLD	1
2	INSULATOR	PTFE	NATURAL	1
1	BODY	BRASS	GOLD	1

UNLESS OTHERWISE SPECIFIED DIMENSIONS ARE IN MILLIMETERS. DIMENSIONS IN [ ] ARE IN INCHES AND FOR CUSTOMER REFERANCE ONLY.

UNLESS OTHERWISE SPECIFIED TOLERANCES FOR MILLIMETERS ARE:
0.5 – 8mm ± 0.20mm
8 – 30mm ± 0.40mm
30 – 120mm ± 0.50mm

UNLESS OTHERWISE SPECIFIED TOLERANCES FOR INCHES ARE:
.020 – .315 = ± 0.007"
.315 – 1.180 = ± 0.015"
1.180 – 4.724 = ± 0.020"

DO NOT SCALE DRAWING

APPROVALS		DATE
DRAWN	I.XU	03/13/12
CHECKED		
ISSUED		
SHEET	1 OF 1	

CAD FILE C:/CONNEX/132366–10.DWG

Amphenol Connex

PART DESCRIPTION
SMA END LAUNCH PLUG RECEPTACLE, FLUSH FLANGE (.062" BOARD THICKNESS)

PART NO. 132366–10

DWG. NO. 132366–10 | REV. NC | SIZE A | SCALE NA