MIL-DTL-38999 Circular Connectors

And 38999-Style Connectors

Withstand Harsh Environments with Rugged, Capable Connectors for Signal, Power, Control, and Optical Needs

INTRODUCTION 4

MIL-DTL-38999 CONNECTORS

Series I 18
Series III 30
Series IV 44

MIL-DTL-38999 SERIES III STYLE CONNECTORS

Panel Seals 56
Hermetic Connectors 62
PCB Connectors
Board-Mount 38999 Connectors 65
Marine Connectors
DEUTSCH DTS-B Connectors 102
Band It Platform Connectors
Aluminum and Stainless Steel Connectors with Integral Backshells 110
Power Connectors
DEUTSCH DTS-HC Connectors 120
POLAMCO Connectors 125
Lanyard Connectors
1760 Series Connectors (MIL-DTL-38999/31 and ACT98 and commercial /29) 137
Ultra-Dense Connectors
DEUTSCH Wildcat 38999 Connectors 138
38999 Series 1.5 Connectors
DEUTSCH HDJ/JN1003 Series Connectors 144
High-Speed Connectors
Quadrax Connectors 156
CeeLok FAS-X Connectors 173
High-Speed COTS Interface Connectors
POLAMCO USB Connectors 186
POLAMCO RJ45 Connectors 189
Fiber-Optic Connectors
Introduction 193
MC801 Connectors 195
DEUTSCH MC3 MKII Connectors 199
DEUTSCH MC4 Connectors 205
DEUTSCH MC5 Connectors 211
DEUTSCH MC6 Connectors 217
AviMT Connectors 224
38999-Style Connectors 226
PRO BEAM Inserts 233
MIL-T-29504 Style Optical Termini 235
Backshells and Rear Accessories 237
Specialty Connectors
DEUTSCH CBC Bussed Connectors 281
Assembly Instructions 286

TE Components . . . TE Technology . . . TE Know-how . . .

AMP | AGASTAT | CII | HARTMAN | KILOVAC | MICRODOT | NANONICS | POLAMCO | Raychem
SEACON | Rochester | DEUTSCH

Empower Engineers to Solve Problems, Moving the World Forward.

MIL-DTL-38999 Connectors

MIL-DTL-38999 Series	Coupling	DEUTSCH Connector Family	Shell Material
Series I	Bayonet	DJT	Aluminum
Series III	Threaded	DTS	Aluminum
		DTS-K, DTS-L, DTS-S	Stainless steel
		ACT	Composite
Series IV	Breech lock	DIV	Aluminum

MIL-DTL-38999 Series III Style Connectors

Marine Connectors	
DEUTSCH DTS-B Connectors	Marine bronze shell
High-Speed Connectors	
Quadrax Connectors	2 Gb/s
CeeLok FAS-X Connectors	10 Gb/s, 1 or 4 Ethernet channels
High-Speed COTS Interface Connectors	
POLAMCO RJ45 Connectors	Cat 6a
POLAMCO USB Connectors	USB 2.0 and 3.0
Power Connectors	
DEUTSCH DTS-HC Connectors	Up to 300 A
POLAMCO Connectors	Up to 1000 A
Lanyard Connectors	
1760 Series Connectors (MIL-DTL-38999/31 and ACT98 and commercial /29)	MIL-STD-1760 Types 1 and 2
PCB Connectors	
Board-Mount 38999 Connectors	
Fiber-Optic Connectors	
DEUTSCH MC3 MKII Connectors	DEUTSCH 2.5 mm termini
DEUTSCH MC4 Duplex Connectors	2.5 mm termini, compact Size 9 shell
DEUTSCH MC5 Connectors	DEUTSCH 1.25 mm termini
DEUTSCH MC6 Connectors	MT ferrule
MC801 Connectors	ARINC 801 termini
QPL Connectors	MIL-PRF-29504/4 and /5 termini
EB16 Connectors	EB16 contacts
PRO BEAM Inserts	Expanded beam termini
Ultra-Density Connectors	
DEUTSCH Wildcat 38999 Connectors	Nearly twice the contact density over standard Series III
Specialty Connectors	
DEUTSCH CBC Bussed Connectors	Internal contact bussing for grounding or power distribution
DEUTSCH Grounding Connectors	
38999 Series 1.5 Connectors	
DEUTSCH HDJ/JN1003 Series Connectors	38999 Series I bayonet coupling interface lengths and Series II diameters
Hermetic Connectors	
Overview/Capabilities	

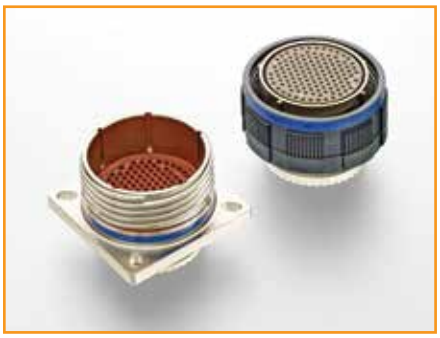

38999 Overview

MIL-DTL-38999 connectors are some of the most popular and widely used subminiature circular connectors for military and aerospace applications. With three coupling methods, nine shell sizes, and a wide variety of contact arrangements, the connectors help give you the range of choices you need. What's more, the original aluminum connectors have evolved to include stainless steel and composite shells—supported by a range of finishes.

38999-Style Connectors

Because of the widespread popularity of 38999 Series III connectors, the basic design has been adapted to a great many additional configurations. These 38999-style connectors include versions for power, fiber optics, filtering, high-speed networking, commercial interfaces, pc board interfaces, and higher contact densities. As a result, 38999-style connectors offer excellent versatility and flexibility.

Rugged Reliability

When it comes to taming harsh environments, TE Connectivity (TE) offers 38999 connectors to handle a wide range of applications. We offer a broad array of configurations, materials and finishes to help meet the performance requirements of ground, aerospace, and marine applications. These highly durable subminiature circular connectors are time tested for reliability in some of the toughest environments.

TE helps meet the need for reliable performance with rugged MIL-DTL-389999 connectors having 500 mating cycles, operating temperatures to 200°C, corrosion-resistant and corrosion-proof connector versions, scoop-proof designs, and a variety of options for excellent electromagnetic interference (EMI) control, such as filtering and fiber optics.

Designs that Save Space and Weight

The importance of reducing size and weight of components, including MIL-DTL-38999 subminiature connectors, should never be underestimated. Lighter, smaller connectors can make a big difference in terms of contributing to greater performance: longer flight times, greater payload capability, and increased efficiency. Beyond the standard lightweight aluminum connectors, we offer composite connectors to help support greater weight savings.

Solve Tough Application Issues with TE

We work closely with customers to help meet their most demanding requirements for some of the world's toughest applications. Whether for ground defense, commercial and military aerospace, or marine applications, TE designs and manufactures MIL-DTL-38999 subminiature circular connectors to be ruggedly reliable, fast and easy to install, smaller and lighter, and with more options, materials and configurations to help maximize performance, reliability and efficiency.

MIL-DTL-38999 Connector Series Overview

	Series I	Series III	Series IV
Coupling Mechanism	Bayonet, 1/3 turn	Threaded, 360° turn	Breech lock, 1/4 turn
Shell Materials	Aluminum Stainless steel	Aluminum Stainless steel Composite	Aluminum Stainless steel
Finishes	Olive drab cadmium Passivated Electroless nickel Electrodeposited nickel Nickel PTFE Black zinc nickel	Olive drab cadmium Passivated Electroless nickel Electrodeposited nickel Nickel PTFE Black zinc nickel	Olive drab cadmium Passivated Electroless nickel
Shell Sizes	9, 11, 13, 15, 17, 19, 21, 23, 25	9, 11, 13, 15, 17, 19, 21, 23, 25	11, 13, 15, 17, 19, 21, 23, 25
No. of Signal Contacts, Max.	128	187	128
Contact Sizes, Std.	22, 20, 16, 12, 8	23, 22, 20, 16, 12, 10, 8	22, 20, 16, 12, 8
Contact Type	SAE AS39029		
Contact Styles	Crimp PCB tail Solder cup** Eyelet**		
Features	Scoop proof Environmentally sealed Hermetic versions Filter versions Spring fingers for EMI control		
Operating Temperatures	-65°C to +200°C -65°C to +175°C -65°C to +150°C		
Durability (Mating Cycles)	500 ACT composite Series III: 1500*		

*Achievable only with high durability contacts or by replacing them each 500 cycles
** Hermetic versions only

Shell Materials and Finishes

Class	Plating/Finish	Finish Spec	Temperature (Max.)	Salt Spray (Hours)	Series	Shell-to-Shell Conductivity (mV Drop)	RoHS Compliant
Aluminum Shells							
B	Olive Drab Cadmium	QQ-P-416	+175°C	500	I	2.5	No
F	Electroless Nickel	ASTM B733	+200°C	48	I, III, IV	1.0	Yes
G	Electroless Nickel, Space Grade	ASTM B733	+200°C	48	I, III, IV	1.0	Yes
T	Nickel PTFE	QQ-N-290	+175°C	500	I, III, IV	2.5	Yes
W	Olive Drab Cadmium	QQ-P-416	+175°C	500	III, IV	2.5	No
Z	Black Zinc Nickel	ASTM B841	+175°C	500	I, III, IV	2.5	Yes
Stainless Steel Shells							
K	Passivated	—	+260°C	500	III	10	Yes
L	Electrodeposited Nickel	QQ-N-290	+200°C	500	III	1.0	Yes
S	Electrodeposited Nickel	QQ-N-290	+200°C	500	III	1.0	Yes
Composite Shells							
J	Olive Drab Cadmium	ASTM B733	+175°C	2000	III	3.0	No
M	Electroless Nickel	QQ-N-290	+200°C	2000	III	3.0	Yes
Hermetic Connectors (Stainless Steel Shell)							
Y	Passivated	—	+200°C	500	III, IV	10.0	Yes
N	Electrodeposited Nickel	QQ-N-290	+200°C	500	I, III, IV	1.0	Yes
H	Electroless Nickel, Space Grade	QQ-N-290	+200°C	500	III, IV	10.0	Yes

Service Rating

Service Rating	Suggested Operating Voltage		Test Voltage at Altitude (VAC_{rms})			
	VAC_{rms}	VDC	Sea Level	50,000 Ft	70,000 Ft.	100,000 Ft
M	400	550	1300	550	350	200
N	300	450	1000	400	260	200
I	600	850	1800	600	400	200
II	750	1050	2300	800	500	200

Shell Materials

TE 38999 connectors are available with aluminum, stainless steel, and composite shells. In addition, we offer 38999-style connectors in marine bronze.

Aluminum	**Aluminum offers a favorable balance of performance, weight, and cost** Most widely used material Light weight Excellent corrosion resistance Available in all finishes Rugged
Stainless Steel	**Stainless steel is used for hermetic connectors or for connectors used in high-temperature environments, including engines and firewalls** Passivated or nickel finish
Composite	**Composite shells offer the lightest weight and highest corrosion resistance** Weight savings of up to 40% over aluminum and 70% over stainless steel Corrosion proof: passes 2000-hour salt spray test 1500-mating-cycle durability
Marine Bronze	**With excellent corrosion resistance, aluminum nickel bronze is popular for marine applications** Unplated marine bronze helps eliminate the danger of wear to plating that could expose the underlying material to corrosion. See the section on DEUTSCH DTS-B series connectors.

Space-Grade Connectors

Outgassing—the release of gases trapped in a solid—of polymer materials such as connector inserts, seals, adhesives, or potting materials, is an issue since the gases can degrade performance of charge-coupled-device (CCD) sensors in satellites, thermal radiators, or solar cells. Outgassing is a challenge to creating and maintaining clean high-vacuum environments. The closed environment of spacecraft can make outgassing a greater concern. Our space-grade connectors use low-outgassing materials to help meet requirements for a Total Mass Loss of 1.00% or less and a Collected Volatile Condensable Material (CVCM) of 0.10% or less.

Materials can be processed to help meet NASA requirements for low outgassing by oven backout in a thermal vacuum environment.

Aluminum, with an electroless nickel finish, is usually the preferred shell material. Its low magnetic permeability helps prevent it from becoming magnetized.

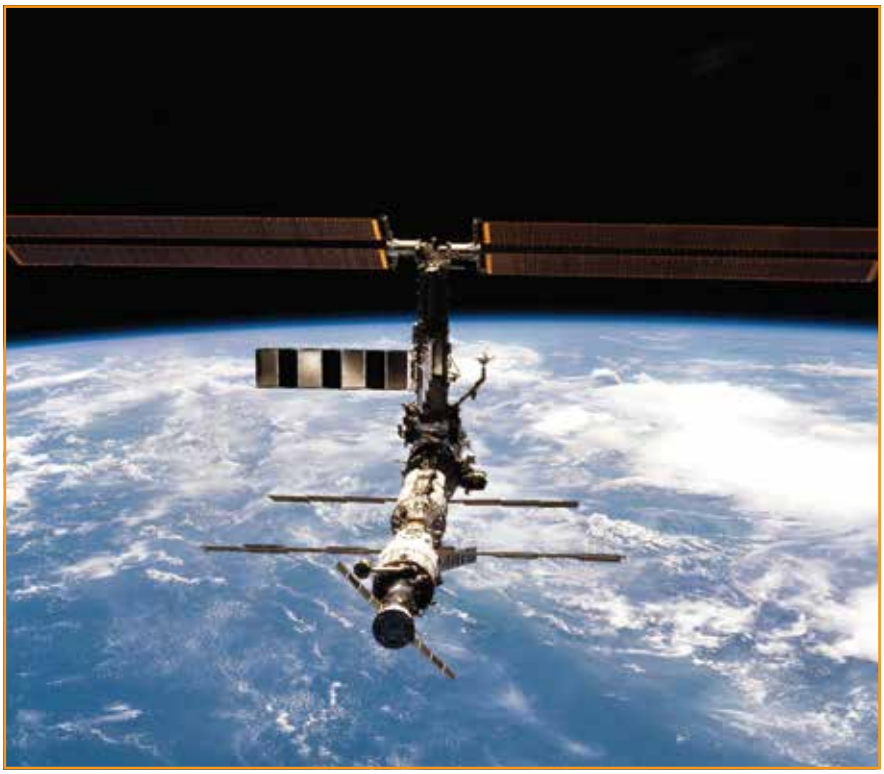

Connector Styles

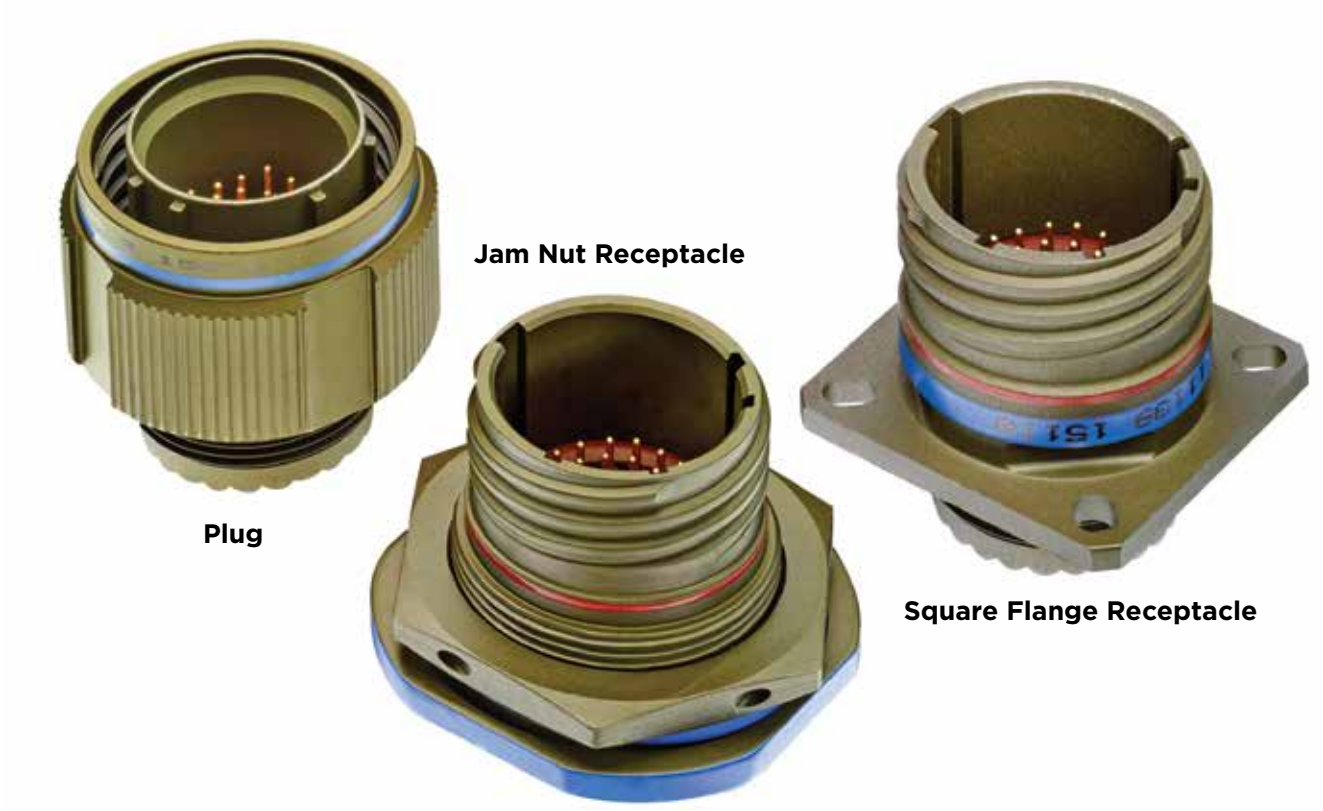

Plug

Plugs are free-hanging cable-mount halves of a connection. They contain the coupling ring used to secure the plug to the receptacle.

Jam Nut Receptacle

Jam nuts are the preferred style for creating an environmentally sealed mounting. Single-hole mounting and an integral o-ring allows a sealed mounting with a single hex nut threaded onto the front of the connector to secure it in place. Jam nut receptacles are rear-mount connectors.

Square Flange Receptacle

These standard receptacles have a relatively large four-hole flange for front or rear mounting to a bulkhead or panel.

Typical Constructions

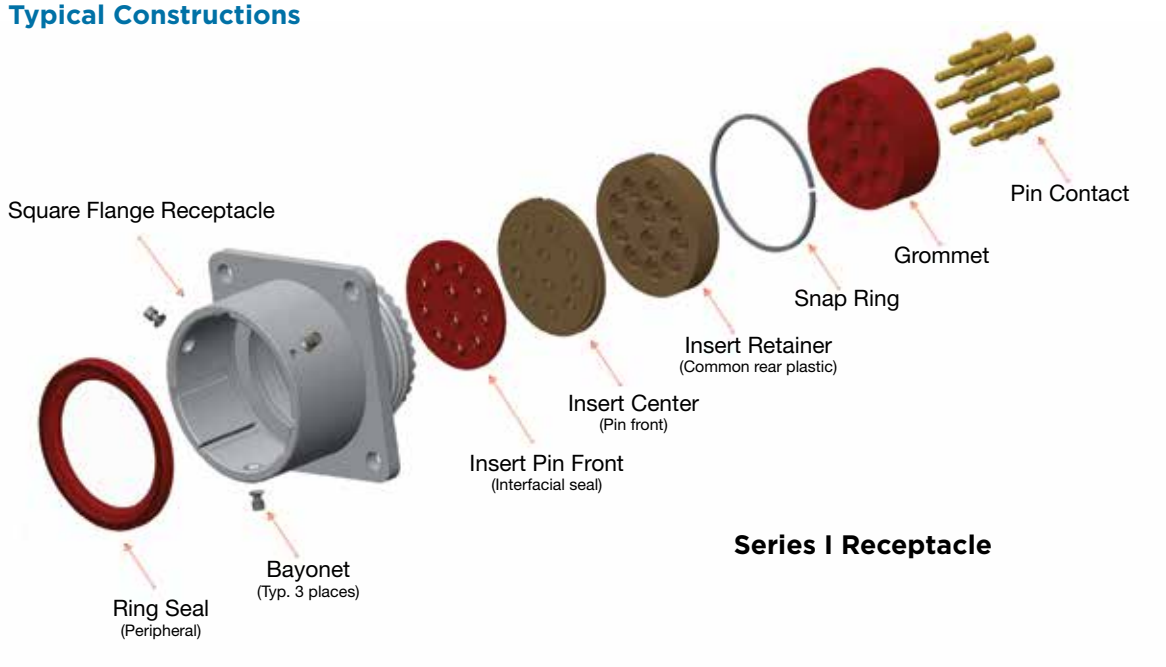

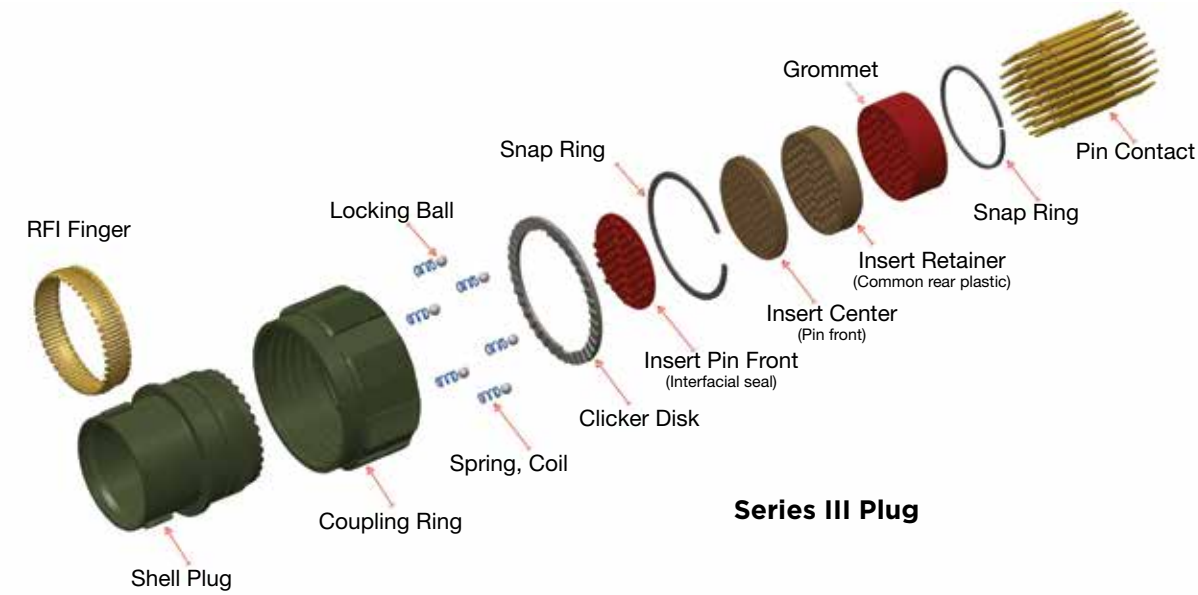

Insert Arrangements

The drawings in this section use numeric shell sizes. MIL-DTL-38999 uses letter in place of shell size in the part number system. Thus, 9-35 and A35 describe the same insert arrangement.

Shell Size	9	11	13	15	17	19	21	23	25
Military Designation	A	B	C	D	E	F	G	H	J

Shell Size 9

Insert	**09-06**	**09-07**	**09-23**	**09-35**
Configuration	7 Size 22M Contacts	7 Size 22D Contacts	9 Size 23 Contacts	6 Size 22D Contacts
Series	I, III	I, III	III	I, III, EN
Service Class	M	M	N	M
QPL	Yes	—	—	Yes
Class K QPL/S	—	—	—	Yes
Hermetic	Yes	—	—	Yes

Insert	**09-98**
Configuration	3 Size 20 Contacts
Series	I, III, EN
Service Class	I
QPL	Yes
Class K QPL/S	Yes
Hermetic	Yes

Shell Size 11

Insert	**11-01**	**11-02**	**11-04**	**11-05**
Configuration	1 Size 8 Contact	2 Size 16 Contacts	4 Size 20 Contacts	5 Size 20 Contacts
Series	III, EN	I, III, IV	I, III, IV, EN	I, III, IV, EN
Service Class	N	I	I	I
QPL	—	Yes (Series I, III)	Yes	Yes
Class K QPL/S	—	—	—	—
Hermetic	—	Yes	Yes	Yes

Insert	**11-12**	**11-13**	**11-23**	**11-35**
Configuration	1 Size 12 Contact	13 Size 22M Contacts	19 Size 23 Contacts	13 Size 22D Contacts
Series	III, EN	I, III, IV	III	I, III, IV, EN
Service Class	II	M	N	M
QPL	—	Yes	—	Yes
Class K QPL/S	—	—	—	Yes
Hermetic	—	Yes	—	Yes

Insert	**11-98**	**11-99**
Configuration	6 Size 20 Contacts	7 Size 20 Contacts
Series	I, III, IV, EN	I, III, IV, EN
Service Class	I	I
QPL	Yes	Yes
Class K QPL/S	Yes	Yes
Hermetic	Yes	Yes

Shell Size 13

Insert	**13-04**	**13-08**	**13-22***	**13-23**
Configuration	4 Size 16 Contacts	8 Size 20 Contacts	22 Size 22M Contacts	32 Size 23 Contacts
Series	I, III, IV, EN	I, III, IV, EN	I, III, IV	I, III, IV
Service Class	I	I	M	N
QPL	Yes	Yes	Yes	—
Class K QPL/S	—	Yes	—	—
Hermetic	Yes	Yes	Yes	—

Insert	**13-35**	**13-98**
Configuration	22 Size 22D Contacts	10 Size 20 Contacts
Series	I, III, IV, EN	I, III, IV, EN
Service Class	M	I
QPL	Yes	Yes
Class K QPL/S	Yes	Yes
Hermetic	Yes	Yes

*Inactive for new designs

Shell Size 15

	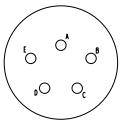	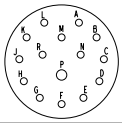	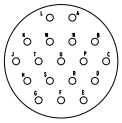	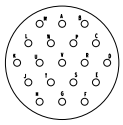
Insert	**15-05**	**15-15**	**15-18**	**15-19**
Configuration	5 Size 16 Contacts	14 Size 20 Contacts	18 Size 20 Contacts	19 Size 20 Contacts
Series	I, III, IV, EN	I, III, IV, EN	I, III, IV, EN	I, III, IV, EN
Service Class	II	I	I	I
QPL	Yes	Yes	Yes	Yes
Class K QPL/S	Yes	—	Yes	Yes
Hermetic	Yes	Yes	Yes	Yes

	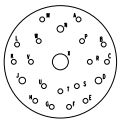	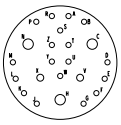	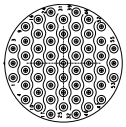	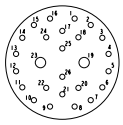
Insert	**15-21**	**15A23**	**15-23**	**15-26**
Configuration	1 Size 12 Coax Contact 3 Size 20 Contacts 17 Size 22D Contacts	4 Size 16 Coax Contacts 3 Size 20 Contacts 19 Size 22D Contacts	55 Size 23 Contacts	2 Size 16 Contacts 24 Size 22D Contacts
Series	I, III, IV	III	III	I, III, IV
Service Class	I	N	N	M
QPL		—	—	—
Class K QPL/S	—	—	—	—
Hermetic	—	—	—	—

	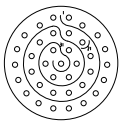	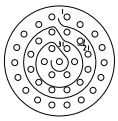	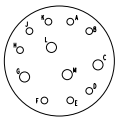
Insert	**15-35**	**15-37**	**15-97**
Configuration	37 Size 22D Contacts	37 Size 22M Contacts	4 Size 12 Contacts 8 Size 20 Contacts
Series	I, III, IV, EN	I, III, IV	I, III, IV, EN
Service Class	M	M	I
QPL	Yes	Yes	Yes
Class K QPL/S	Yes	—	Yes
Hermetic	Yes	Yes	Yes

Shell Size 17

	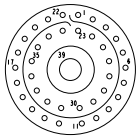	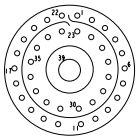	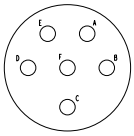	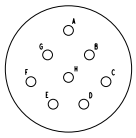
Insert	**17-02***	**17-03**	**17-06**	**17-08**
Configuration	1 Size 8 Twinax Contact 38 Size 22D Contacts	1 Size 8 Twinax 38 Size 22D Contacts	6 Size 12 Contacts	8 Size 16 Contacts
Series	I, III, IV, EN	I, III, IV	I, III, IV, EN	I, III, IV, EN
Service Class	M	M	I	II
QPL		—	Yes	Yes
Class K QPL/S	—	—	Yes	Yes
Hermetic	—	—	Yes	Yes

	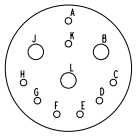	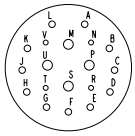	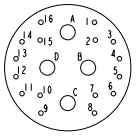	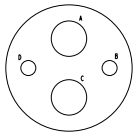
Insert	**17-11**	**17-19**	**17-20**	**17-22**
Configuration	2 Size 12 Twinax 1 Size 12 Coax 8 Size 20 Contacts	4 Size 16 Contacts 11 Size 20 Contacts 4 Size 22D Contacts	4 Size 12 Contacts 16 Size 22D Contacts	2 Size 8 Twinax 2 Size 10 Contacts
Series	I, III, IV	I, III, IV	I, III, IV, EN	I, III, IV, EN
Service Class	N	N	N	N
QPL	—	—	—	—
Class K QPL/S	—	—	—	—
Hermetic	—	—	—	—

	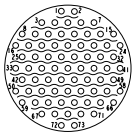	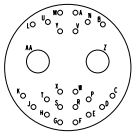	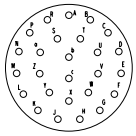	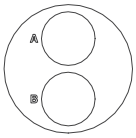
Insert	**17-23**	**17-24**	**17-26**	**17-28**
Configuration	73 Size 23 Contacts	2 Size 8 Power 2 Size 12 Contacts	26 Size 20 Contacts	2 Size 8 Twinax
Series	III	I, III, IV	I, III, IV, EN	I, III, IV, EN
Service Class	N	N	I	Twinax
QPL	—	—	Yes	Yes
Class K QPL/S	—	—	Yes	—
Hermetic	—	—	Yes	—

	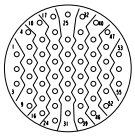	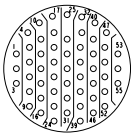	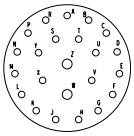
Insert	**17-35**	**17-55**	**17-99**
Configuration	55 Size 22D Contacts	55 Size 22M Contacts	2 Size 16 Contacts 21 Size 20 Contacts
Series	I, III, IV, EN	I, III, IV	I, III, IV, EN
Service Class	M	M	I
QPL	Yes	Yes	Yes
Class K QPL/S	Yes	—	No
Hermetic	Yes	Yes	Yes

*Inactive for new designs

Shell Size 19

	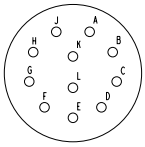	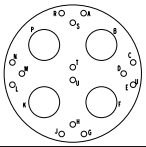	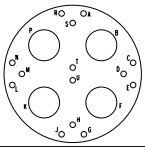	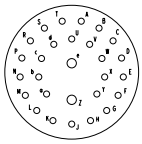
Insert	**19-11**	**19-18***	**19-19**	**19-28**
Configuration	11 Size 16 Contacts	4 Size 8 Twinax 14 Size 20 Contacts	4 Size 8 Twinax 14 Size 20 Contacts	2 Size 16 Contacts 26 Size 20 Contacts
Series	I, III, IV, EN	I, III, IV	I, III, IV	I, III, IV
Service Class	II	M	M	I
QPL	Yes	—	—	—
Class K QPL/S	Yes	—	—	—
Hermetic	Yes	—	—	Yes

	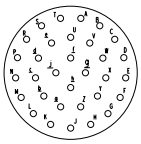	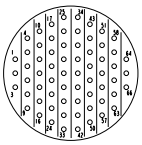	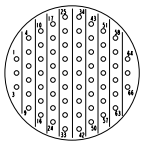
Insert	**19-32**	**19-35**	**19-66***
Configuration	32 Size 20 Contacts	66 Size 22D Contacts	66 Size 22M Contacts
Series	I, III, IV, EN	I, III, IV, EN	I, III, IV
Service Class	I	M	M
QPL	Yes	Yes	Yes
Class K QPL/S	Yes	Yes	—
Hermetic	Yes	Yes	Yes

*Inactive for new designs

Shell Size 21

	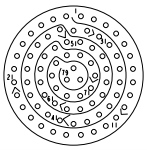	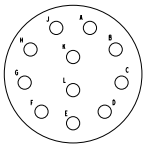	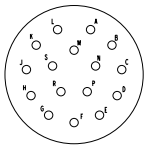	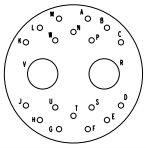
Insert	**21-01***	**21-11**	**21-16**	**21-20**
Configuration	79 Size 22M Contacts	11 Size 12 Contacts	16 Size 16 Contacts	2 Size 8 Twinax 18 Size 20 Contacts
Series	I, III, IV	I, III, IV, EN	I, III, IV, EN	I, III, IV, EN
Service Class	I	I	II	M
QPL	Yes	Yes	Yes	—
Class K QPL/S	—	—	Yes	—
Hermetic	Yes	Yes	—	—
			Yes	—

	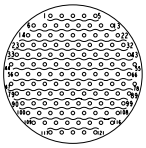	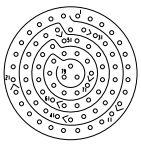	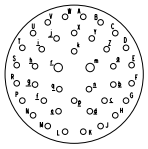	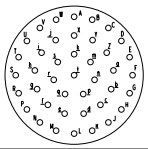
Insert	**21-23**	**21-35**	**21-39**	**21-41**
Configuration	121 Size 23 Contacts	79 Size 22D Contacts	2 Size 16 Contacts 37 Size 20 Contacts	41 Size 20 Contacts
Series	I, III	I, III, IV, EN	I, III, IV, EN	I, III, IV, EN
Service Class	N	M	I	I
QPL	—	Yes	Yes	Yes
Class K QPL/S	—	Yes	Yes	Yes
Hermetic	—	Yes	Yes	Yes

	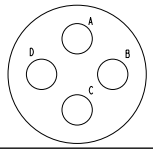	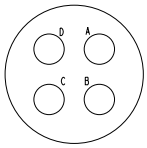	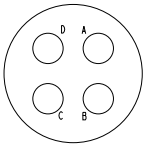
Insert	**21-48**	**21-75***	**21-76**
Configuration	4 Size 8 Power	4 Size 8 Twinax	4 Size 8 Twinax
Series	I, III, IV	I, III, IV, EN	I, III, IV
Service Class	—	Twinax	Twinax
QPL	—	Yes	—
Class K QPL/S	—	—	—
Hermetic		—	—

*Inactive for new designs

Shell Size 23

	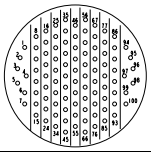	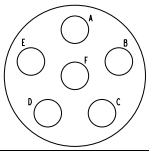	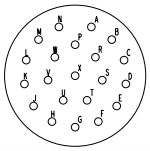	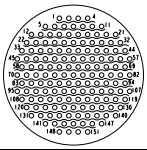
Insert	**23-01***	**23-06**	**23-21**	**23-23**
Configuration	100 Size 22M Contacts	6 Size 8 Twinax	21 Size 16 Contacts	151 Size 23 Contacts
Series	I, III, IV	I, III, IV, EN	I, III, IV, EN	III
Service Class	M	M	II	N
QPL	Yes	—	Yes	—
Class K QPL/S	—	—	—	—
Hermetic	Yes	Yes	Yes	—

	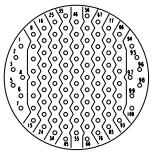	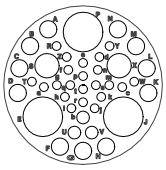	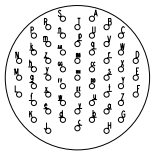	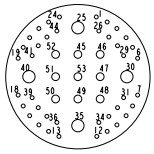
Insert	**23-35**	**23-41**	**23-53**	**23-54**
Configuration	100 Size 22D Contacts	3 Size 8 Contacts 3 Size 12 Contacts 11 Size 16 Contacts 3 Size 20 Contacts 22 Size 22D Contacts	53 Size 20 Contacts	4 Size 12 Contacts 9 Size 16 Contacts 40 Size 22D Contacts
Series	I, III, IV, EN	III, EN	I, III, IV, EN	I, III, IV, EN
Service Class	M	N	I	M
QPL	Yes	—	Yes	—
Class K QPL/S	—	—	Yes	—
Hermetic	Yes	—	Yes	—

	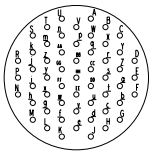	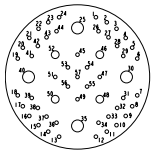
Insert	**23-55**	**23-63**
Configuration	55 Size 20 Contacts	4 Size 12 Contacts 4 Size 16 Contacts 49 Size 22D Contacts
Series	I, III, IV, EN	I, III, IV
Service Class	I	M
QPL	Yes	—
Class K QPL/S	—	—
Hermetic	Yes	—

*Inactive for new designs

Shell Size 25

	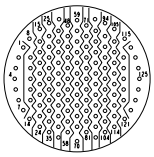	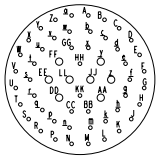	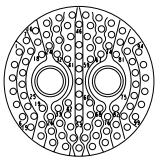	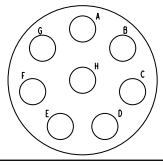
Insert Configuration	**25-01*** 128 Size 22D Contacts	**25-04** 8 Size 16 Contacts 48 Size 20 Contacts	**25-07*** 2 Size 8 Twinax 97 Size 22D Contacts	**25-08*** 8 Size 8 Twinax
Series	I, III, IV	I, III, IV, EN	I, III, IV, EN	I, III, IV, EN
Service Class	M	I	M	Twinax
QPL	Yes	Yes	—	—
Class K QPL/S	—	Yes	—	—
Hermetic	Yes	Yes	—	—

	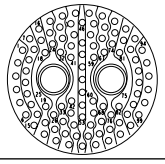	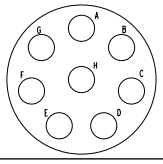	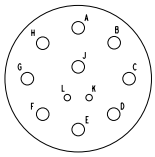	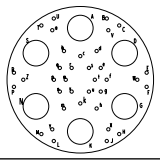
Insert Configuration	**25-09** 2 Size 8 Twinax 97 Size 22D Contacts	**25-10** 8 Size 8 Twinax	**25-11** 9 Size 10 Contacts 2 Size 20 Contacts	**25-17** 6 Size 8 Twinax 36 Size 22D Contacts
Series	I, III, IV	I, III, IV	I, III, IV, EN	I, III, IV, EN
Service Class	M	Twinax	N	N
QPL	—	—	—	—
Class K QPL/S	—	—	—	—
Hermetic	—	—	—	—

	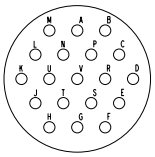	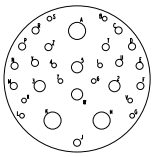	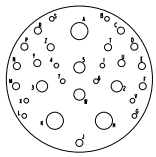	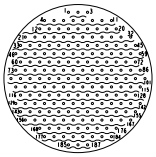
Insert Configuration	**25-19** 19 Size 12 Contacts	**25-20** 3 Size 8 Twinax 4 Size 12 Coax 13 Size 16 Contacts 10 Size 20 Contacts	**25-21** 3 Size 8 Twinax 4 Size 12 Coax 13 Size 16 Contacts 10 Size 20 Contacts	**25-23** 187 Size 22D Contacts
Series	I, III, IV, EN	I, III, IV, EN	I, III, IV	I, III, IV
Service Class	I	N	N	N
QPL	Yes	Yes	Yes	—
Class K QPL/S	—	—	—	—
Hermetic	Yes	—	—	—

*Inactive for new designs

Shell Size 25

	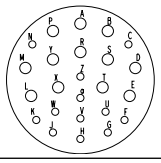	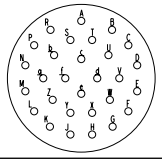	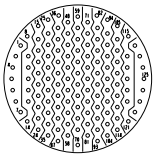	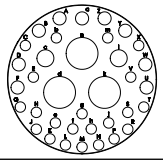
Insert Configuration	**25-24** 12 Size 12 Contacts 12 Size 16 Contacts	**25-29** 29 Size 16 Contacts	**25-35** 128 Size 22D Contacts	**25-36** 3 Size 8 Contacts 1 Size 12 Coax 1 Size 12 Contact 10 Size 16 Contacts 24 Size 20 Contacts
Series	I, III, IV, EN	I, III, IV, EN	I, III, IV, EN	III, EN
Service Class	I	I	M	N
QPL	Yes	Yes	Yes	—
Class K QPL/S	—	—	Yes	—
Hermetic	Yes	Yes	Yes	—

	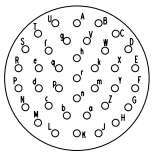	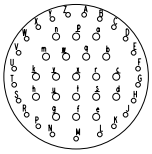	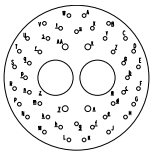	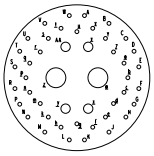
Insert Configuration	**25-37** 37 Size 16 Contacts	**25-43** 20 Size 16 Contacts 23 Size 20 Contacts	**25-46*** 2 Size 8 Coax 4 Size 12 Contacts 40 Size 20 Contacts	**25-47** 2 Size 8 Coax 4 Size 12 Contacts 40 Size 20 Contacts
Series	I, III, IV, EN	I, III, IV, EN	I, III, IV, EN	I, III, IV
Service Class	II	I	I	I
QPL	Yes	Yes	Yes	—
Class K QPL/S	—	—	—	—
Hermetic	—	Yes	—	—

	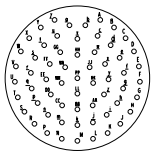	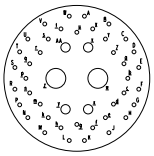	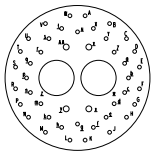
Insert Configuration	**25-61** 61 Size 20 Contacts	**25-90*** 2 Size 8 Twinax 4 Size 16 Contacts 40 Size 20 Contacts	**25-91** 2 Size 8 Twinax 4 Size 16 Contacts 40 Size 20 Contacts
Series	I, III, IV, EN	I, III, IV	I, III, IV
Service Class	I	I	I
QPL	Yes	—	—
Class K QPL/S	Yes	—	—
Hermetic	Yes	—	—

*Inactive for new designs

RUGGED

- Self-locking bayonet coupling system
- 100% scoop proof
- 500-mating-cycle durability
- Excellent shock and vibration resistance
- Environmentally sealed and hermetic versions available

VERSATILE

- Available in 9 shell sizes
- Intermateable and interchangeable with all other MIL-DTL-38999 Series I connectors
- Available in a variety of shell materials and finishes
- Wide range of backshells and accessories

EMI PROTECTED

- Grounding fingers for excellent EMI protection
- Connector is grounded when the shells meet, even before the contacts are engaged
- Metal-to-metal bottoming to help maximize EMI grounding protection
- EMI shielding effective up to 10 GHz

MIL-DTL-38999 Series I Connectors

DEUTSCH DJT Series Connectors

The DEUTSCH DJT Series connectors from TE Connectivity (TE) are high-performance MIL-DTL-38999 Series I subminiature circular connectors offering a scoop-proof design for easy, reliable mating.

Available in 9 shell sizes and environmentally sealed and hermetic versions, DEUTSCH DJT Series connectors feature a self-locking bayonet coupling system. They are completely intermateable and interchangeable with MIL-DTL-38999 Series I connectors, and are available in a variety of shell materials and finishes.

Designed for rugged reliability, DEUTSCH DJT Series connectors are highly durable, capable of 500 mating cycles. They provide excellent vibration, corrosion and shock resistance, and offer excellent EMI protection and shielding effectiveness from 100 MHz to 10 GHz.

MIL-DTL-38999 Series I Connectors

DEUTSCH DJT Series Connectors

Specifications

MATERIALS

- **Shell Material and Plating:**
  Aluminum, olive drab cadmium
  Aluminum, electroless nickel
  Carbon steel, electrodeposited nickel (hermetic only)
  Stainless steel, passivated (hermetic only but can be available commercially for standard environment configurations)
- **Insert:** Thermoplastic and fluorinated silicone elastomer
- **EMI Spring Fingers:** Nickel or cadmium-plated beryllium copper
- **O-Ring:** Fluorinated silicone elastomer

ENVIRONMENTAL

- **Temperature Range:**
  -65°C to +150°C Electrodeposited tin-plated carbon steel (Class D)
  -65°C to +175°C – Cadmium finish (Class B)
  -65°C to +200°C – Nickel finish (Class F) and stainless steel (Class E)
- **Fluid Resistance:** Fluid immersion per EIA 364.10, including resistance to
  MIL-PRF-5606: Hydraulic fluid
  MIL-DTL-83133: JP-8 aviation fuel
  MIL-PRF-7808: Lubricating oil
  MIL-PRF-23699: Lubricating oil
  MIL-A-8243: Deicing/defrosting fluid
  MIL-C-25769: Aircraft cleaning compound
  MIL-PRF-87937: Aircraft cleaning compound
  MIL-G-3056: Gasoline
- **Salt Spray:** 48 hours (Nickel finishes)
  500 hours (Cadmium, black zinc nickel, nickel PTFE, and passivated finishes)
- **Thermal Cycling:** -65° to 150/175/200°C (max. temperature is class dependent)

MECHANICAL

- **Sine Vibration:** Up to 60 g for 36 hr.
- **Random Vibration:** Up to 41.7 g for 16 hr. at 175° C
  Up to 50 g for 16 hr. at ambient temperature
- **Shock:** 300 g, 3 ms in the 3 axes
- **Durability:** 500 mating cycles
- **Contact Retention:**
  Size 22D: 44 N (10 lb.)
  Size 20: 67 N (15 lb.)
  Size 16: 111 N (25 lb.)
  Size 12: 111 N (25 lb.)
  Size 10: 111 N (25 lb.)
  Size 8: 111 N (25 lb.)

ELECTRICAL

- **Shell-to-Shell Conductivity:** 1.0 mV (nickel finish)
  2.5 mV (cadmium finish)
  10.0 mV (passivated finish)
- **Shielding Effectiveness:** >90 dB at 100 MHz, >65 dB through 10 GHz

MIL-DTL-38999 Series I Connectors

DEUTSCH DJT Series Connectors

Voltage Rating

Service Rating	Suggested Operating Voltage		Test Voltage at Altitude (VAC_{rms})			
	VAC_{rms}	VDC	Sea Level	50,000 Ft.	70,000 Ft.	100,000 Ft.
M	400	550	1300	550	350	200
N	300	450	1000	400	260	200
I	600	850	1800	600	400	200
II	750	1050	2300	800	500	200

Hermetic Connectors

- **Hermetic Seal:** Sintered glass
- **Leakage:** ≤16 cm^3/hr. (0.97 in^3/hr.) on mated pairs connected under 2.1 bar (4.38 psi)
- **Thermal Shock:** 10 cycles, 4°C max. to 90°C min.

Current Rating

Contact Size	Test Current (A)	Voltage Drop (mV)
22D	5	73
20	7.5	55
16	13	50
12	23	42
10	33	34
8*	46	26

*When commercial power contact replaces twin-ax contact

Thread Sizes

Shell Size	Accessory Thread (Class 2A)	Jam Nut Thread (Class 2A)
9	.4375-28 UNEF	.6875-24 UNEF
11	.5625-24 UNEF	.8125-20 UNEF
13	.6875-24 UNEF	1.0000-20 UNEF
15	.8125-20 UNEF	1.1250-18 UNEF
17	.9375-20 UNEF	1.2500-18 UNEF
19	1.0625-18 UNEF	1.3750-18 UNEF
21	1.1875-18 UNEF	1.5000-18 UNEF
23	1.3125-18 UNEF	1.6250-18 UNEF
25	1.4375-18 UNEF	1.7500-18 UNS

MIL-DTL-38999 Series I Connectors

Military Part Numbering System

MS27466 T 25 F 35 S D xxxx

MIL SPEC NUMBER/SHELL STYLE

MS27466 Front, Wall Mount Receptacle (DJT10)
MS27467 Straight Plug with EMI Fingers (DJT16)
MS27468 Jam Nut Receptacle (DJT14)
MS27470 Jam Nut Hermetic Receptacle (DJT14)
MS27471 Solder Mount Hermetic Receptacle (DJT11)
MS27496 Front, Box Mount Receptacle (DJT13)
MS27505 Rear, Box Mount Receptacle (DJT12)
MS27656 Rear, Wall Mount Receptacle (DJT19)

CLASS

T With Accessory Thread (MS27466, MS27467, M27468, M27656)
E Same As **T**, But Not Approved For New Designs (E-Nut Not Included)
E No Accessory Thread, Box Mount (M27496, M27505)
G Space-Grade Environment Resisting
Y Hermetically Sealed

SHELL SIZE

9, 11, 13, 15, 17, 19, 21, 23, 25

MODIFICATIONS

L/C Less Contacts

POLARIZING POSITIONS

N Normal (omit from part number)
A, B, C, D (B and C not available in shell size 9)

CONTACTS

P 500-Cycle Pin
S 500-Cycle Socket
H 1500-Cycle Pin
J 1500-Cycle Socket
A Less Pin (with intent to use nonstandard contacts)
B Less Socket (with intent to use nonstandard contacts)

Hermetic Contacts

P Pin, Solder Cup
S Socket, Solder Cup
X Pin, Eyelet
Z Socket, Eyelet
C Pin, PC Tail
D Socket, PC Tail

INSERT ARRANGEMENT

See Insert Arrangement Tables, pages 10-17 and 22-23

FINISH

B Olive Drab Cadmium
F Nickel
G Space Grade
D Carbon Steel, Electrodeposited Tin Plating
E Stainless Steel, Passivated

DEUTSCH Part Numbering System

DJT 1 0 F 25 - 35 S D xxxx

GENERAL IDENTIFIER

DJT DEUTSCH MIL-DTL-38999 Series I

COUPLING SYSTEM

1 Bayonet

SHELL STYLE

0 Front, Wall Mount Receptacle (M27466)
6 Straight Plug with EMI Fingers (M27467)
4 Jam Nut Receptacle (M27468)
4 Jam Nut Hermetic Receptacle (MS27470)
1 Solder Mount Hermetic Receptacle (MS27471)
3 Front, Box Mount Receptacle (M27496)
2 Rear, Box Mount Receptacle (M27505)
9 Rear, Wall Mount Receptacle (M27656)

CLASS

E Olive Drab Cadmium
F Nickel
G Space Grade
H Hermetic
Z Black Zinc Nickel

MODIFICATIONS

6149 Less Contacts

POLARIZING POSITIONS

N Normal
A, B, C, D (B and C not available in shell size 9)

CONTACTS

P 500-Cycle Pin
S 500-Cycle Socket
H 1500-Cycle Pin
J 1500-Cycle Socket
A Less Pin (with intent to use nonstandard contacts)
B Less Socket (with intent to use nonstandard contacts)

Hermetic Contacts

P Pin, Solder Cup
S Socket, Solder Cup
X Pin, Eyelet
Z Socket, Eyelet
C Pin, PC Tail
D Socket, PC Tail

INSERT ARRANGEMENT

See Insert Arrangement Tables, pages 10-17 and 22-23

SHELL SIZE

09, 11, 13, 15, 17, 19, 21, 23, 25

MIL-DTL-38999 Series I Connectors

DEUTSCH DJT Series Connectors

Insert	Contact Size/Quantity													
DJT and Military	8 Twinax	8 Coax	8 Power	12 Twinax	12 Coax	10	12	16	20	22D	QPL	QPL Hermetic	Uses 38999/62-8* Boots	Inactive: Superseded by
09-07										7				
09-35										6	✔	✔		
09-98									3		✔	✔		
11-02								2			✔	✔		
11-04									4			✔		
11-05									5		✔			
11-35										13	✔	✔		
11-98									6		✔	✔		
11-99									7		✔	✔		
13-04								4			✔	✔		
13-08									8		✔	✔		
13-35										22	✔	✔		
13-98									10		✔	✔		
15-05								5			✔	✔		
15-15								1	14			✔		
15-18									18			✔		
15-19									19		✔	✔		
15-26								2		24				
15-35										37	✔	✔		
15-97								4	8		✔	✔		
17-02	1									38				17-03
17-03	1									38			✔	
17-06							6				✔			
17-08								8			✔			
17-11				2	1				8					
17-19								4	11	4				
17-20							4			16				
17-22	2						2							
17-24			2							22				
17-26									26		✔			
17-35										55	✔			
17-99								2	21		✔			
19-11								11			✔			
19-18	4									14				19-19
19-19	4									14			✔	
19-28								2	26					
19-32									32		✔			

Blue shaded entries are not Mil Spec.

MIL-DTL-38999 Series I Connectors

DEUTSCH DJT Series Connectors

Insert	Contact Size/Quantity													
DJT and Military	8 Twinax	8 Coax	8 Power	12 Twinax	12 Coax	10	12	16	20	22D	QPL	QPL Hermetic	Uses 38999/62-8* Boots	Inactive: Superseded by
19-35										66	✔			
21-11							11				✔			
21-16								16			✔			
21-20	2								18					
21-35										79	✔			
21-39								2	37		✔			
21-41									41		✔			
21-48			4											
21-75	4													21-76
21-76	4												✔	
23-06	6													
23-21								21			✔			
23-35										100	✔			
23-53									53		✔			
23-54							4	9		40				
23-55									55		✔			
23-63							4	4		49				
25-04								8	48		✔	✔		
25-07	2									97				25-09
25-08	8													25-10
25-09	2									97			✔	
25-10	8												✔	
25-17	6									36				
25-19							19				✔	✔		
25-20	3				4			13	10					25-21
25-21	3				4			13	10				✔	
25-24							12	12			✔	✔		
25-29								29			✔	✔		
25-35										128	✔	✔		
25-37								37			✔	✔		
25-43								20	23		✔	✔		
25-46		2						4	40					25-47
25-47		2						4	40				✔	
25-61									61		✔	✔		
25-90	2							4	40					25-91
25-91	2							4	40				✔	

Blue shaded entries are not Mil Spec.

MIL-DTL-38999 Series I Connectors

DEUTSCH DJT Series Connectors

Front Panel Mount Square Flange Receptacle

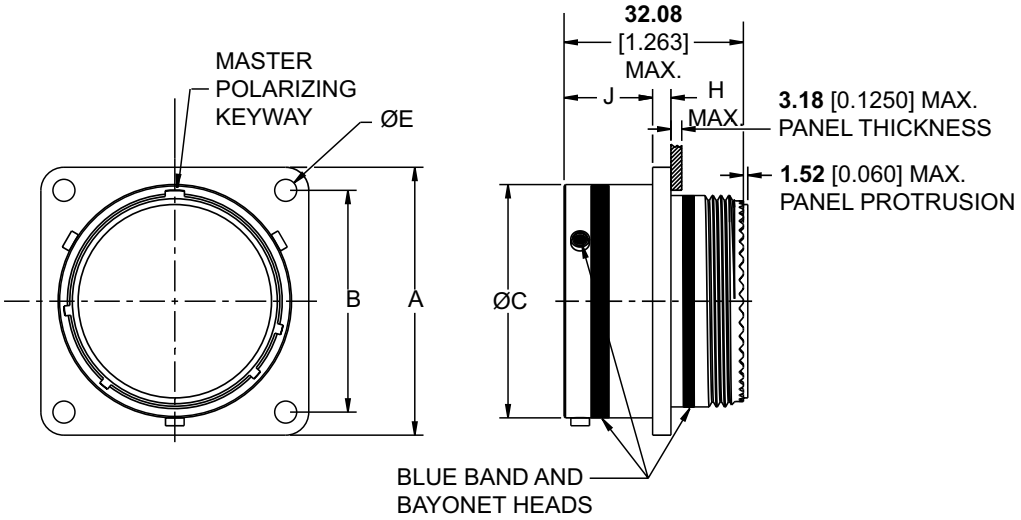

Shell Size	A ±0.51 (0.020)	B ±0.13 (0.005)	C ±0.08 (0.003)	E +0.25 ± 0.25/-0.13 (+0.010/-0.005)	F	G ±0.13 (0.005)	H	J +0.00 / -0.13 (0.005)
09	**23.83** 0.938	**18.26** 0.719	**14.48** 0.570	**3.25** 0.128	**13.11** 0.516	**3.25** 0.128	**2.54** 0.100	**16.05** 0.623
11	**26.19** 1.031	**20.62** 0.812	**17.73** 0.698	**3.25** 0.128	**16.87** 0.664	**3.25** 0.128	**2.54** 0.100	**16.05** 0.623
13	**28.58** 1.125	**23.01** 0.906	**21.54** 0.848	**3.25** 0.128	**19.05** 0.750	**3.25** 0.128	**2.54** 0.100	**16.05** 0.623
15	**30.96** 1.219	**24.61** 0.969	**24.71** 0.973	**3.25** 0.128	**23.01** 0.906	**3.25** 0.128	**2.54** 0.100	**16.05** 0.623
17	**33.32** 1.312	**26.97** 1.062	**27.89** 1.098	**3.25** 0.128	**25.81** 1.016	**3.25** 0.128	**2.54** 0.100	**16.05** 0.623
19	**36.53** 1.438	**29.36** 1.156	**30.61** 1.205	**3.25** 0.128	**28.98** 1.141	**3.25** 0.128	**2.54** 0.100	**16.05** 0.623
21	**39.67** 1.562	**31.75** 1.250	**33.78** 1.330	**3.25** 0.128	**32.16** 1.266	**3.25** 0.128	**3.30** 0.130	**15.29** 0.602
23	**42.88** 1.688	**34.93** 1.375	**36.96** 1.455	**3.73** 0.147	**34.98** 1.377	**3.91** 0.154	**3.30** 0.130	**15.29** 0.602
25	**46.02** 1.812	**38.10** 1.500	**40.13** 1.580	**3.73** 0.147	**37.69** 1.484	**3.91** 0.154	**3.30** 0.130	**15.29** 0.602

Millimeters Inches

MIL-DTL-38999 Series I Connectors

DEUTSCH DJT Series Connectors

Jam Nut Receptacle

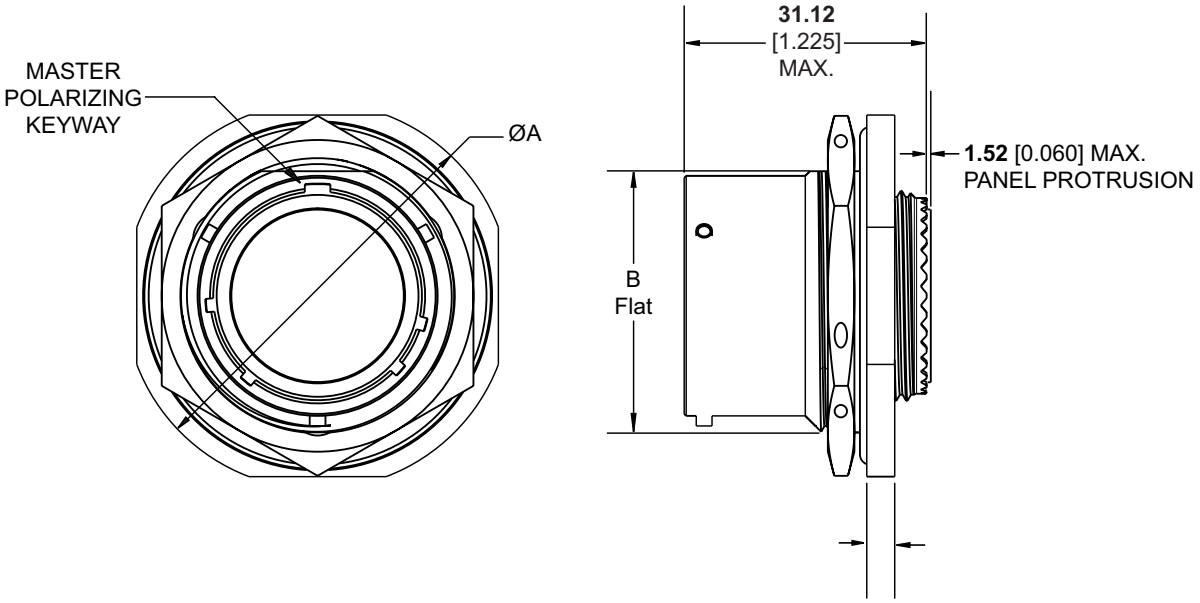

Shell Size	ØA ±0.41 (0.016)	B Flat +.000 / -0.25 (0.010)	F +.000 / -0.25 (0.010)	ØG +.000 / -0.25 (0.010)
09	**30.18** 1.188	**16.64** 0.655	**17.02** 0.670	**17.78** 0.700
11	**34.93** 1.375	**19.18** 0.755	**19.58** 0.771	**20.96** 0.825
13	**38.10** 1.500	**23.93** 0.942	**24.26** 0.955	**25.65** 1.010
15	**41.28** 1.625	**27.08** 1.066	**27.56** 1.085	**28.83** 1.135
17	**44.45** 1.750	**30.25** 1.191	**30.73** 1.210	**32.00** 1.260
19	**49.23** 1.938	**33.43** 1.316	**33.91** 1.335	**35.18** 1.385
21	**52.37** 2.062	**36.60** 1.441	**37.08** 1.460	**38.35** 1.510
23	**55.58** 2.188	**39.78** 1.566	**40.26** 1.585	**41.53** 1.635
25	**58.72** 2.312	**42.95** 1.691	**43.43** 1.710	**44.70** 1.760

Millimeters Inches

MIL-DTL-38999 Series I Connectors

DEUTSCH DJT Series Connectors

Rear Panel Wall Mount Square Flange Receptacle

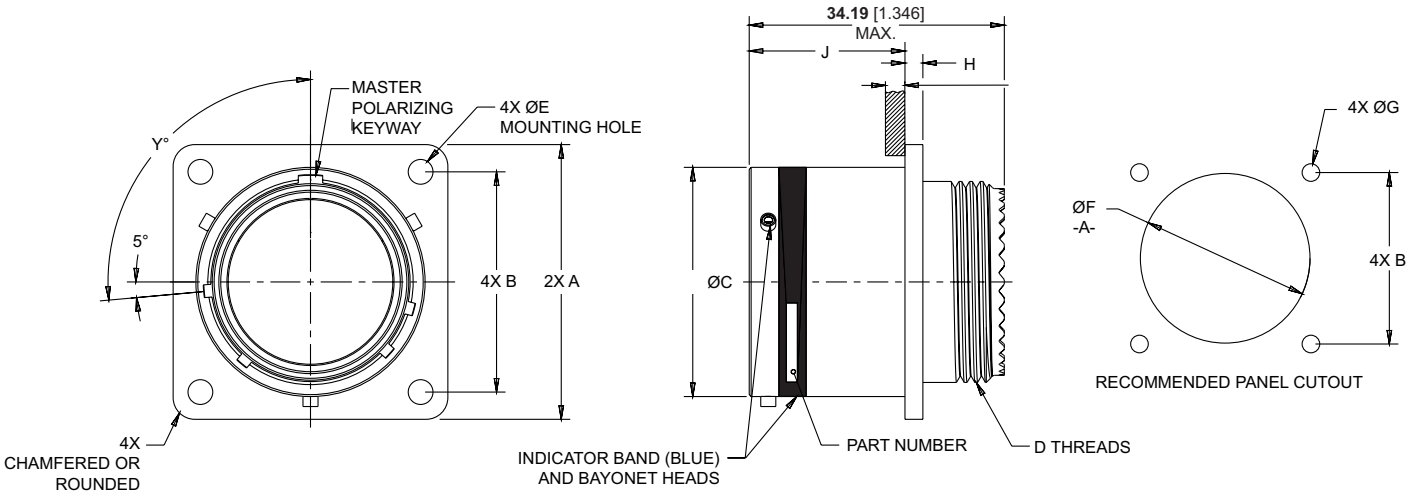

Shell Size	A ±0.51 (0.020)	B ±0.13 (0.005)	C ±0.08 (0.003)	D THREAD UNEF-2A	ØE +0.25 -0.13 (+.010 -.005)	ØF Min.	ØG ±0.13 (0.005)	H +0.38 -0.00 (+.015 -.000)	J +0.00 -0.13 (+.000 -.005)
09	**23.83** 0.938	**18.26** 0.719	**14.48** 0.570	**11.11-28** 0.4375-28	**3.25** 0.128	**13.11** 0.516	**3.25** 0.128	**2.16** 0.085	**20.83** 0.820
11	**26.19** 1.031	**20.62** 0.812	**17.73** 0.698	**14.29-24** 0.5625-24	**3.25** 0.128	**16.87** 0.664	**3.25** 0.128	**2.16** 0.085	**20.83** 0.820
13	**28.58** 1.125	**23.01** 0.906	**21.54** 0.848	**17.46-24** 0.6875-24	**3.25** 0.128	**19.05** 0.750	**3.25** 0.128	**2.16** 0.085	**20.83** 0.820
15	**30.96** 1.219	**24.61** 0.969	**24.71** 0.973	**20.64-20** 0.8125-20	**3.25** 0.128	**23.01** 0.906	**3.25** 0.128	**2.16** 0.085	**20.83** 0.820
17	**33.32** 1.312	**26.97** 1.062	**27.89** 1.098	**23.81-20** 0.9375-20	**3.25** 0.128	**25.81** 1.016	**3.25** 0.128	**2.16** 0.085	**20.83** 0.820
19	**36.53** 1.438	**29.36** 1.156	**30.61** 1.205	**26.99-18** 1.0625-18	**3.25** 0.128	**28.98** 1.141	**3.25** 0.128	**2.16** 0.085	**20.83** 0.820
21	**39.67** 1.562	**31.75** 1.250	**33.78** 1.330	**30.16-18** 1.1875-18	**3.25** 0.128	**32.16** 1.266	**3.25** 0.128	**2.92** 0.115	**20.07** 0.790
23	**42.88** 1.688	**34.93** 1.375	**36.96** 1.455	**33.34-18** 1.3125-18	**3.73** 0.147	**34.98** 1.377	**3.91** 0.154	**2.92** 0.115	**20.07** 0.790
25	**46.02** 1.812	**38.10** 1.500	**40.13** 1.580	**36.51-18** 1.4375-18	**3.73** 0.147	**37.69** 1.484	**3.81** 0.150	**2.92** 0.115	**20.07** 0.790

Millimeters Inches

MIL-DTL-38999 Series I Connectors

DEUTSCH DJT Series Connectors

Plug
Type MS27467 / DEUTSCH DJT16

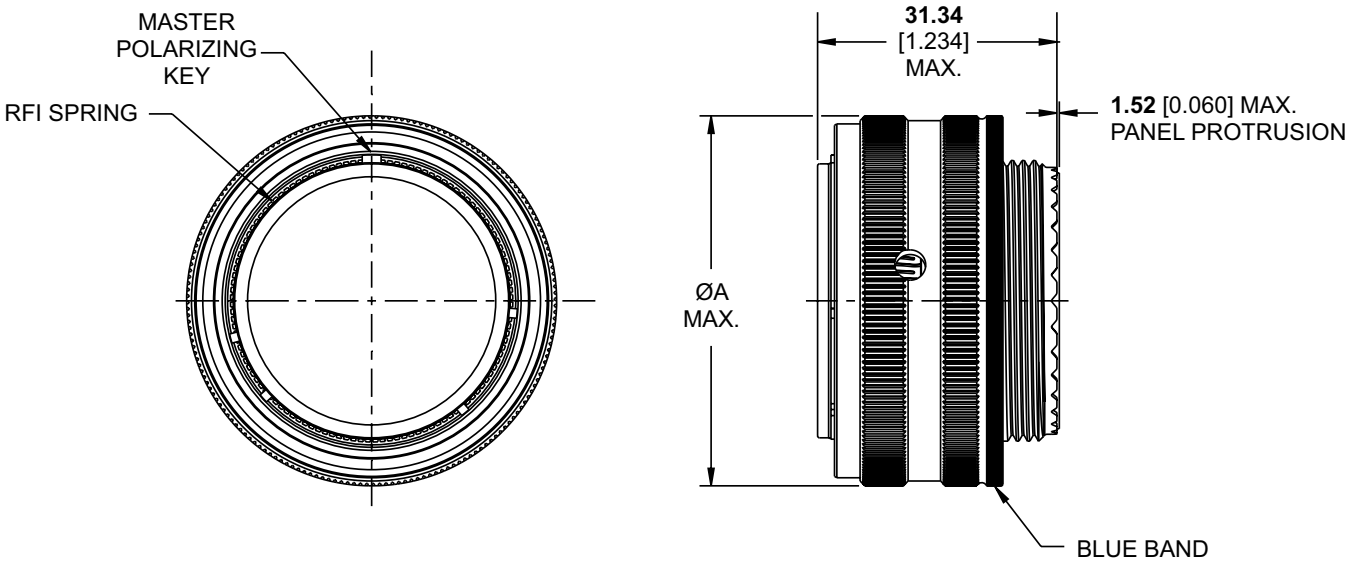

Shell Size	A
09	**21.82** .859
11	**24.99** .984
13	**29.36** 1.156
15	**32.54** 1.281
17	**35.71** 1.406
19	**38.51** 1.516
21	**41.68** 1.641
23	**44.86** 1.766
25	**48.03** 1.891

Millimeters Inches

MIL-DTL-38999 Series I Connectors

DEUTSCH DJT Series Connectors

Recommended Panel Cutouts

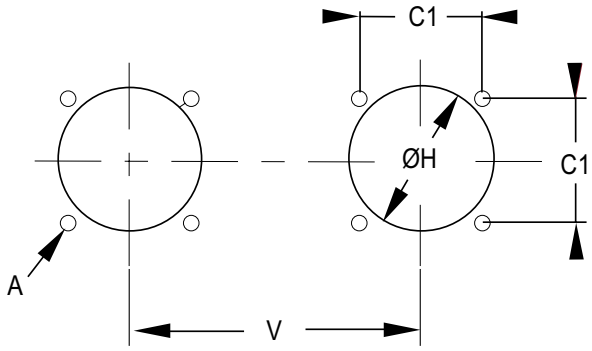

Square Flange Receptacle

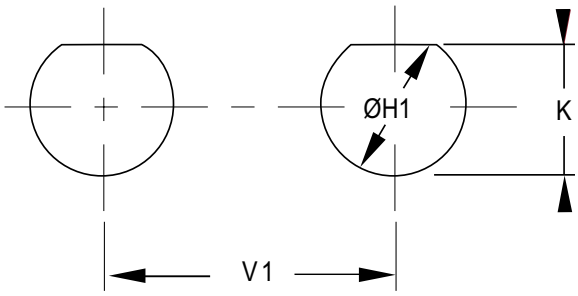

Jam Nut Receptacle

Shell Size	C1 ±0.13 (0.005)	H Min.	A ±0.13 (0.005)	V Min.
09	**18.26** 0.719	**13.11** 0.516	**3.25** 0.128	**25.58** 1.007
11	**20.62** 0.812	**16.87** 0.664	**3.25** 0.128	**27.00** 1.063
13	**23.01** 0.906	**19.05** 0.750	**3.25** 0.128	**30.20** 1.189
15	**24.61** 0.969	**23.01** 0.906	**3.25** 0.128	**33.30** 1.331
17	**26.97** 1.062	**25.81** 1.016	**3.25** 0.128	**36.50** 1.437
19	**29.36** 1.156	**28.98** 1.141	**3.25** 0.128	**39.30** 1.547
21	**31.75** 1.250	**32.16** 1.266	**3.25** 0.128	**42.50** 1.673
23	**34.93** 1.375	**34.98** 1.377	**3.91** 0.154	**45.70** 1.799
25	**38.10** 1.500	**37.69** 1.484	**3.91** 0.154	**48.80** 1.921

Millimeters Inches

Shell Size	K +.000 / -0.25 (0.010)	ØH1 +.000 / -0.25 (0.010)	V1 Min.
09	**17.02** 0.670	**17.78** 0.700	**20.20** 1.189
11	**19.58** 0.771	**20.96** 0.825	**32.60** 1.283
13	**24.26** 0.955	**25.65** 1.010	**36.00** 1.417
15	**27.56** 1.085	**28.83** 1.135	**39.60** 1.559
17	**30.73** 1.210	**32.00** 1.260	**43.30** 1.705
19	**33.91** 1.335	**35.18** 1.385	**47.00** 1.850
21	**37.08** 1.460	**38.35** 1.510	**50.60** 1.992
23	**40.26** 1.585	**41.53** 1.635	**54.20** 2.134
25	**43.43** 1.710	**44.70** 1.760	**59.70** 2.350

Millimeters Inches

MIL-DTL-38999 Series I Connectors

DEUTSCH DJT Series Connectors

Keying Options

(Viewed from Mating Face of the Receptacle Connector)

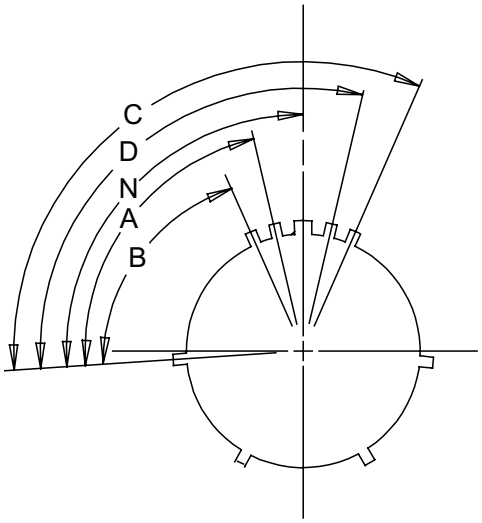

Shell Size	Key Position (Degrees)				
	N	A	B	C	D
09	95	77	—	—	113
11	95	81	67	123	109
13	95	75	63	127	115
15	95	74	61	129	116
17	95	77	65	125	113
19	95	77	65	125	113
21	95	77	65	125	113
23	95	80	69	121	110
25	95	80	69	121	110

Degrees in table above are the distance between Datum E (that bisects first minor keyway) and the center line of the master keyway

RELIABLE

- Self-locking threaded coupling
- 100% scoop proof
- Contact retention system provides excellent contact retention under severe vibration

EMI PROTECTED

- Grounding fingers for excellent EMI protection
- Metal-to-metal bottoming for maximum EMI grounding protection
- Connector is grounded when the shells meet, even before the contacts are engaged
- Trapezoidal thread for excellent shell-to-shell continuity

VERSATILE

- Variety of shell materials and finishes
- Wide range of backshells and accessories

MIL-DTL-38999 Series III Connectors

DEUTSCH DTS Series Aluminum Connectors
DEUTSCH DTS-K, DTS-L and DTS-S Series Stainless Steel Connectors
DEUTSCH ACT Series Composite Connectors

DEUTSCH MIL-DTL-38999 Series subminiature circular connectors offer a scoop-proof design for easy, reliable mating and a threaded coupling for excellent vibration resistance. They are available in three families distinguished by shell materials.

DTS Series: Lightweight aluminum shells for environmentally sealed versions and stainless steel for hermetic versions.

DTS-K and DTS-S Series: Stainless steel shells meeting the requirements of Classes K and S, suitable for firewall and high-temperature applications such as engines.

ACT Series: Composite shells, offering the lightest weight and highest resistance to corrosion.

Inserts are available in nine shell sizes, with contact arrangements meeting MIL-DTL-1560, along with additional arrangements, to help maximize flexibility in circuit configurations.

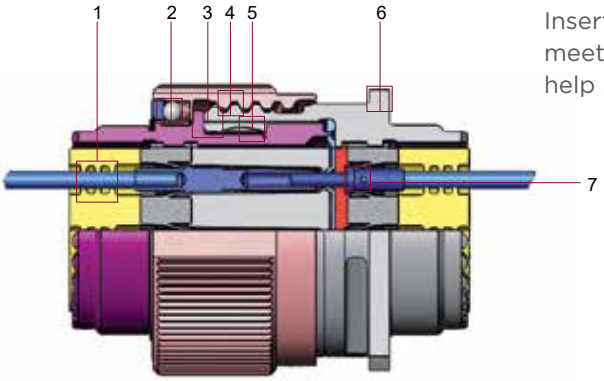

Designed to Perform

1 High-quality silicone seals to help maximize tear resistance and sealing memory

2 Self-locking threaded coupling

3 100% metal-to-metal bottoming for excellent EMI grounding protection

4 Triple-start threads

5 Grounding fingers providing excellent EMI protection

6 Elongated mounting holes for flexible mounting with standard MIL-DTL-38999 box or wall mount receptacles

7 Contact retention system provides excellent contact retention under severe vibration

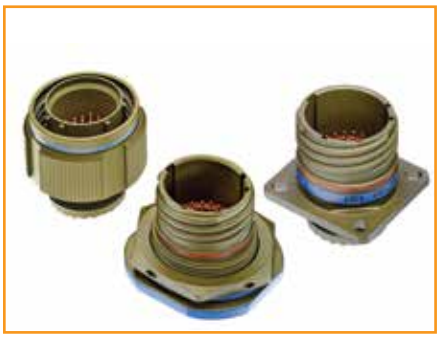

MIL-DTL-38999 Series III Connectors

DEUTSCH DTS and ACT Series Connectors

Specifications

MATERIALS

- **Shell:** Aluminum, composite, stainless steel, marine bronze
- **Plating:** Olive drab cadmium, passivated, electroless or electrodeposited nickel, nickel PTFE, black zinc nickel
- **Insert:** Thermoplastic and fluorinated silicone elastomer
- **EMI Spring Fingers:** Nickel or cadmium-plated beryllium copper
- **O-Ring:** Fluorinated silicone elastomer

ENVIRONMENTAL

- **Temperature Range:**
  -65°C to +200°C
- **Fluid Resistance:** Fluid immersion per EIA 364.10, including resistance to
  MIL-PRF-5606: Hydraulic fluid
  MIL-DTL-83133: JP-8 aviation fuel
  MIL-PRF-7808: Lubricating oil
  MIL-PRF-23699: Lubricating oil
  MIL-A-8243: Deicing/defrosting fluid
  MIL-C-25769: Aircraft cleaning compound
  MIL-PRF-87937: Aircraft cleaning compound
  MIL-G-3056: Gasoline
- **Salt Spray:** 48 hours (Nickel finishes)
  500 hours (Cadmium, black zinc nickel, nickel PTFE, and passivated finishes)
  2000 hours (Composite classes M and J)
- **Thermal Cycling:** -65° to 150/175/200°C (max. temperature is class dependent)

MECHANICAL

- **Sine Vibration:** Up to 60 g for 36 hr.
- **Random Vibration:** Up to 41.7 g for 16 hr. at 175° C
  Up to 50 g for 16 hr. at ambient temperature
- **Shock:** 300 g, 3 ms in the 3 axes
- **Durability:** 500 mating cycles (1500 cycles for composite connectors)
- **Contact Retention:**
  Size 23: 44 N (10 lb.)
  Size 22D: 44 N (10 lb.)
  Size 20: 67 N (15 lb.)
  Size 16: 111 N (25 lb.)
  Size 12: 111 N (25 lb.)
  Size 10: 111 N (25 lb.)
  Size 8: 111 N (25 lb.)

ELECTRICAL

- **Shell-to-Shell Conductivity:**
  1.0 mV (nickel finish)
  2.5 mV (cadmium finish)
  3 mV (passivated finish)
- **Shielding Effectiveness:** >90 dB at 100 MHz, >65 dB through 10 GHz

MIL-DTL-38999 Series III Connectors

DEUTSCH DTS and ACT Series Connectors

Voltage Rating

Service Rating	Suggested Operating Voltage		Test Voltage at Altitude (VAC_{rms})			
	VAC_{rms}	VDC	Sea Level	50,000 Ft.	70,000 Ft.	100,000 Ft.
M	400	550	1300	550	350	200
N	300	450	1000	400	260	200
I	600	850	1800	600	400	200
II	750	1050	2300	800	500	200

Hermetic Connectors

- **Hermetic Seal:** Sintered glass
- **Leakage:** ≤16 cm^3/hr. (0.97 in^3/hr.) on mated pairs connected under 2.1 bar (4.38 psi)
- **Thermal Shock:** 10 cycles, 4°C max. to 90°C min.

Current Rating

Contact Size	Test Current (A)	Voltage Drop (mV)
23	3	73
22D	5	73
20	7.5	55
16	13	50
12	23	42
10	33	34
8*	46	26

*When commercial power contact replaces twin-ax contact

Thread Sizes

Shell Size	Accessory Thread (6g 0.100R)	Mating Thread (0.1P-0.3L)	Jam Nut Thread (6g 0.100R)
9	M12 x 1.0	.6250	M17 x 1.0
11	M15 x 1.0	.7500	M20 x 1.0
13	M18 x 1.0	.8750	M25 x 1.0
15	M22 x 1.0	1.0000	M28 x 1.0
17	M25 x 1.0	1.1875	M32 x 1.0
19	M28 x 1.0	1.2500	M35 x 1.0
21	M31 x 1.0	1.3750	M38 x 1.0
23	M34 x 1.0	1.5000	M41 x 1.0
25	M37 x 1.0	1.6250	M44 x 1.0

MIL-DTL-38999 Series III Connectors

DEUTSCH DTS and ACT Series Connectors

Part Numbering MIL-DTL-38999 and DEUTSCH Commerical Versions

		Commercial Composite	ACT	26	M	D	35	P	N	-6149
		Commercial Al/SS	DTS	26	F	15 -	35	P	N	-6149
		Military	D38999	/26	F	D	35	P	N	-L/C

Commercial Composite	Commercial Alum./ Stainless	Military	Description
RANGE			
ACT	**DTS**	**D38999**	
STYLE			
20	**20**	**/20**	Square Flange Receptacle
24	**24**	**/24**	Jam Nut Receptacle
26	**26**	**/26**	Straight Plug
—	**13**	**—**	Box Mount Receptacle
—	**20**	**/21**	Hermetic Square Flange Receptacle
—	**24**	**/23**	Hermetic Jam Nut Receptacle
—	**21**	**/25**	Hermetic Solder Flange
—	**23**	**/27**	Hermetic Weld Flange
CLASS			
ALUMINUM SHELL			
—	**F**	**F**	Electroless Nickel Plated (48-hr. Salt Spray)
—	**G**	**G**	Space-Grade Electroless Nickel (48-hr. Salt Spray)
—	**T**	**T**	Nickel PTFE (500-hr. Salt Spray)
—	**W**	**W**	Olive Drab Cadmium (500-hr. Salt Spray)
—	**Z**	**Z**	Black Zinc Nickel (500-hr. Salt Spray)
COMPOSITE SHELL			
M	**—**	**M**	Electroless Nickel Plated (2000-hr. Salt Spray)
J	**—**	**J**	Olive Drab Cadmium (2000-hr. Salt Spray)
STAINLESS STEEL SHELL			
—	**K**	**K**	Passivated S.S., Firewall (500-hr. Salt Spray)
—	**S**	**S**	Electrodeposited Nickel S.S., Firewall (500-hr. Salt Spray)
—	**L**	**L**	Electrodeposited Nickel (48-hr. Salt Spray)
HERMETIC			
—	**Y**	**Y**	Stainless Steel, Passivated
—	**N**	**N**	Stainless Steel, Electrodeposited Nickel Plated
—	**H**	**H**	Space Grade
SHELL SIZES			
9 (A), 11 (B), 13 (C), 15 (D), 17 (E), 19 (F), 21 (G), 23 (H), 25 (J)			Numbers = DTS Commercial; (Letters) = Military/ACT Commercial
INSERT ARRANGEMENTS			
			See Insert Arrangement Tables, pages 10-17 and 35-36
CONTACTS			
P Pin,	**H** 1500-Cycle Pin		
S Socket,	**J** 1500-Cycle Socket		
A Less Pin (with intent to use nonstandard contacts)			
B Less Socket (with intent to use nonstandard contacts)			
CONTACTS FOR HERMETIC CONNECTORS			
P Pin, Solder Cup,	**S** Socket, Solder Cup		
C PC Tail Pin,	**D** PC Tail Socket		
X Eyelet Pin,	**Z** Eyelet Socket		
KEYING			
N, A, B, C, D, E, U			N = Normal, U = Universal
MODIFICATION CODE			
6149	**6149**	**L/C**	Less Contacts

MIL-DTL-38999 Series III Connectors

DEUTSCH DTS and ACT Series Connectors

Part Numbering
EN3645 and DEUTSCH Commercial Versions

EN3645 F 0 D N 35 M N

RANGE
EN3645

FINISH
METAL SHELLS
F Nickel
K Passivated
W Olive Drab Cadmium
COMPOSITE SHELLS
J Olive Drab Cadmium
M Nickel

SHELL TYPE
0 Square Flange Receptacle
7 Jam Nut Receptacle
6 Straight Plug

SHELL SIZE
A, B, C, D, E, F, G, H, J

CAVITY TYPE
N Normal (Standard)
G Grounded (Signal Contact Bodies Grounded to Shell)
R Reinforced (For Power Contacts)
L Polarized (Keyed for Quadrax or Twinax Contacts)
Q Polarized and Grounded
Note: L and Q are, respectively, legacy to N and G

INSERT ARRANGEMENT
See Insert Arrangement Tables, page 10

CONTACT TYPE
M Pin
F Socket
A Less Pin
B Less Socket

KEYING POSITIONS
N (Normal)
A, B, C, D, E

MIL-DTL-38999 Series III Connectors

DEUTSCH DTS and ACT Series Connectors

Insert		Contact Size/Quantity													
DTS Commercial	Military (Commercial ACT)	8 Twinax	8 Coax	8 Power	12 Twinax	12 Coax	10	12	16	20	22D	23	Includes K Class	Uses 38999/62-8* Boots	Inactive: Superseded by
09-07	A7 (A07)										7				
09-23	A23											9			
09-35	A35										6		✔		
09-98	A98									3			✔		
11-02	B2 (B02)								2						
11-04	B4 (B04)									4					
11-05	B5 (B05)									5					
11-23	B23											19			
11-35	B35										13		✔		
11-98	B98									6			✔		
11-99	B99									7			✔		
13-04	C4 (C04)								4						
13-08	C8 (C08)									8			✔		
13-23	C23											32			
13-35	C35										22		✔		
13-98	C98									10			✔		
15-05	D5 (D05)								5				✔		
15-15	D15								1	14					
15-18	D18									18			✔		
15-19	D19									19			✔		
15-23	D23											55			
15-26	D26								2		24				
15-35	D35										37		✔		
15-97	D97								4	8			✔		
17-02	E2 (E02)	1									38				17-03
17-03	E3 (E03)	1									38			✔	
17-06	E6 (E06)							6					✔		
17-08	E8 (E08)								8				✔		
17-11	E11				2	1				8					
17-19	E19								4	11	4				
17-20	E20							4			16				
17-22	E22	2						2							
17-23	E23											73			
17-24	E24			2							22				
17-26	E26									26			✔		
17-35	E35										55		✔		
17-99	E99								2	21			✔		
19-11	F11								11				✔		
19-18	F18	4									14				19-19
19-19	F19	4									14			✔	
19-23	E23											88			
19-28	F28								2	26					

Blue shaded entries are not Mil Spec. Green shading indicates high-density inserts.

MIL-DTL-38999 Series III Connectors

DEUTSCH DTS and ACT Series Connectors

Insert		Contact Size/Quantity													
DTS Commercial	Military (Commercial ACT)	8 Twinax	8 Coax	8 Power	12 Twinax	12 Coax	10	12	16	20	22D	23	Includes K Class	Uses 38999/62-8* Boots	Inactive: Superseded by
19-32	F32									32			✔		
19-35	F35										66		✔		
21-11	G11							11							
21-16	G16								16						
21-20	G20	2								18					
21-23	G23											121			
21-35	G35										79		✔		
21-39	G39								2	37			✔		
21-41	G41									41			✔		
21-48	G48			4											
21-75	G75	4													21-76
21-76	G76	4												✔	
23-06	H6 (H06)	6													
23-21	H21								21						
23-23	H23											151			
23-35	H35										100				
23-53	H53									53			✔		
23-54	H54							4	9		40				
23-55	H55									55					
23-63	H63							4	4		49				
25-04	J4 (J04)								8	48			✔		
25-07	J7 (J07)	2									97				25-09
25-08	J8 (J08)	8													25-10
25-09	J9 (J09)	2									97			✔	
25-10	J10	8												✔	
25-11	J11						9			2					
25-17	J17	6									36				
25-19	J19							19							
25-20	J20	3				4			13	10					25-21
25-21	J21	3				4			13	10				✔	
25-23	J23											187			
25-24	J24							12	12						
25-29	J29								29						
25-35	J35										128		✔		
25-37	J37								37						
25-43	J43								20	23					
25-46	J46		2						4	40					25-47
25-47	J47		2						4	40				✔	
25-61	J61									61			✔		
25-90	J90	2							4	40					25-91
25-91	J91	2							4	40				✔	

Blue shaded entries are not Mil Spec.
Green shading indicates high-density inserts.

MIL-DTL-38999 Series III Connectors

DEUTSCH DTS and ACT Series Connectors

Square Flange Receptacle Type 20

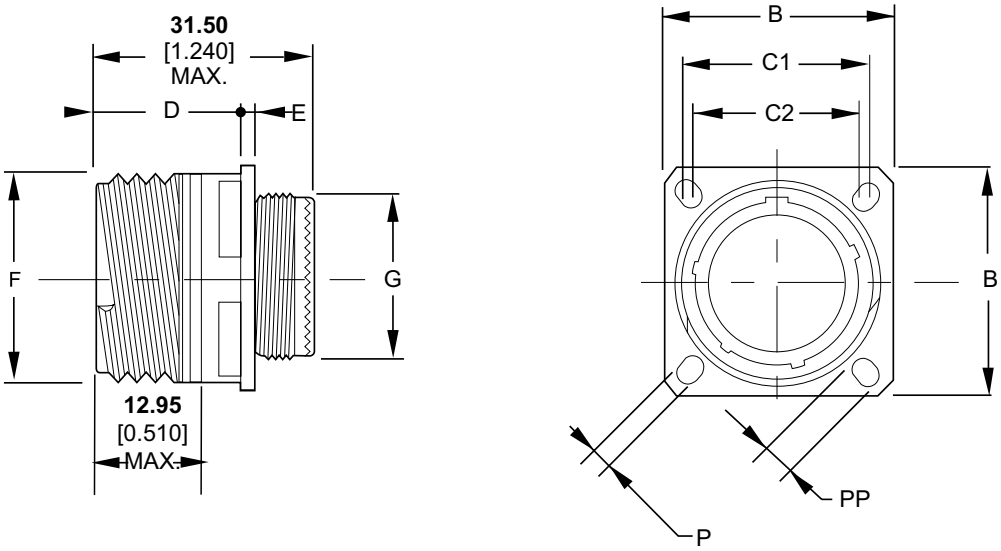

Shell Size	B	C1	C2	D Max.	E Max.	F	G	P	PP	Mass (g) by Shell Type		
										Al	SS	Composite
09	**23.80** 0.937	**18.26** 0.719	**15.09** 0.594	**20.90** 0.823	**2.50** 0.098	**15.75** 0.620	**11.90** 0.469	**3.25** 0.128	**5.49** 0.216	10	27	9
11	**26.20** 1.031	**20.62** 0.812	**18.26** 0.719	**20.90** 0.823	**2.50** 0.098	**18.90** 0.744	**14.90** 0.587	**3.25** 0.128	**4.93** 0.194	16	36	11
13	**28.60** 1.126	**23.01** 0.906	**20.62** 0.812	**20.90** 0.823	**2.50** 0.098	**22.10** 0.870	**17.90** 0.705	**3.25** 0.128	**4.93** 0.194	19	45	14
15	**31.00** 1.220	**24.61** 0.969	**23.01** 0.906	**20.90** 0.823	**2.50** 0.098	**25.25** 0.994	**21.90** 0.862	**3.25** 0.128	**4.93** 0.194	25	56	18
17	**33.30** 1.311	**26.97** 1.062	**24.61** 0.969	**20.90** 0.823	**2.50** 0.098	**29.95** 1.179	**24.90** 0.980	**3.25** 0.128	**4.93** 0.194	32	74	23
19	**36.50** 1.437	**29.36** 1.156	**26.97** 1.062	**20.90** 0.823	**2.50** 0.098	**31.55** 1.242	**27.90** 1.098	**3.25** 0.128	**4.93** 0.194	39	78	26
21	**39.70** 1.563	**31.75** 1.250	**29.36** 1.156	**20.10** 0.791	**3.20** 0.126	**34.70** 1.366	**30.90** 1.217	**3.25** 0.128	**4.93** 0.194	45	95	31
23	**42.90** 1.689	**34.93** 1.375	**31.75** 1.250	**20.10** 0.791	**3.20** 0.126	**37.90** 1.492	**33.90** 1.335	**3.91** 0.154	**6.15** 0.242	54	108	36
25	**46.00** 1.811	**38.10** 1.500	**34.93** 1.375	**20.10** 0.791	**3.20** 0.126	**41.10** 1.618	**36.90** 1.453	**3.91** 0.154	**6.15** 0.242	59	120	43

Millimeters Inches

MIL-DTL-38999 Series III Connectors

DEUTSCH DTS and ACT Series Connectors

Jam Nut Receptacle
Type 24

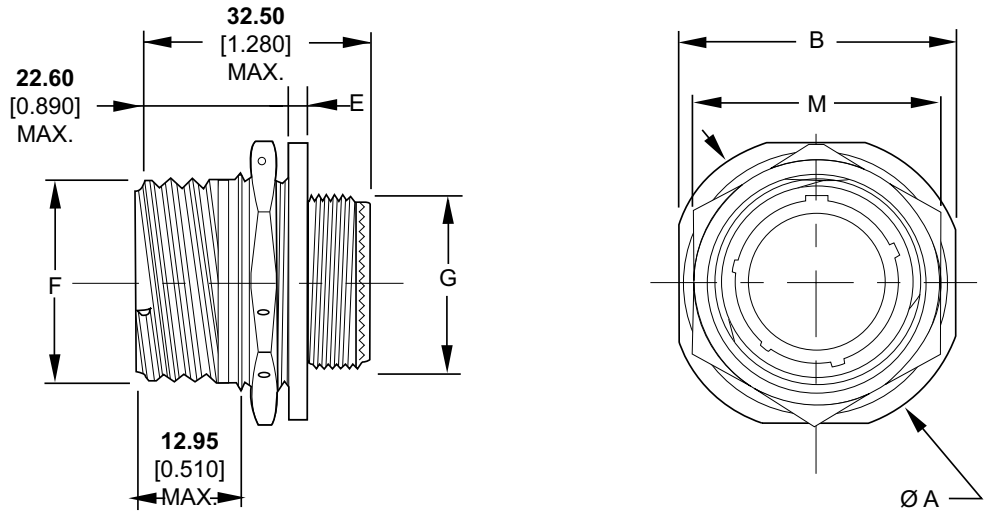

Shell Size	A	B	E	F	G	M Max.	Mass (g) by Shell Type		
							Al	SS	Composite
09	**30.20** 1.189	**27.00** 1.063	**2.20** 0.087	**15.75** 0.620	**11.90** 0.469	**24.00** 0.945	15	40	11
11	**34.90** 1.374	**31.80** 1.252	**2.20** 0.087	**18.90** 0.744	**14.90** 0.587	**27.00** 1.063	21	50	14
13	**38.10** 1.500	**34.90** 1.374	**2.20** 0.087	**22.10** 0.870	**17.90** 0.705	**32.00** 1.260	27	60	18
15	**41.30** 1.626	**38.10** 1.500	**2.20** 0.087	**25.25** 0.994	**21.90** 0.862	**36.00** 1.417	32	72	23
17	**44.50** 1.752	**41.30** 1.626	**2.20** 0.087	**29.95** 1.179	**24.90** 0.980	**37.00** 1.457	40	92	29
19	**49.20** 1.937	**46.00** 1.811	**3.00** 0.118	**31.55** 1.242	**27.90** 1.098	**41.00** 1.614	49	96	35
21	**52.40** 2.063	**49.20** 1.937	**3.00** 0.118	**34.70** 1.366	**30.90** 1.217	**46.00** 1.811	54	114	38
23	**55.60** 2.189	**52.40** 2.063	**3.00** 0.118	**37.90** 1.492	**33.90** 1.335	**50.00** 1.969	65	130	46
25	**58.70** 2.311	**55.60** 2.189	**3.00** 0.118	**41.10** 1.618	**36.90** 1.453	**51.23** 2.017	73	143	55

Millimeters Inches

MIL-DTL-38999 Series III Connectors

DEUTSCH DTS and ACT Series Connectors

Plug
Type 26

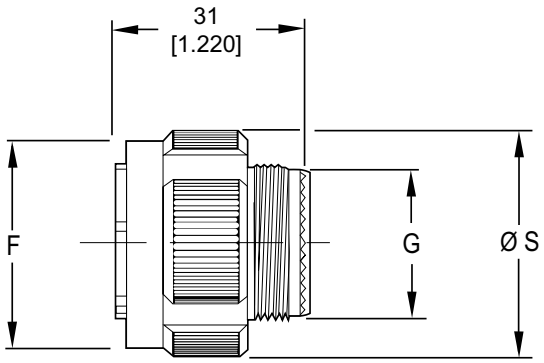

Shell Size	F Max.	G	S Max.	Mass (g) by Shell Type		
				Al	SS	Composite
09	**18.40** 0.724	**11.90** 0.469	**21.80** 0.858	**15**	**36**	**9**
11	**21.10** 0.831	**14.90** 0.587	**25.00** 0.984	**20**	**50**	**13**
13	**25.40** 1.000	**17.90** 0.705	**29.40** 1.157	**27**	**64**	**18**
15	**28.70** 1.130	**21.90** 0.862	**32.50** 1.280	**34**	**80**	**23**
17	**32.20** 1.268	**24.90** 0.980	**35.70** 1.406	**37**	**88**	**25**
19	**34.90** 1.374	**27.90** 1.098	**38.50** 1.516	**48**	**102**	**32**
21	**38.10** 1.500	**30.90** 1.217	**41.70** 1.642	**55**	**117**	**35**
23	**41.10** 1.618	**33.90** 1.335	**44.90** 1.768	**67**	**131**	**41**
25	**44.30** 1.744	**36.90** 1.453	**48.00** 1.890	**71**	**145**	**48**

Millimeters Inches

Coupling Torque: Plug to Receptacle

Shell Size	Engagement and Disengagement (Max.)		Minimum Disengagement	
	Nm	Lb.-in.	Nm	Lb.-in.
09	0.9	8	0.2	2
11	1.4	12		
13	1.8	16		
15	2.3	20	0.3	3
17	2.7	24		
19	3.2	28		
21	3.6	32	0.6	5
23	4.1	36		
25	4.6	40		

MIL-DTL-38999 Series III Connectors

DEUTSCH DTS and ACT Series Connectors

Mated/Unmated Dimensions

Square Flange Receptacle to Plug

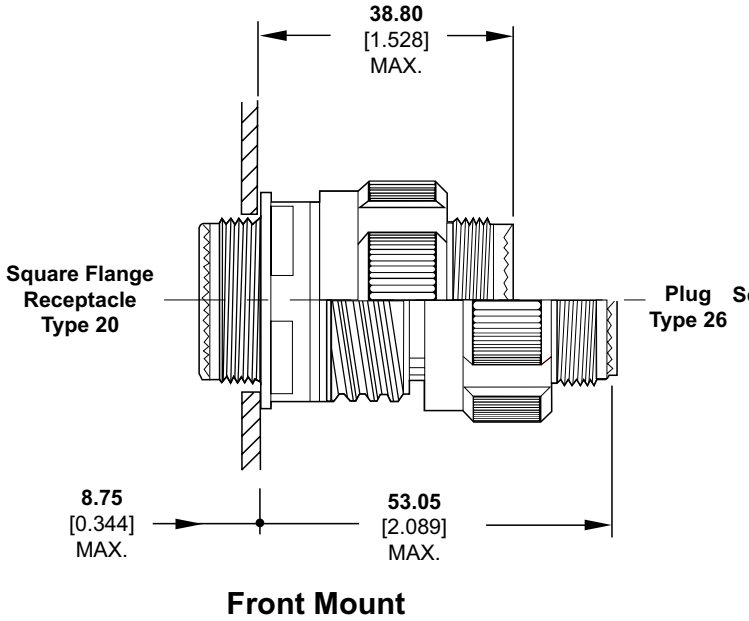

Front Mount

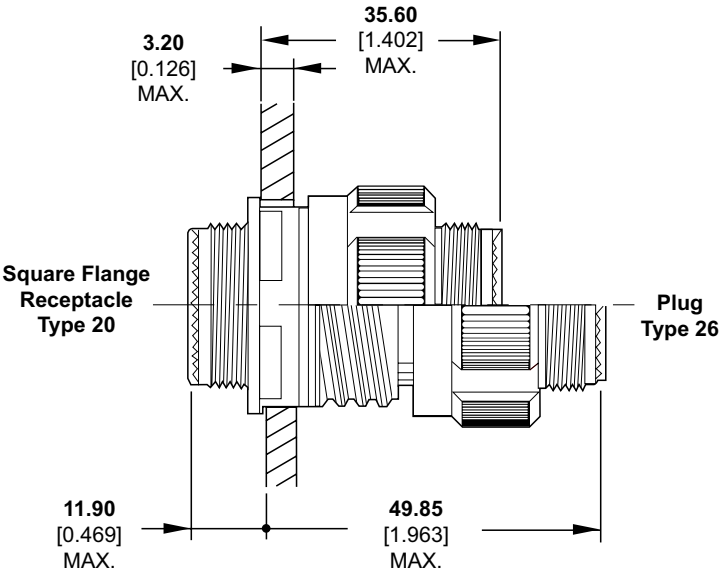

Rear Mount

Jam Nut Receptacle to Plug

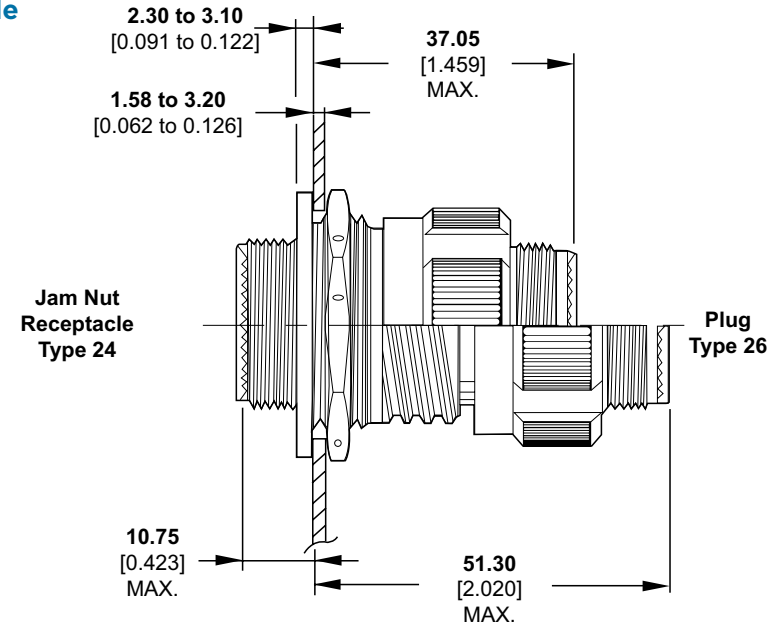

MIL-DTL-38999 Series III Connectors

DEUTSCH DTS and ACT Series Connectors

Dummy Receptacle
Type PR

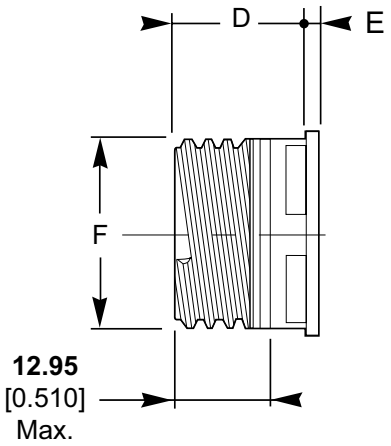

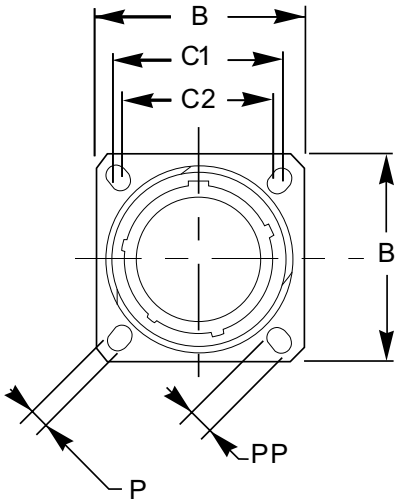

Shell Size	B	C1	C2	D Max.	E Max.	F	G	P	PP	Mass (g) by Shell Type		
										Al	SS	Composite
09	**23.80** 0.937	**18.26** 0.719	**15.09** 0.594	**20.90** 0.823	**2.50** 0.098	**15.73** 0.619	**3.25** 0.128	**5.49** 0.216	**5.49** 0.216	7	10	8
11	**26.20** 1.031	**20.62** 0.812	**18.26** 0.719	**20.90** 0.823	**2.50** 0.098	**18.91** 0.744	**3.25** 0.128	**4.93** 0.194	**4.93** 0.194	11	16	11
13	**28.60** 1.126	**23.01** 0.906	**20.62** 0.812	**20.90** 0.823	**2.50** 0.098	**22.08** 0.869	**3.25** 0.128	**4.93** 0.194	**4.93** 0.194	15	22	14
15	**31.00** 1.220	**24.61** 0.969	**23.01** 0.906	**20.90** 0.823	**2.50** 0.098	**25.26** 0.994	**3.25** 0.128	**4.93** 0.194	**4.93** 0.194	18	31	18
17	**33.30** 1.311	**26.97** 1.062	**24.61** 0.969	**20.90** 0.823	**2.50** 0.098	**29.96** 1.180	**3.25** 0.128	**4.93** 0.194	**4.93** 0.194	22	46	23
19	**36.50** 1.437	**29.36** 1.156	**26.97** 1.062	**20.90** 0.823	**2.50** 0.098	**31.54** 1.242	**3.25** 0.128	**4.93** 0.194	**4.93** 0.194	26	51	26
21	**39.70** 1.563	**31.75** 1.250	**29.36** 1.156	**20.10** 0.791	**3.20** 0.126	**34.72** 1.367	**3.25** 0.128	**4.93** 0.194	**4.93** 0.194	30	65	31
23	**42.90** 1.689	**34.93** 1.375	**31.75** 1.250	**20.10** 0.791	**3.20** 0.126	**37.90** 1.492	**3.91** 0.154	**6.15** 0.242	**6.15** 0.242	33	78	36
25	**46.00** 1.811	**38.10** 1.500	**34.93** 1.375	**20.10** 0.791	**3.20** 0.126	**41.07** 1.617	**36.90** 1.453	**3.91** 0.154	**6.15** 0.242	36	97	43

Millimeters Inches

MIL-DTL-38999 Series III Connectors

DEUTSCH DTS and ACT Series Connectors

Recommended Panel Cutouts

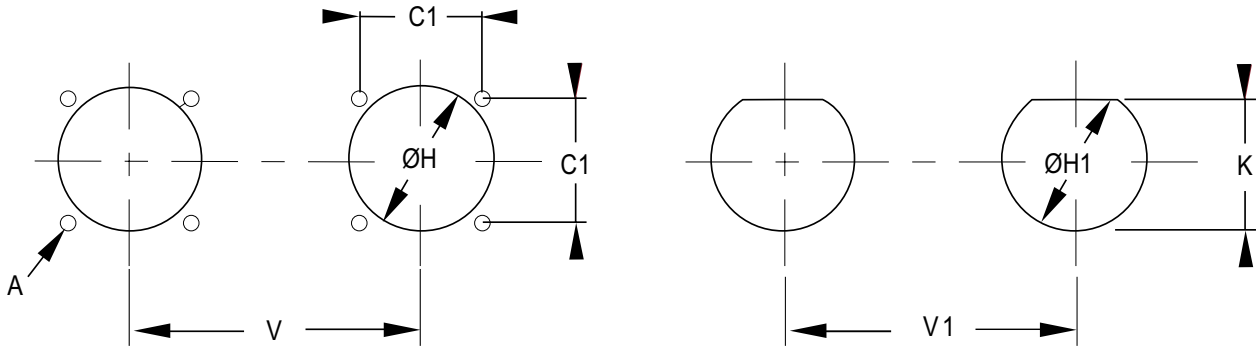

Square Flange Receptacle

Jam Nut Receptacle

Shell Size	A	C1	H Min. Front	H Min. Rear	H1 Max.	K Max.	V Min.	V1 Min.
9	3.25 0.128	**18.26** 0.719	**13.11** 0.516	**16.66** 0.656	**17.78** 0.700	**16.70** 0.657	**25.58** 1.007	**20.20** 1.189
11		**20.62** 0.812	**15.08** 0.594	**22.22** 0.875	**20.88** 0.822	**19.53** 0.769	**27.00** 1.063	**32.60** 1.283
13		**23.01** 0.906	**19.05** 0.750	**23.42** 0.922	**25.58** 1.007	**24.26** 0.995	**30.20** 1.189	**36.00** 1.417
15		**24.61** 0.969	**23.01** 0.906	**26.59** 1.047	**28.80** 1.134	**27.53** 1.084	**33.30** 1.331	**39.60** 1.559
17		**26.97** 1.062	**25.81** 1.106	**30.96** 1.219	**31.98** 1.259	**30.68** 1.208	**36.50** 1.437	**43.30** 1.705
19		**29.36** 1.156	**28.98** 1.141	**32.94** 1.297	**35.15** 1.384	**33.86** 1.333	**39.30** 1.547	**47.00** 1.850
21		**31.75** 1.250	**32.16** 1.266	**36.12** 1.422	**38.28** 1.507	**37.06** 1.459	**42.50** 1.673	**50.60** 1.992
23	3.91 0.154	**34.93** 1.375	**34.93** 1.375	**39.29** 1.547	**41.50** 1.634	**40.01** 1.575	**45.70** 1.799	**54.20** 2.134
25		**38.10** 1.500	**37.69** 1.484	**42.47** 1.672	**44.68** 1.759	**43.41** 1.709	**48.80** 1.921	**59.70** 2.350

Millimeters Inches

MIL-DTL-38999 Series III Connectors

DEUTSCH DTS and ACT Series Connectors

Keying Options

(Viewed from Mating Face of the Receptacle Connector)

Shell Size	Key Position	Polarization (Degrees)			
		A	B	C	D
09	N	105	140	215	265
	A	102	132	248	320
	B	80	118	230	312
	C	35	140	205	275
	D	64	155	234	304
	E	91	131	197	240
11, 13, 15	N	95	141	208	236
	A	113	156	182	292
	B	90	145	195	252
	C	53	156	220	255
	D	119	146	176	298
	E	51	141	184	242
17, 19, 21, 23, 25	N	80	142	196	293
	A	135	170	200	310
	B	49	169	200	244
	C	66	140	200	257
	D	62	145	180	280
	E	79	153	197	272

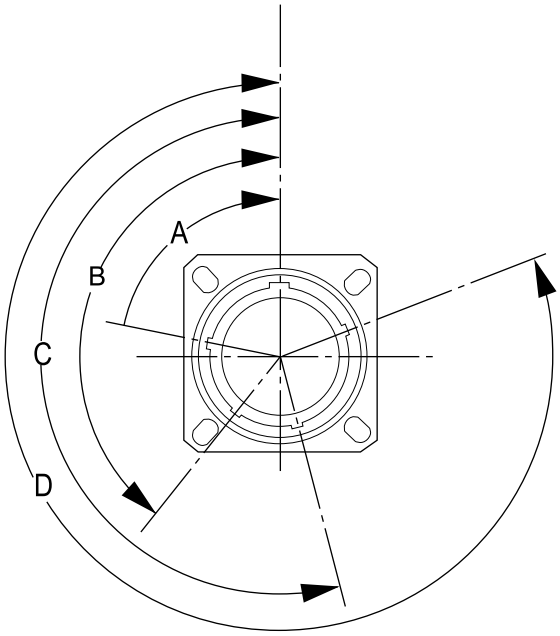

DEPENDABLE

- Secure breech lock coupling
- 100% scoop-proof
- Pin-to-pin mating protection helps prevent failures

RUGGED

- Mated connectors help withstand high-impact shock
- Rear accessory threads help provide increased strength
- >500-mating-cycle durability
- Corrosion resistant

EMI PROTECTED

- Grounding fingers for excellent EMI protection
- Connector is grounded when the shells meet, even before the contacts are engaged

EASY INSTALLATION

- Blind-mateable grounding fingers to help provide a safer assembly during mating
- Requires only 90° rotation to engage and disengage

MIL-DTL-38999 Series IV Connectors

DEUTSCH DIV Series Connectors

DEUTSCH DIV Series connectors from TE Connectivity (TE) are high-performance MIL-DTL-38999 connectors for use in high shock, vibration and EMI environments where reliability is essential.

Qualified to MIL-DTL-38999 specifications, DEUTSCH DIV Series connectors are designed and built using the high-vibration capable breech lock coupling mechanism that only requires 90° of rotation to engage and disengage.

Special grounding fingers form a 360-degree circle just inside the shell, acting as a shield for excellent EMI protection. The connector is actually grounded when the shells meet, even before the contacts engage.

Inserts are available in 8 shell sizes, with contact arrangements meeting MIL-DTL-1560, along with additional arrangements, to help provide flexibility in circuit configurations.

MIL-DTL-38999 Series IV Connectors

DEUTSCH DIV Series Connectors

Specifications

MATERIALS

- **Shell:** Stainless steel, aluminum
- **Plating:** Olive drab cadmium, passivated, and electroless nickel (anodized coupling ring for Class F only)
- **Insert:** Thermoplastic and fluorinated silicone elastomer
- **EMI Spring Fingers:** Nickel or cadmium-plated beryllium copper
- **O-Ring:** Fluorinated silicone elastomer

ENVIRONMENTAL

- **Temperature Range:**
  -65°C to +175°C (Class W)
  -65°C to +200°C (Classes C, F, Y and N)
- **Fluid Resistance:** Fluid immersion per EIA 364.10, including resistance to
  MIL-PRF-5606: Hydraulic fluid
  MIL-DTL-83133: JP-8 aviation fuel
  MIL-PRF-7808: Lubricating oil
  MIL-PRF-23699: Lubricating oil
  MIL-A-8243: Deicing/defrosting fluid
  MIL-C-25769: Aircraft cleaning compound
  MIL-PRF-87937: Aircraft cleaning compound
  MIL-G-3056: Gasoline
- **Salt Spray:**
  48 hours (Nickel finishes)
  500 hours (Cadmium and passivated finishes)
- **Thermal Cycling:** -65° to 150/175/200°C (max. temperature is class dependent)

MECHANICAL

- **Sine Vibration:** Up to 60 g for 36 hr.
- **Random Vibration:** Up to 41.7 g for 16 hr. at 175° C
  Up to 50 g for 16 hr. at ambient temperature
- **Shock:** 300 g, 3 ms in the 3 axes
- **Durability:** >500 mating cycles
- **Contact Retention:**
  Size 22D: 44 N (10 lb.)
  Size 20: 67 N (15 lb.)
  Size 16: 111 N (25 lb.)
  Size 12: 111 N (25 lb.)
  Size 10: 111 N (25 lb.)
  Size 8: 111 N (25 lb.)

ELECTRICAL

- **Shell-to-Shell Conductivity:**
  Olive Drab Cadmium: 2.5 mV
  Passivated: 10.0 mV
  Electroless Nickel: 1.0 mV
- **Shielding Effectiveness:** >90 dB at 100 MHz, >65 dB through 10 GHz

MIL-DTL-38999 Series IV Connectors

DEUTSCH DIV Series Connectors

Voltage Rating

Service Rating	Suggested Operating Voltage		Test Voltage at Altitude (VAC_{rms})			
	VAC_{rms}	VDC	Sea Level	50,000 Ft.	70,000 Ft.	100,000 Ft.
M	400	550	1300	550	350	200
N	300	450	1000	400	260	200
I	600	850	1800	600	400	200
II	750	1050	2300	800	500	200

Hermetic Connectors

- **Hermetic Seal:** Sintered glass
- **Leakage:** ≤16 cm^3/hr. (0.97 in^3/hr.) on mated pairs connected under 2.1 bar (4.38 psi)
- **Thermal Shock:** 10 cycles, 4°C max. to 90°C min.

Current Rating

Contact Size	Test Current (A)	Voltage Drop (mV)
22D	5	73
20	7.5	55
16	13	50
12	23	42
10	33	34
8*	46	26

*When commercial power contact replaces twin-ax contact

Thread Sizes

Shell Size	Accessory Thread (6g 0.100R)	Jam Nut Thread (6g 0.100R)
11	M15 x 1.0	M20 x 1.0
13	M18 x 1.0	M25 x 1.0
15	M22 x 1.0	M28 x 1.0
17	M25 x 1.0	M32 x 1.0
19	M28 x 1.0	M35 x 1.0
21	M31 x 1.0	M38 x 1.0
23	M34 x 1.0	M41 x 1.0
25	M37 x 1.0	M44 x 1.0

MIL-DTL-38999 Series IV Connectors

DEUTSCH DIV Series Connectors

Insert		Contact Size/Quantity													
DIV Commercial	Military	8 Twinax	8 Coax	8 Power	12 Twinax	12 Coax	10	12	16	20	22D	QPL	QPL Hermetic	Uses 38999/62-8* Boots	Inactive: Superseded by
11-02	B2								2			✔	✔		
11-04	B4									4		✔	✔		
11-05	B5									5		✔	✔		
11-35	B35										13	✔	✔		
11-98	B98									6		✔	✔		
11-99	B99									7		✔	✔		
13-04	C4								4			✔	✔		
13-08	C8									8		✔	✔		
13-35	C35										22	✔	✔		
13-98	C98									10		✔	✔		
15-05	D5								5			✔	✔		
15-15	D15								1	14		✔	✔		
15-18	D18									18		✔	✔		
15-19	D19									19		✔	✔		
15-26	D26								2		24				
15-35	D35										37	✔	✔		
15-97	D97								4	8		✔	✔		
17-02	E2	1									38				17-03
17-03	E3	1									38			✔	
17-06	E6							6				✔	✔		
17-08	E8								8			✔	✔		
17-11	E11				2	1				8					
17-19	E19								4	11	4				
17-20	E20							4			16				
17-22	E22	2						2							
17-24	E24			2							22				
17-26	E26									26		✔			
17-35	E35										55	✔	✔		
17-99	E99								2	21		✔	✔		
19-11	F11								11			✔	✔		
19-18	F18	4									14	✔			19-19
19-19	F19	4									14	✔		✔	
19-28	F28								2	26			✔		
19-32	F32									32		✔			
19-35	F35										66	✔	✔		

Blue shaded entries are not Mil Spec.

MIL-DTL-38999 Series IV Connectors

DEUTSCH DIV Series Connectors

Insert		Contact Size/Quantity													
DIV Commercial	Military	8 Twinax	8 Coax	8 Power	12 Twinax	12 Coax	10	12	16	20	22D	QPL	QPL Hermetic	Uses 38999/62-8* Boots	Inactive: Superseded by
21-11	G11							11				✔	✔		
21-16	G16								16			✔	✔		
21-20	G20	2								18					
21-35	G35										79	✔	✔		
21-39	G39								2	37		✔	✔		
21-41	G41									41		✔	✔		
21-48	G48			4											
21-75	G75	4													21-76
21-76	G76	4												✔	
23-06	H6	6													
23-21	H21								21			✔	✔		
23-35	H35										100	✔	✔		
23-53	H53									53		✔	✔		
23-54	H54							4	9		40				
23-55	H55									55		✔	✔		
23-63	H63							4	4		49				
25-04	J4								8	48		✔	✔		
25-07	J7	2									97				25-09
25-08	J8	8													25-10
25-09	J9	2									97			✔	
25-10	J10	8												✔	
25-17	J17	6									36				
25-19	J19							19				✔	✔		
25-20	J20	3				4			13	10					25-21
25-21	J21	3				4			13	10				✔	
25-24	J24							12	12			✔	✔		
25-29	J29								29			✔	✔		
25-35	J35										128	✔	✔		
25-37	J37								37			✔			
25-43	J43								20	23			✔		
25-46	J46		2						4	40					25-47
25-47	J47		2						4	40				✔	
25-61	J61									61		✔	✔		
25-90	J90	2							4	40					25-91
25-91	J91	2							4	40				✔	

Blue shaded entries are not Mil Spec.

MIL-DTL-38999 Series IV Connectors

DEUTSCH DIV Series Connectors

Part Numbering
MIL-DTL-38999 and DEUTSCH Commercial Versions

Military	D38999/	40	W	J		35	P	N	-	L/C
Commercial	DIV	40	E	25	-	35	P	N	-	6139

Commercial	Military	
PREFIX		
SHELL STYLE/MIL SLASH SHEET		
40	**40**	Wall Mount Receptacle
43	**42**	Box Mount Receptacle
44	**44**	Jam Nut Receptacle
46	**46**	Straight Plug with EMI Fingers
47	**47**	Straight Plug without EMI Fingers
48	**48**	In-Line Receptacle
Hermetic Connectors		
41	**45**	Hermetic Solder Mount Receptacle
44	**43**	Hermetic Jam Nut Receptacle
CLASS/FINISH		
E	**F**	Electroless Nickel, Black Anodized Coupling Ring
F	**(Not Avail.)**	Electroless Nickel, Green Anodized Coupling Ring
G	**G**	Space Grade, Electroless Nickel
E (023)	**W**	Olive Drab Cadmium over Nickel
Hermetic Connectors		
H	**H**	Stainless Steel, Passivated, Space Grade
N	**N**	Stainless Steel, Nickel Plated
Y	**Y**	Stainless Steel, Passivated
SHELL SIZE		
11 (B), 13 (C), 15 (D), 17 (E), 19 (F), 21 (G), 23 (H), 25 (J)		Numbers = DIV Commercial (Letters) = Military
INSERT ARRANGEMENT		See Insert Arrangement Tables, pages 10-17 and 47-48
CONTACTS		
P 500-Cycle Pin		**S** 500-Cycle Socket
H 1500-Cycle Pin		**J** 1500-Cycle Socket
A Less Pin (with intent to use nonstandard contacts)		
B Less Socket (with intent to use nonstandard contacts)		
Hermetic Contacts		
P Pin, Solder Cup		**S** Socket, Solder Cup
X Pin, Eyelet		**Z** Socket, Eyelet
C Pin, PC Tail		**D** Socket, PC Tail
POLARIZING POSITIONS		
N Normal		
A, B, C, D, K		
MODIFICATIONS		
023*		Use to Get Military Class W with Contacts
6149*		Use for Mil Class F Less Contacts
6139*		Use for Mil Class W Less Contacts
L/C**		Less Contacts

*Use with Commercial DIV callout only
**Use with Military D38999 callout only

MIL-DTL-38999 Series IV Connectors

DEUTSCH DIV Series Connectors

Wall Mount/Square Flange Receptacle

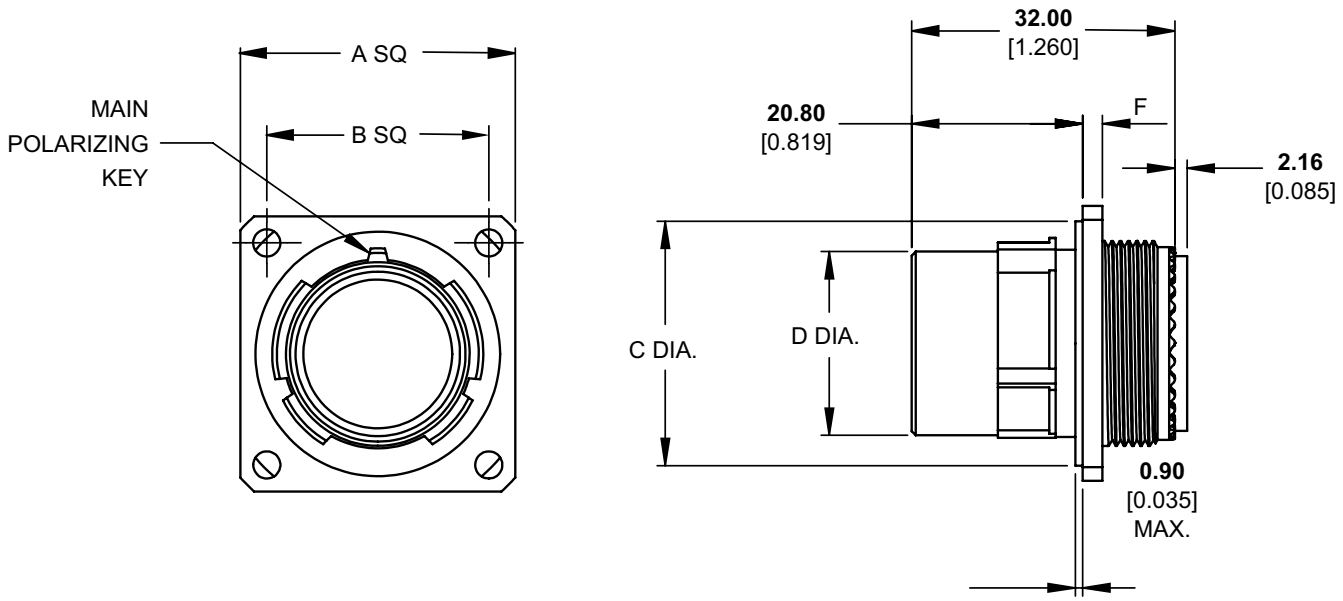

Shell Size	A Sq. Max.	B Sq.	ØC Max.	ØD Max.	F
11	**26.70** 1.051	**20.62** 0.812	**20.15** 0.793	**12.93** 0.509	**2.60** 0.102
13	**29.10** 1.146	**23.02** 0.906	**23.35** 0.919	**16.10** 0.634	**2.60** 0.102
15	**31.50** 1.240	**24.62** 0.970	**26.52** 1.044	**19.28** 0.759	**2.60** 0.102
17	**33.90** 1.335	**26.98** 1.062	**29.72** 1.170	**22.48** 0.885	**2.60** 0.102
19	**37.10** 1.461	**29.36** 1.156	**32.87** 1.294	**25.63** 1.009	**2.60** 0.102
21	**40.20** 1.583	**31.76** 1.250	**36.05** 1.419	**28.80** 1.134	**3.40** 0.133
23	**43.40** 1.709	**34.92** 1.374	**39.22** 1.544	**31.98** 1.259	**3.40** 0.133
25	**46.60** 1.835	**38.10** 1.500	**42.40** 1.669	**35.15** 1.384	**3.40** 0.133

Millimeters Inches

MIL-DTL-38999 Series IV Connectors

DEUTSCH DIV Series Connectors

Jam Nut Receptacle

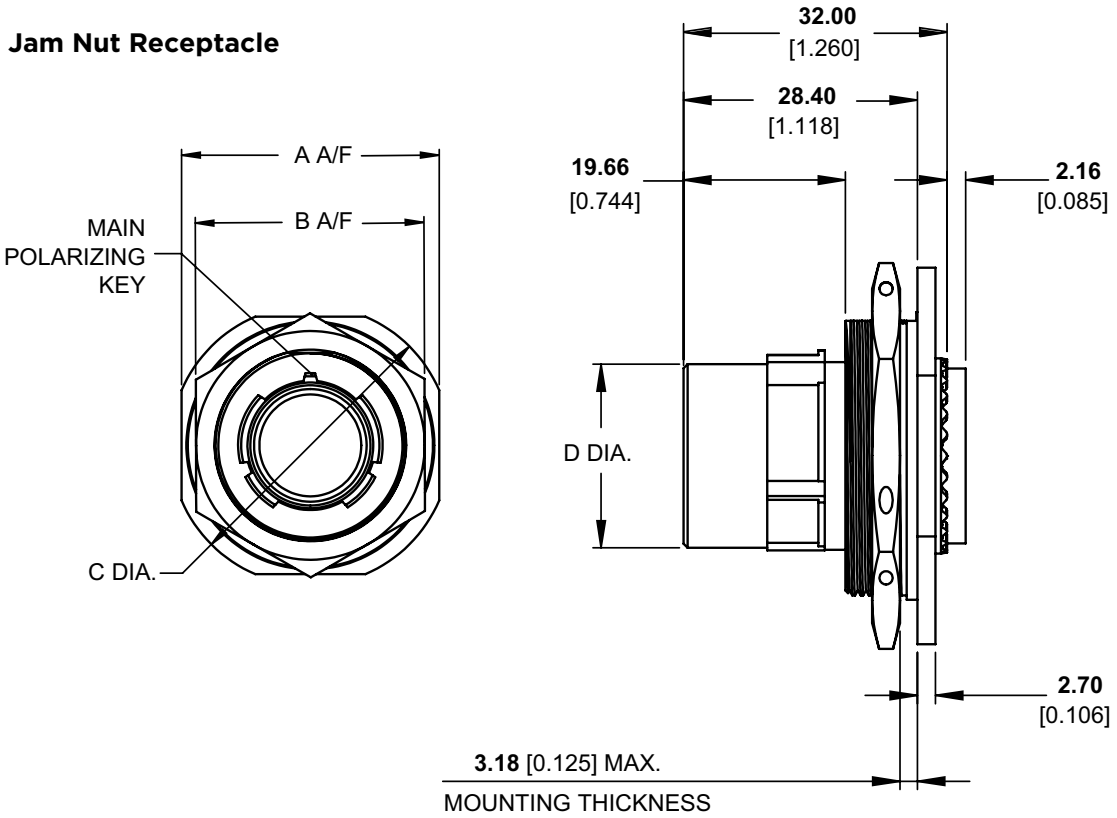

Shell Size	A A/F Max.	B A/F Max.	C Dia. Max.	D Dia. Max.
11	**35.40** 1.394	**32.00** 1.260	**38.60** 1.520	**12.93** 0.509
13	**38.60** 1.520	**36.00** 1.417	**41.70** 1.642	**16.10** 0.634
15	**41.70** 1.642	**41.00** 1.614	**44.90** 1.768	**19.28** 0.759
17	**45.70** 1.799	**41.00** 1.614	**49.70** 1.957	**22.48** 0.885
19	**48.50** 1.909	**46.00** 1.811	**51.70** 2.035	**25.63** 1.009
21	**51.70** 2.035	**50.00** 1.968	**54.80** 2.157	**28.80** 1.134
23	**54.80** 2.157	**50.00** 1.968	**58.00** 2.283	**31.98** 1.259
25	**58.00** 2.283	**55.00** 2.165	**61.20** 2.409	**35.15** 1.384

Millimeters Inches

MIL-DTL-38999 Series IV Connectors

DEUTSCH DIV Series Connectors

Box Mount Receptacle

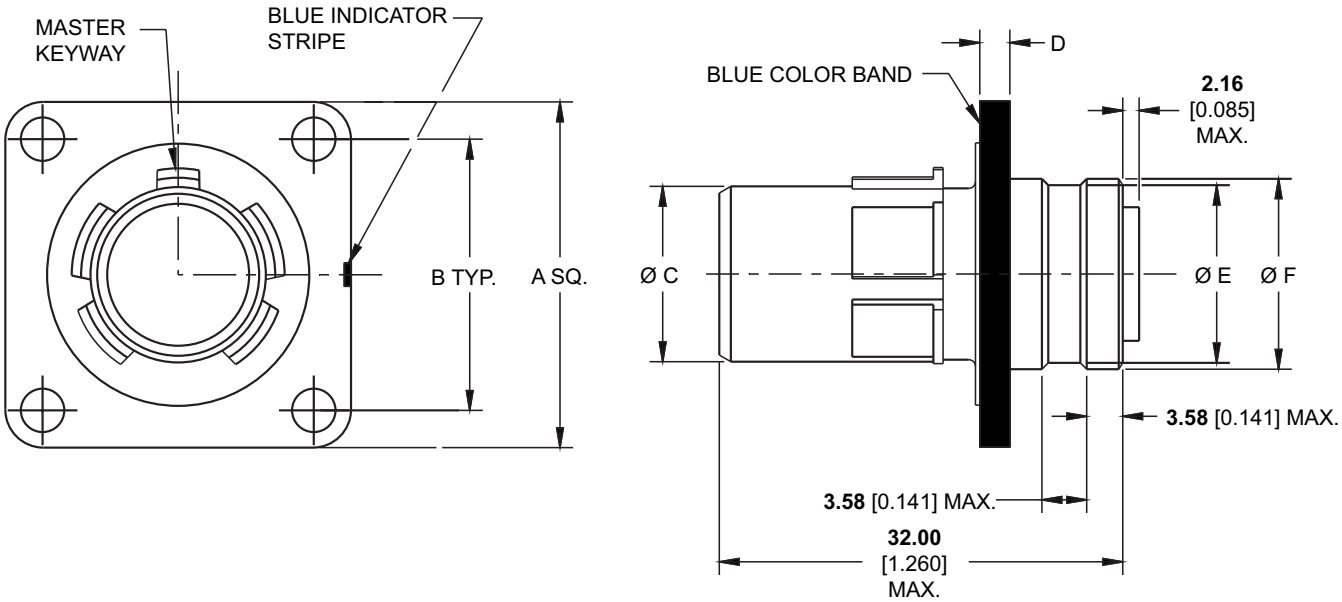

Shell Size	A Sq. Max.	B Sq.	ØC Max.	D	ØE	ØF
11	**26.70** 1.051	**20.62** 0.812	**20.15** 0.793	**2.60** 0.102	**13.41** 0.528	**14.50** 0.571
13	**29.10** 1.146	**23.02** 0.906	**23.35** 0.919	**2.60** 0.102	**16.31** 0.642	**17.40** 0.685
15	**31.50** 1.240	**24.62** 0.970	**26.52** 1.044	**2.60** 0.102	**19.41** 0.764	**20.60** 0.811
17	**33.90** 1.335	**26.98** 1.062	**29.72** 1.170	**2.60** 0.102	**22.61** 0.890	**23.80** 0.937
19	**37.10** 1.461	**29.36** 1.156	**32.87** 1.294	**2.60** 0.102	**25.30** 0.996	**26.52** 1.044
21	**40.20** 1.583	**31.76** 1.250	**36.05** 1.419	**3.40** 0.133	**28.52** 1.123	**29.620** 1.166
23	**43.40** 1.709	**34.92** 1.374	**39.22** 1.544	**3.40** 0.133	**31.70** 1.248	**32.82** 1.292
25	**46.60** 1.835	**38.10** 1.500	**42.40** 1.669	**3.40** 0.133	**34.82** 1.371	**36.02** 1.418

Millimeters Inches

MIL-DTL-38999 Series IV Connectors

DEUTSCH DIV Series Connectors

Plug

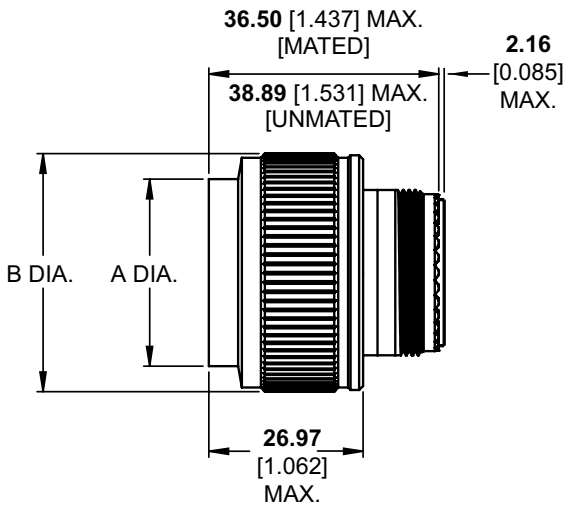

Shell Size	Ø A Max.	Ø B Max.
11	**26.60** 1.047	**19.70** 0.775
13	**31.00** 1.220	**22.90** 0.901
15	**34.20** 1.346	**26.40** 1.039
17	**37.40** 1.472	**29.20** 1.149
19	**40.20** 1.583	**32.40** 1.275
21	**43.30** 1.704	**35.60** 1.401
23	**46.50** 1.831	**38.80** 1.527
25	**49.70** 1.957	**41.90** 1.649

Millimeters Inches

MIL-DTL-38999 Series IV Connectors

DEUTSCH DIV Series Connectors

Recommended Panel Cutouts

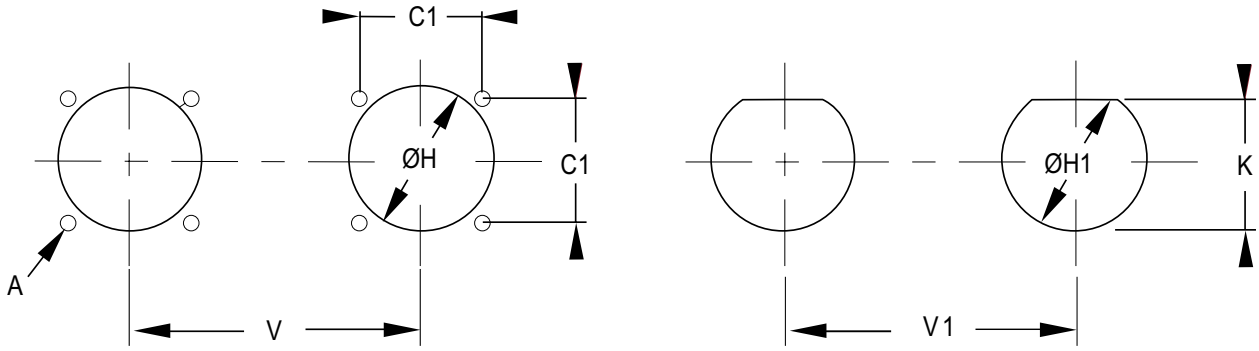

Square Flange Receptacle

Jam Nut Receptacle

Shell Size	C1	H Min.		H1 Max.	K Max.	V Min.	V1 Min.
		Front	Rear				
11	**20.62** 0.812	**15.08** 0.594	**22.22** 0.875	**20.88** 0.822	**19.53** 0.769	**27.00** 1.063	**32.60** 1.283
13	**23.01** 0.906	**19.05** 0.750	**23.42** 0.922	**25.58** 1.007	**24.26** 0.995	**30.20** 1.189	**36.00** 1.417
15	**24.61** 0.969	**23.01** 0.906	**26.59** 1.047	**28.80** 1.134	**27.53** 1.084	**33.30** 1.331	**39.60** 1.559
17	**26.97** 1.062	**25.81** 1.106	**30.96** 1.219	**31.98** 1.259	**30.68** 1.208	**36.50** 1.437	**43.30** 1.705
19	**29.36** 1.156	**28.98** 1.141	**32.94** 1.297	**35.15** 1.384	**33.86** 1.333	**39.30** 1.547	**47.00** 1.850
21	**31.75** 1.250	**32.16** 1.266	**36.12** 1.422	**38.28** 1.507	**37.06** 1.459	**42.50** 1.673	**50.60** 1.992
23	**34.93** 1.375	**34.93** 1.375	**39.29** 1.547	**41.50** 1.634	**40.01** 1.575	**45.70** 1.799	**54.20** 2.134
25	**38.10** 1.500	**37.69** 1.484	**42.47** 1.672	**44.68** 1.759	**43.41** 1.709	**48.80** 1.921	**59.70** 2.350

Millimeters Inches

MIL-DTL-38999 Series IV Connectors

DEUTSCH DIV Series Connectors

Keying Options

(Viewed from Mating Face of the Receptacle Connector)

Clocking	X° Ref.	Y° Ref.
N	110	250
A	100	260
B	90	270
C	80	280
D	70	290
K	120	255

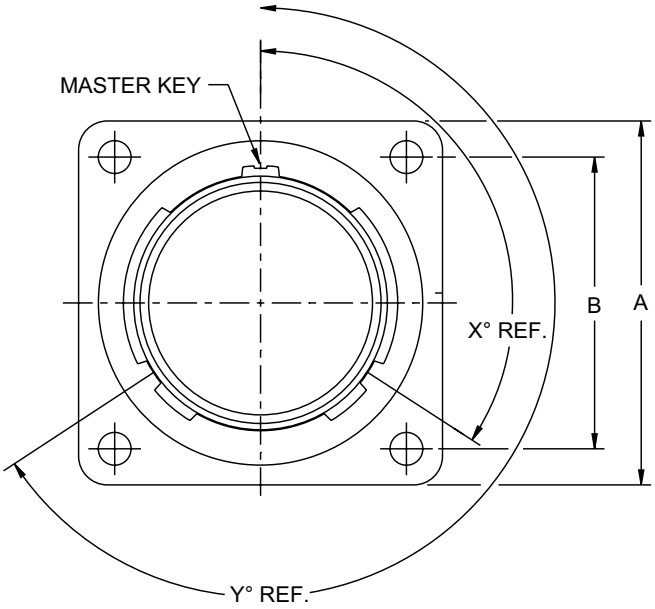

Panel Seals

Panel seals help improve the sealing between the structure and connector shell.

- **Color:** Tan
- **Elastomer:** Fluorosilicone
- **Temperature Range:** -40°C to +93°C

RUGGED

- RoHS

APPLICATIONS

- DataCom
- Military
- Medical

Front Flange Mounting								Rear Flange Mounting		
Size	**Part Number**	**H max.**	**B max.**	**C ± 0.1**	**E max.**	**E1 max.**	**T max.**	**H max.**	**Part Number**	**Size**
09	108-0003-10	15.40	24.30	18.30	3.00	5.92	3.30	14.10	108-0004-10	09
11	108-0001-12	19.20	26.40	20.60	3.00	5.92	3.30	17.20	108-0004-12	11
13	108-0001-14	22.70	29.10	23.00	3.00	5.92	3.30	20.40	108-0004-14	13
15	108-0001-16	25.90	31.30	24.60	3.00	5.92	3.30	23.60	108-0004-16	15
17	108-0003-18	29.10	33.70	27.00	3.00	5.92	3.30	26.80	108-0004-18	17
19	108-0003-20	32.30	36.90	29.40	3.00	5.92	3.30	30.60	108-0001-20	19
21	108-0003-22	35.40	40.10	31.75	3.00	5.16	3.30	33.50	108-0001-22	21
23	108-0003-24	38.60	43.30	34.90	3.00	5.16	4.30	36.30	108-0004-24	23
25	108-0001-25	41.40	46.00	38.10	3.00	4.87	4.30	39.00	108-0012-25	25

For Square Flange Receptacle
Sealed Version

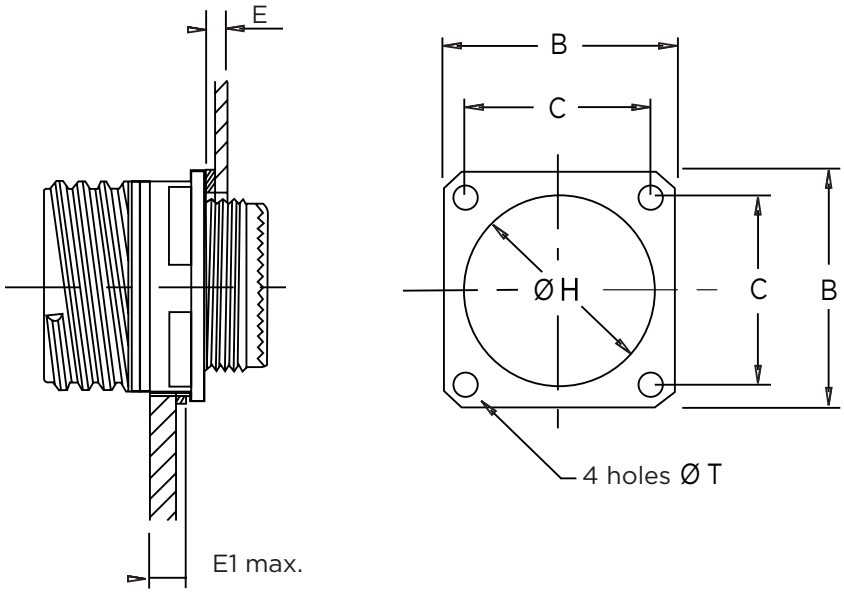

Conductive Panel Seals

In addition to improving sealing, conductive panel seals also improve conductivity and reduce resistivity for EMI improvement between the connector shell and the panel of the structure/system.

- **Color:** Tan
- **Elastomer:** Fluorosilicone
- **Filler:** Silver aluminum
- **Hardness:** 70 ± 7 Shore A
- **Volume Resistivity:** 0.010 ohm-cm, maximum
- **Density:** 2.0 ± 0.25 g/cm^3
- **Tensile Strength:** 200 psi, minimum
- **Elongation:** 60%–260%
- **100%–300%:** 35 ppi, minimum
- **Temperature Range:** -55°C to +160°C

RUGGED

- Material achieves the performances of MIL-DTL-83528 Type D
- Extended temperature range
  - Improves standard environmental resistance
- Provides strong EMI protection
- RoHS

APPLICATIONS

- DataCom
- Military
- Medical

Square Flange Receptacle Shell Size	Conductive (Front) Panel Seal Refs
9 / A	PC-CO**161**FAB0032-126 SIZE 09-SAFS
11 / B	PC-CO**162**FAB0032-126 SIZE 11-SAFS
13 / C	PC-CO**138**FAB0032-126 SIZE 13-SAFS
15 / D	PC-CO**163**FAB0032-126 SIZE 15-SAFS
17 / E	PC-CO**164**FAB0032-126 SIZE 17-SAFS
19 / F	PC-CO**165**FAB0032-126 SIZE 19-SAFS
21 / G	PC-CO**136**FAB0032-126 SIZE 21-SAFS
23 / H	PC-CO**137**FAB0032-126 SIZE 23-SAFS
25 / J	PC-CO**166**FAB0032-126 SIZE 25-SAFS

GASKET 09
D38999/20 Series III (Shell Size 09)

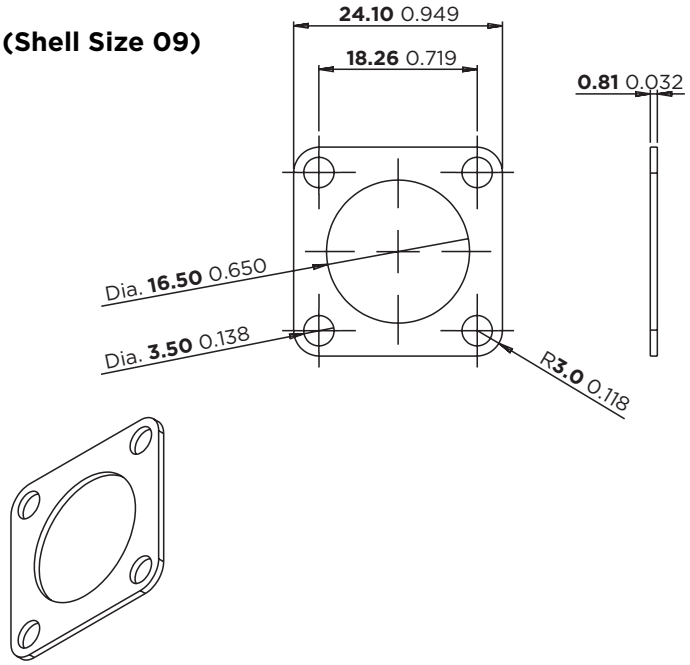

Millimeters Inches

Conductive Panel Seals

GASKET 11
D38999/20 Series III (Shell Size 11)

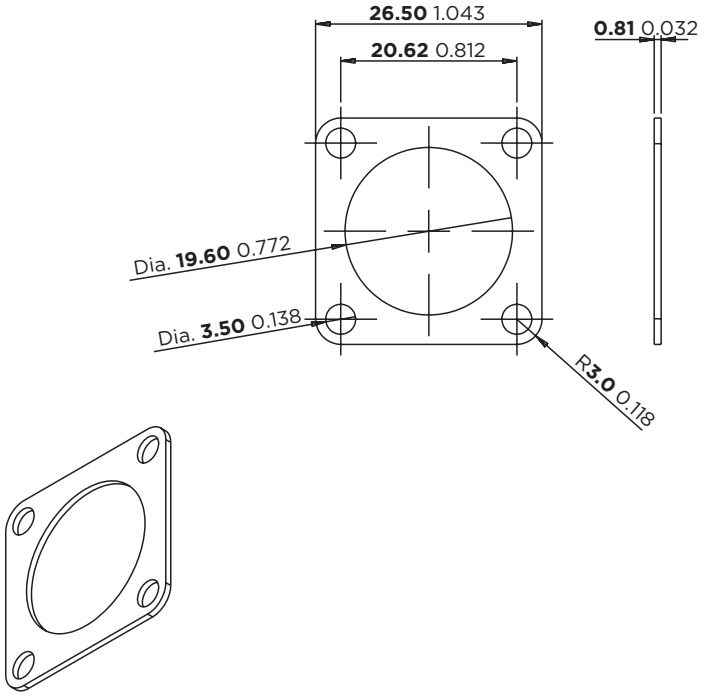

Millimeters Inches

GASKET 13
D38999/20 Series III (Shell Size 13)

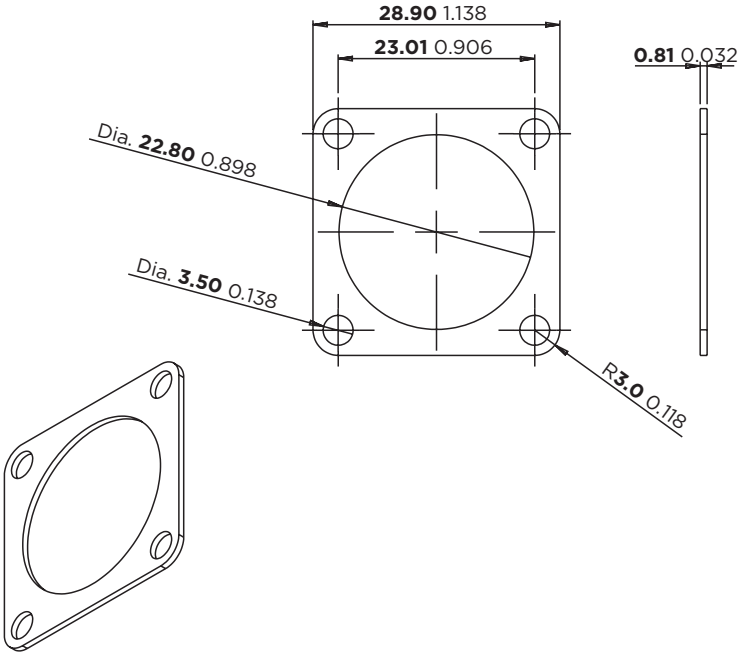

Millimeters Inches

Conductive Panel Seals

GASKET 15
D38999/20 Series III (Shell Size 15)

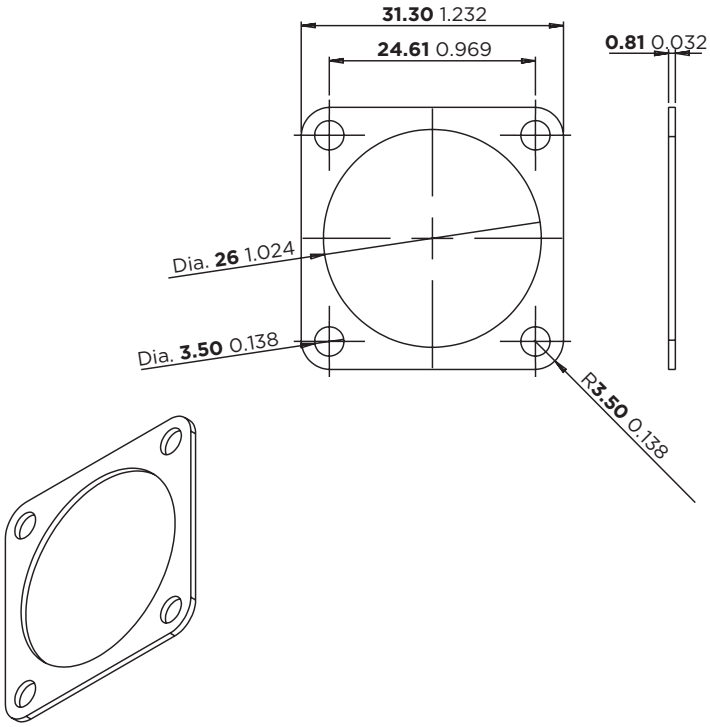

Millimeters Inches

GASKET 17
D38999/20 Series III (Shell Size 17)

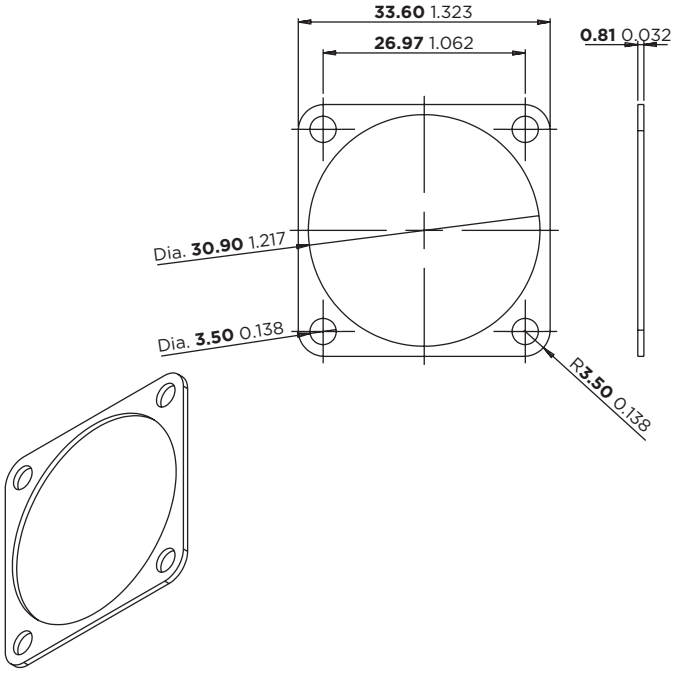

Millimeters Inches

Conductive Panel Seals

GASKET 19
D38999/20 Series III (Shell Size 19)

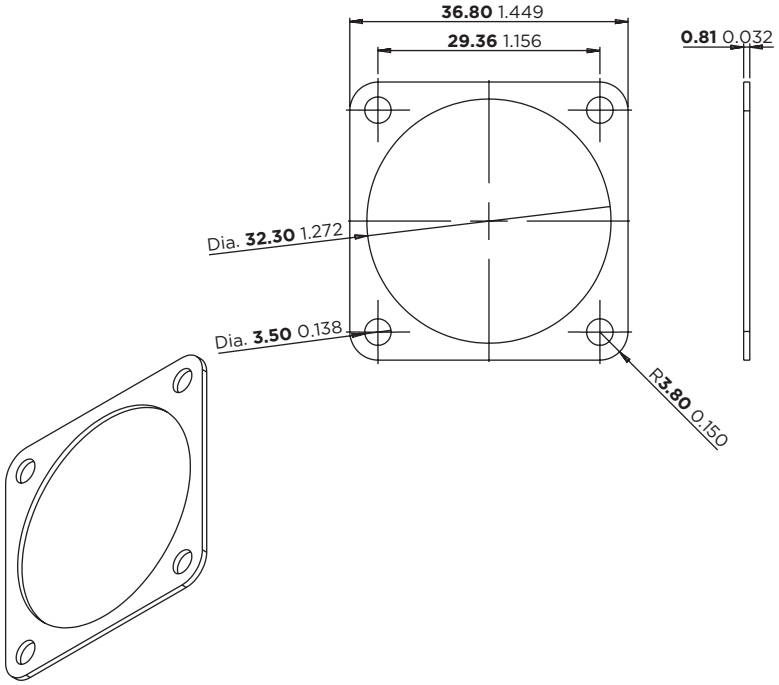

Millimeters Inches

GASKET 21
D38999/20 Series III (Shell Size 21)

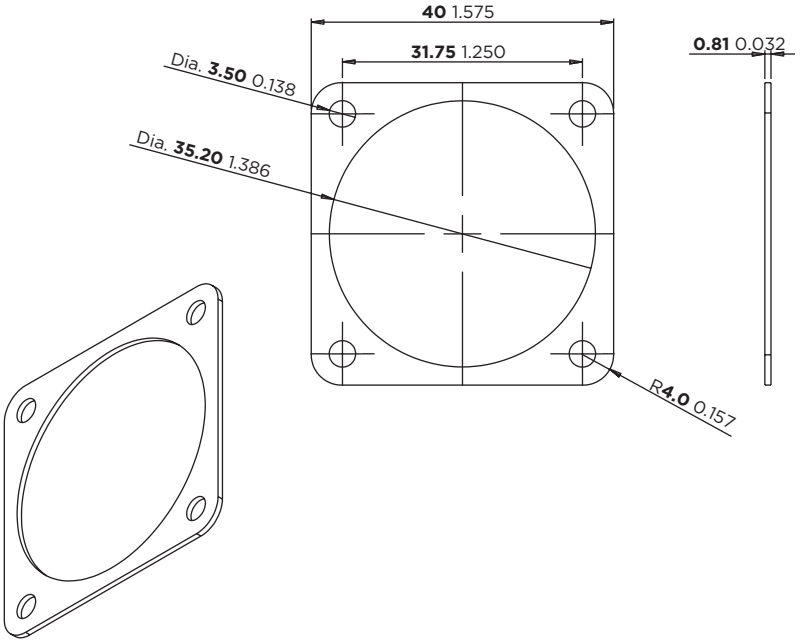

Millimeters Inches

Conductive Panel Seals

GASKET 23
D38999/20 Series III (Shell Size 23)

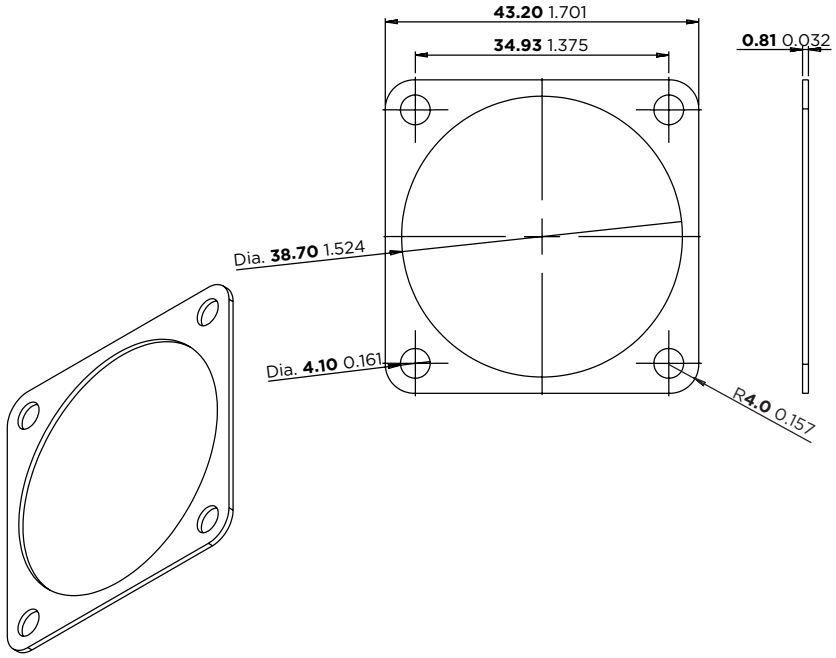

Millimeters Inches

GASKET 25
D38999/20 Series III (Shell Size 25)

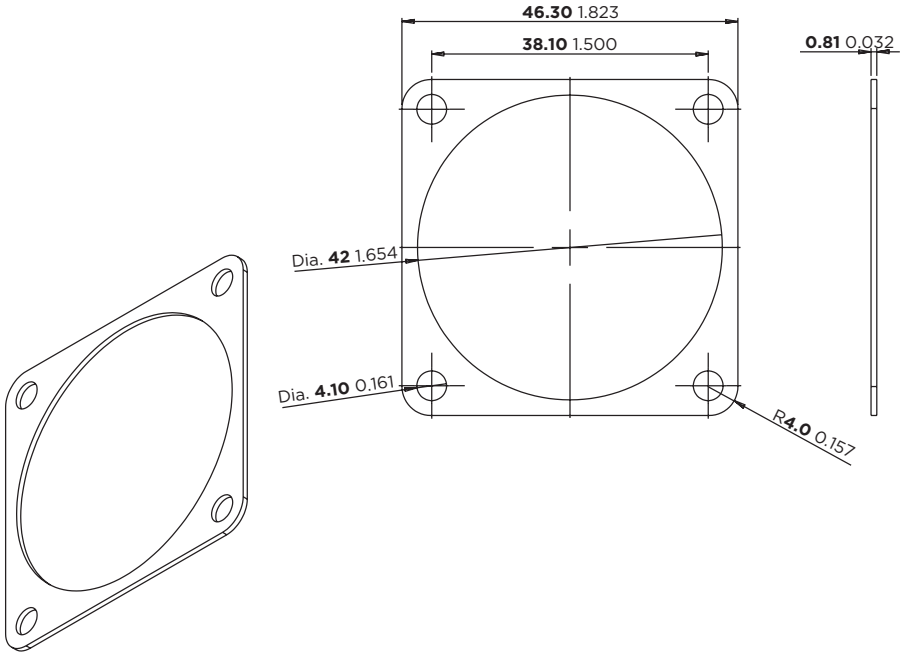

Millimeters Inches

EXTREME TEMPERATURE

- -65°C to +200°C

AIRTIGHT/VACUUM

- <1x10^{-7} cm^3/s @ 14.7 psi

ENVIRONMENTAL CONDITIONS

- Fluid resistance
- Corrosion resistance
- High vibration

APPLICATIONS

- Sensors
- Fuel tank systems
- Down-hole drilling equipment
- Electronic equipment
- Engine accessories
- Pyrotechnic equipment
- Vacuum chambers
- Optical devices
- Missiles
- Avionics
- Sealed environments

MIL-DTL-38999 Hermetic Connectors

Since the early 1960s TE Connectivity has been producing DEUTSCH hermetically sealed glass-to-metal connectors for applications where temperature, pressure, and environmental considerations render standard connectors unusable. Hermetic connectors are used to separate an inert atmosphere or vacuum on one side from wide-ranging high-pressure, high temperature, or corrosive conditions on the other. They are also used to maintain a pressure differential between the two sections. In short, DEUTSCH hermetic connectors are designed to help provide a continuously gas-tight seal while withstanding:

- High pressures
- Extreme temperatures
- High vibration

Hermetic connectors are also an excellent choice when you are not exactly sure of the conditions that will affect your connector's performance. Hermetic connectors may meet many of the most rigid environmental and electrical specifications, which is important when dealing with variables that are unknown.

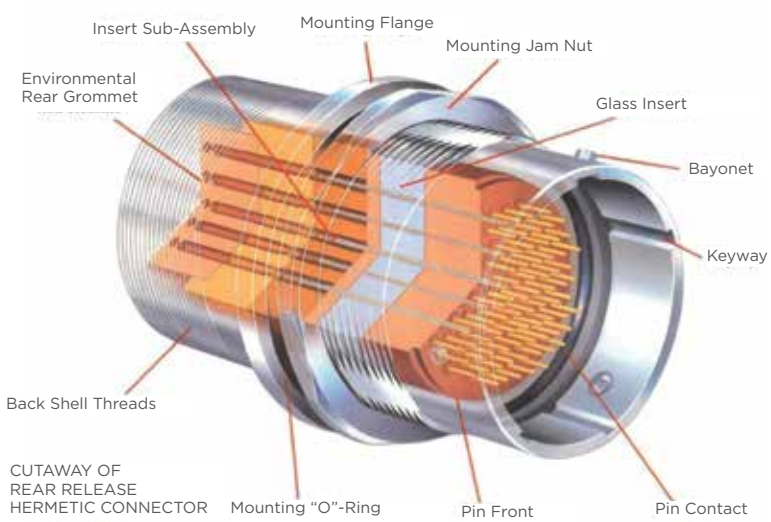

Glass-to-Metal Sealing

Standard sealing techniques—such as epoxy potting—are useful in many applications, but they may not provide the degree of sealing that is offered by glass-to-metal hermetic seals. This is especially true of applications with high pressure differentials. Glass is a durable, high-strength material that resists extreme changes in temperature or pressure.

Our glass-to-metal seals create a bond between shell, insulator, and contacts by fusing the glass insulator to the metal components. The bond can maintain a helium leak rate of .01 micron ft^3/h at 14.7 psi. The hermetic bond helps provide enduring reliability, resists cracking that would compromise the performance, and helps withstand a wide range of harsh conditions.

MIL-DTL-38999 Hermetic Connectors

Compression vs. Matched Seals

DEUTSCH hermetic connectors are produced using both compression seals and matched seals. In a matched seal, the metal and glass have similar coefficients of thermal expansion (CTE). This reduces stress on the glass from thermal expansion and contraction.

In a compression seal, the metal has a higher CTE than the glass. During the firing process the metal expands more than the glass. As the glass and metal then cool, the metal contracts back onto the glass to form an extremely robust bond. Compression seals are used for high-pressure applications.

Controlling Quality from Start to Finish

We design and manufacture all the components in our hermetic connectors. Our shells are made with high-grade materials—from stainless steel bar stock to exotic metals like titanium. We use high-grade silica and binders for the glass and the elastomer materials are carefully matched to the required connector application. When fused with the contacts and the shell, the inserts produce a true hermetic seal. Pin or socket contacts are available with solder pot, eyelet, and extended pin terminations. Our contacts can be made from a variety of materials like nickel iron, Alumel, Chromel, and copper-cored nickel iron. An important consideration in material selection is the ability to withstand the high temperatures of the sealing process. All connectors are fully leak tested by TE to help ensure the integrity of the hermetic seal.

Materials

Standard materials for hermetic connectors include:

- **Shell:** Stainless steel
- **Insert:** Glass
- **Contacts:** Nickel iron (52 Alloy)

Other materials are used, depending on special requirements for:

- High current
- High voltages
- High pressures
- Extreme temperatures
- Severe corrosion conditions

Weight-Saving Aluminum Hermetic Connectors

DEUTSCH aluminum hermetic connectors use an aluminum alloy shell to create connectors that are 60% lighter than stainless steel counterparts—two aluminum connectors weigh less than a single stainless steel equivalent.

- Up to 60% lighter
- Higher conductivity: up to 250 A
- Lower contact resistance: less than half that of nickel-iron contacts
- Wide temperature range: -85°C to +300°C

A Full Range of Hermetic Choices

DEUTSCH hermetic connectors are available in a variety of military and commercial styles. Options include a choice of:

Pin or socket contacts: Available with solder pot, eyelet, and extended pin terminations

Rear-release crimp termination to help reduce costs by eliminating soldering processes and potting and by allowing use of standard crimp tools

Feedthroughs provide a single device that can be terminated on both sides

Hermetic assemblies with connectors pre-installed in a mounting fixture to reduce your manufacturing time and speed installation

Custom connectors and configurations for applications not easily accommodated by standard offerings. Hermetic connectors lend themselves well to short production runs.

MIL-DTL-38999 Hermetic Connectors

	Military Part No.	DEUTSCH Part No.	Mount Type	Mil Class	Contact Styles
Series I Scoop-proof bayonet coupling	MS27469	DJT10	Wall	H: Space grade Y: Electro-polished stainless steel	**Pins:** **P =** Solder cup **X =** Eyelet **C =** Feedthrough **Socket:** **S =** Solder cup **Z =** Eyelet **D =** Feedthrough
	MS27470	DJT14	Jam Nut		
	MS27471	DJT11	Solder		
Series II Non-scoop-proof, bayonet coupling, low silhouette	MS27475	DJL18	Wall	H: Space grade Y: Electro-polished stainless steel	
	MS27476	DJL10	Box		
	MS27477	DJL14	Jam Nut		
	MS27478	DJL11	Solder		
Series III Scoop-proof, triple start, self-locking, threaded coupling	D38999/21	DTS20	Box	H: Space grade N: Nickel plate over stainless steel Y: Electro-polished stainless steel	
	D38999/23	DTS24	Jam Nut		
	D38999/25	DTS21	Solder		
	D38999/27	DTS23	Weld		
Series IV Scoop-proof, breech coupling	D38999/41	DIV40	Box	H: Space Grade N: Nickel plate over stainless steel Y: Electro-polished stainless steel	
	D38999/43	DIV44	Jam Nut		
	D38999/45	DIV41	Solder		

VERSATILE

- Variety of tail and standoff lengths
- Custom extended lengths available
- Choice of finishes

FLEXIBLE

- Contacts available alone or assembled in connectors

PC Tail Contacts and Connectors

TE 38999 connectors are available with PC tail contacts for mounting to pc boards or flex circuits. Alignment disks featured on the high density PCB connectors provide a fitting pattern on the tail side, making installation easier.

PC Contact Part Numbering System

D3 J F A35 P N 1 B W G

BASIC IDENTIFIER
- **D3** Extended Pin 38999-Style Receptacle Connector

MOUNTING STYLE
- **B** Box Mount
- **C** Square Flange with Clinch Nuts
- **D** Double Flange
- **H** Square Flange with Helicoils
- **J** Jam Nut
- **S** Square Flange (Standard)

CLASS
- **F** Aluminum, Nickel Plated
- **G** Aluminum, Nickel Plated, Space Grade
- **J** Composite, Olive Drab Cadmium Plated
- **M** Composite, Nickel Plated
- **T** Aluminum, PTFE Nickel Plated
- **W** Aluminum, Olive Drab Cadmium Plated
- **Z** Aluminum, Black Zinc Nickel Plated

SHELL SIZE
- **A (9), B (11), C (13), D (15), E (17), F (19), G (21), H (23), J (25)**

INSERT ARRANGEMENT
- See Insert Arrangement Table

CONTACT STYLE
- **P** Pin
- **S** Socket

KEYING
- **N** Normal
- **A, B, C, D, E**

EXTENDED TAIL FINISH
- **G** Gold
- **T** Tin/Solder Dip

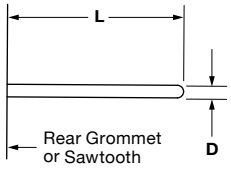

SOLDER LEG DIAMETER (D ±0.001): NO STANDOFFS

	Contact Size			
	Size 22	Size 20	Size 16	Size 12
N	**0.635** 0.025	**1.02** 0.040	**2.03** 0.080	**2.39** 0.094
W	**0.48** 0.019	**0.48** 0.019	**1.02** 0.044	**1.57** 0.062
T	**0.48** 0.019	**0.48** 0.019	**1.57** 0.062	**1.57** 0.062
U	**0.71** 0.028	**0.71** 0.028	**1.57** 0.062	**1.57** 0.062

CONTACT EXTENSION LENGTH (L)
- See Tables

REAR CONFIGURATION
- **1** Epoxy Seal
- **2** Grommet Seal

PC Tail Contacts and Connectors

Jam Nut Receptacles

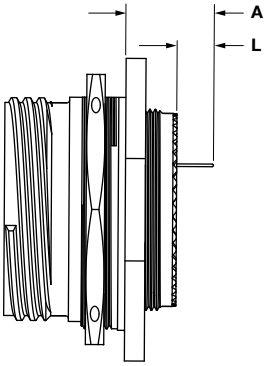

Code	Dim L			Dim A	
	From Grommet	From Sawtooth		From Front of Jam Nut Flange	
	All	Aluminum	Composite	Aluminum	Composite
A	**4.14** 0.163	**4.14** 0.163	**2.92** 0.115	**13.54** 0.533	**13.74** 0.541
B	**5.33** 0.210	**5.33** 0.210	**4.11** 0.162	**14.73** 0.580	**14.94** 0.588
C	**5.84** 0.230	**5.84** 0.230	**4.62** 0.182	**15.24** 0.600	**15.44** 0.608
D	**6.76** 0.266	**6.76** 0.266	**5.54** 0.218	**16.05** 0.632	**16.36** 0.644
E	**7.98** 0.314	**7.98** 0.314	**6.50** 0.256	**17.37** 0.684	**17.32** 0.682

Millimeters Inches

Square Flange Receptacles

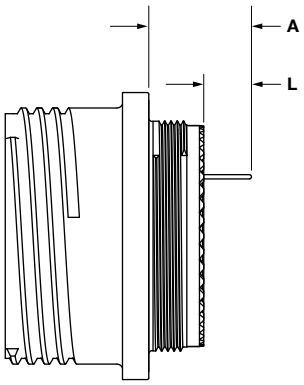

Code	Dim L			Dim A			
	From Grommet	From Sawtooth		Distance from Square Flange			
				Shell Sizes 9–19		Shell Sizes 21–25	
	All	Aluminum	Composite	Aluminum	Composite	Aluminum	Composite
A	**4.14** 0.163	**4.42** 0.174	**3.94** 0.155	**13.97** 0.550	**13.11** 0.516	**13.39** 0.527	**13.11** 0.516
B	**5.33** 0.210	**5.61** 0.221	**5.13** 0.202	**15.16** 0.597	**14.30** 0.563	**14.58** 0.574	**14.30** 0.563
C	**5.84** 0.230	**6.12** 0.241	**5.64** 0.222	**15.67** 0.617	**14.81** 0.583	**15.09** 0.594	**14.81** 0.583
D	**6.76** 0.266	**7.04** 0.277	**6.55** 0.258	**16.59** 0.653	**15.72** 0.619	**16.00** 0.630	**15.72** 0.619
E	**7.98** 0.314	**8.26** 0.325	**7.77** 0.306	**17.81** 0.701	**16.94** 0.667	**17.22** 0.678	**16.94** 0.667

Millimeters Inches

PC Tail Contacts and Connectors

Box Mount Receptacles

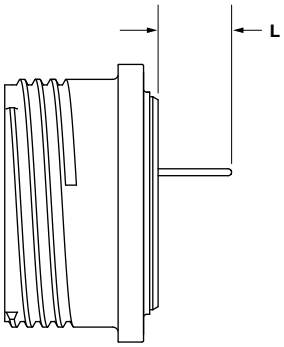

Code	Dim L
A	**9.78** 0.385
D	**12.40** 0.488
J	**7.67** 0.302

Millimeters Inches
Only epoxy seal (1) available for Box Mount Receptacles

Double Flange Receptacles

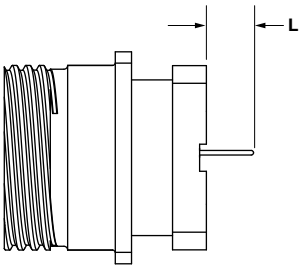

Code	Dim L
E	**1.68** 0.066
F	**2.97** 0.117
G	**4.62** 0.182
H	**5.64** 0.222

Millimeters Inches

9-06/9-35

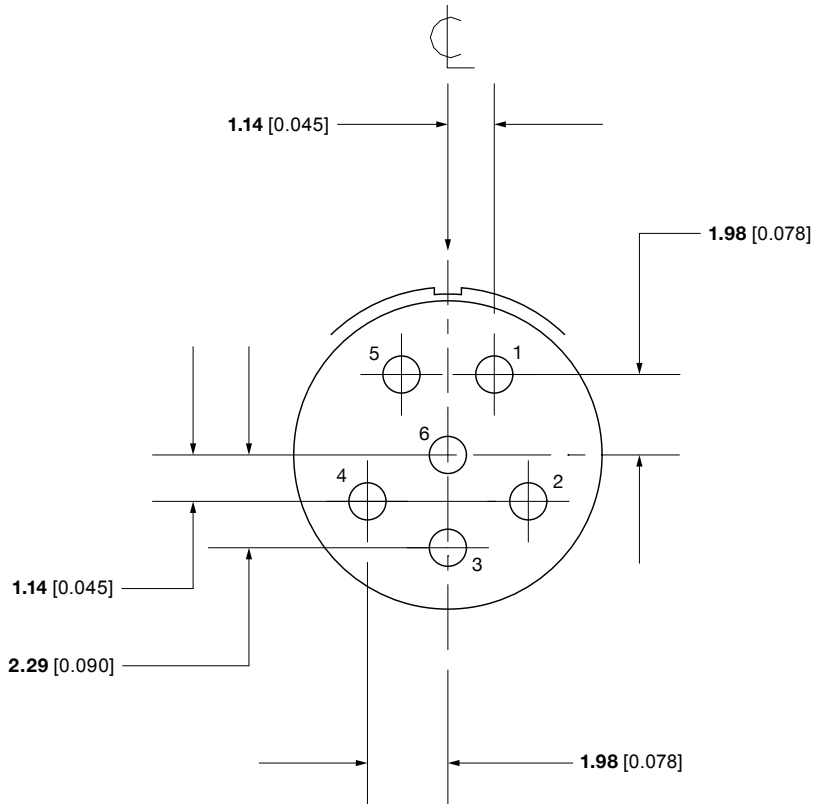

9-44

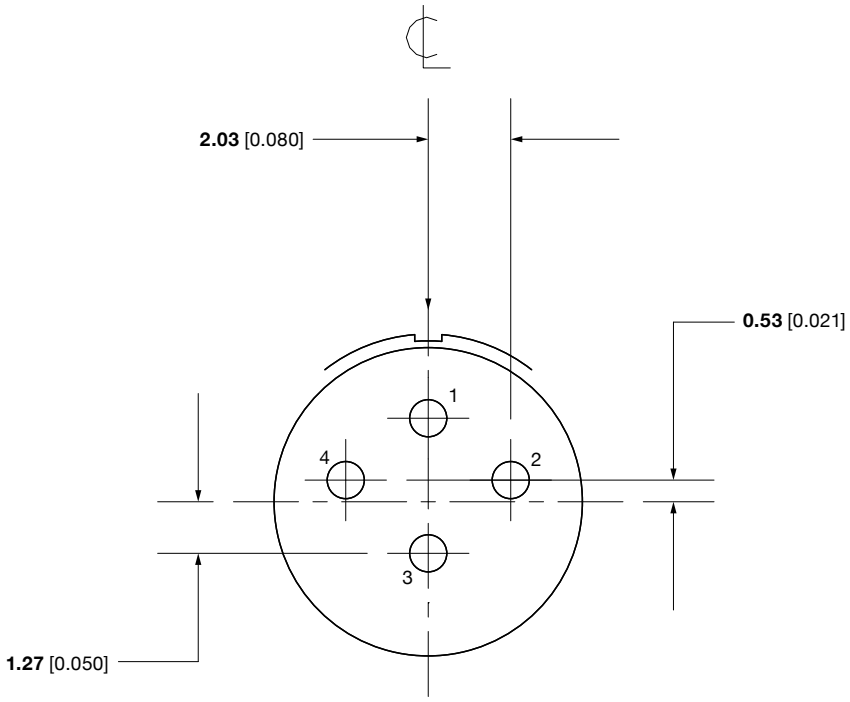

9-44

9-98

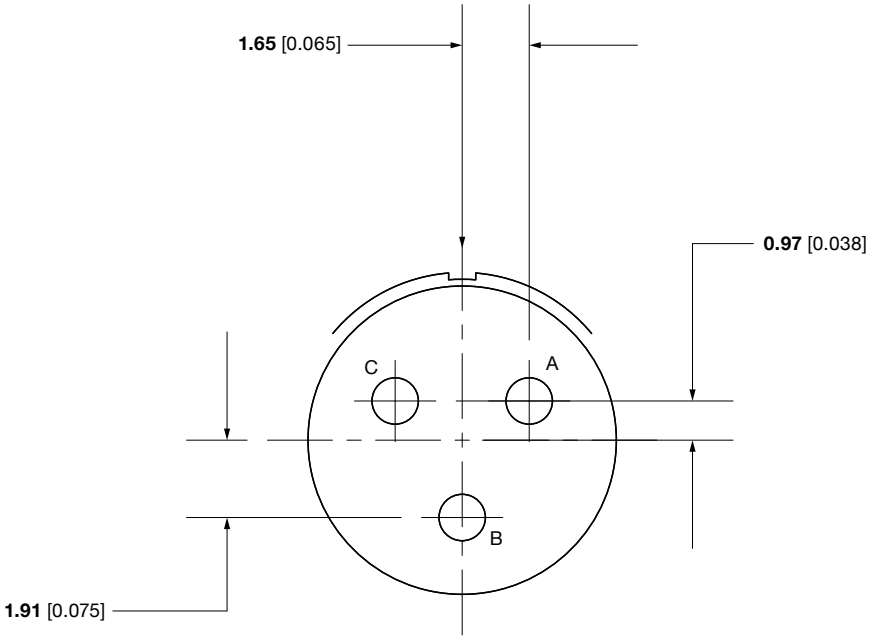

9-98

11-02

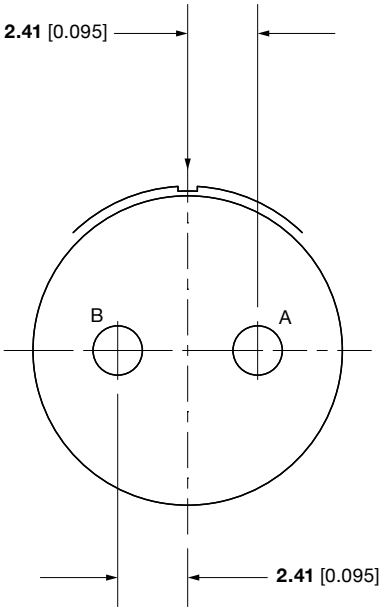

11-04

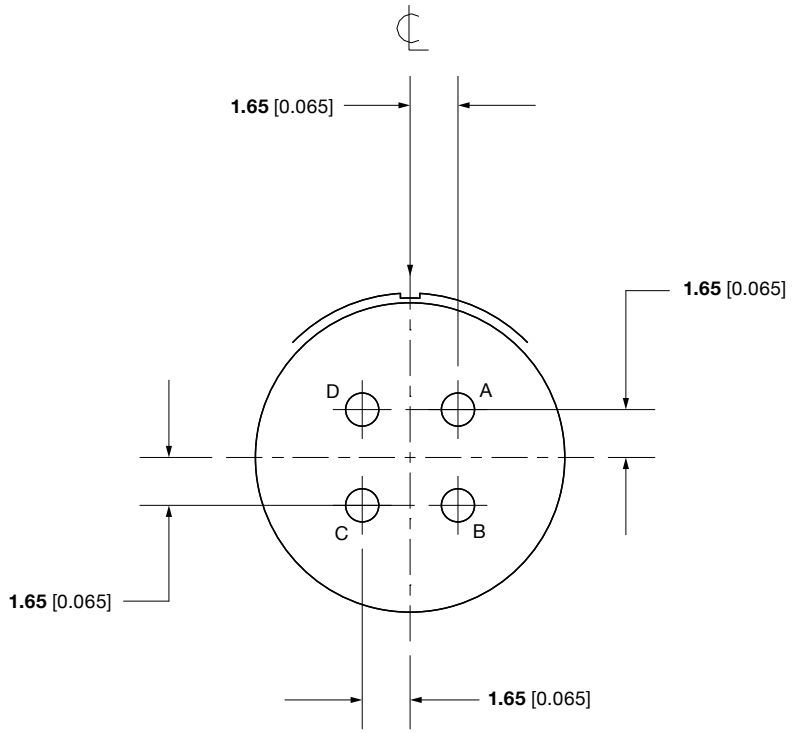
1.65 [0.065]
1.65 [0.065]
D
A
C
B
1.65 [0.065]
1.65 [0.065]

11-05

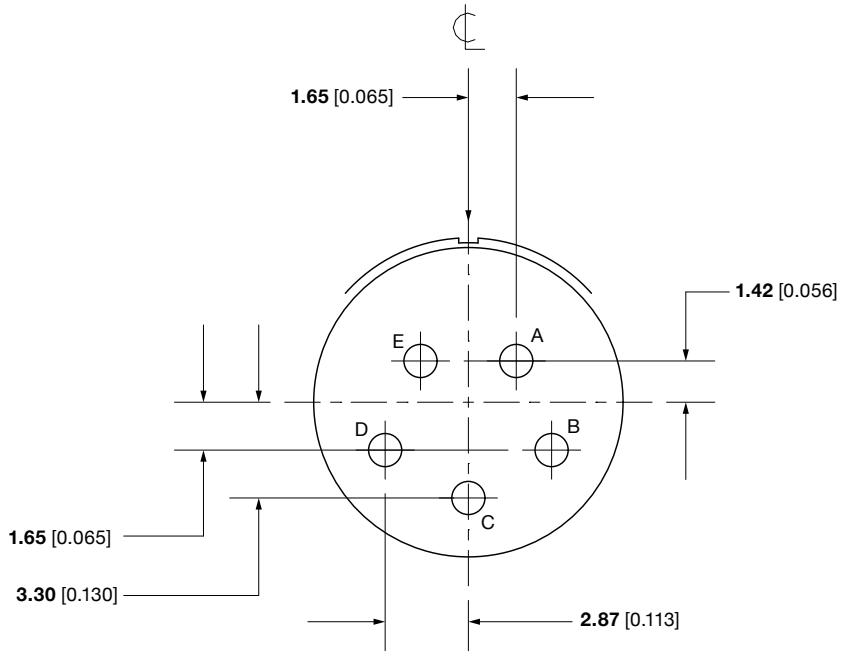
1.65 [0.065]
1.42 [0.056]
E
A
D
B
C
1.65 [0.065]
3.30 [0.130]
2.87 [0.113]

11-13/11-35

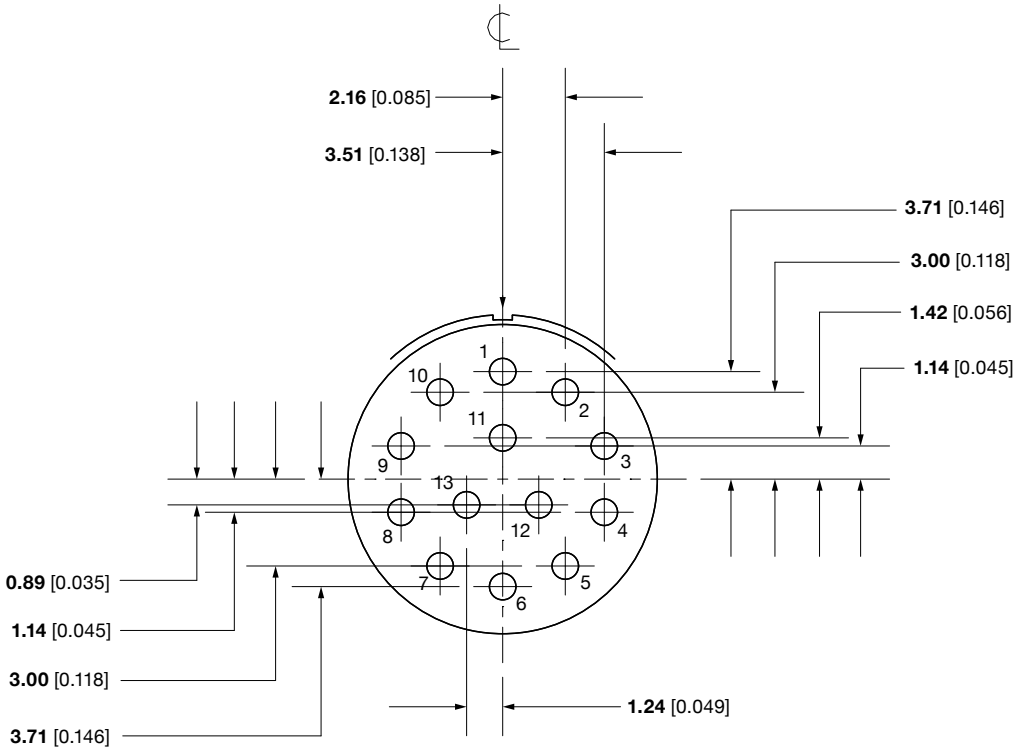

11-98

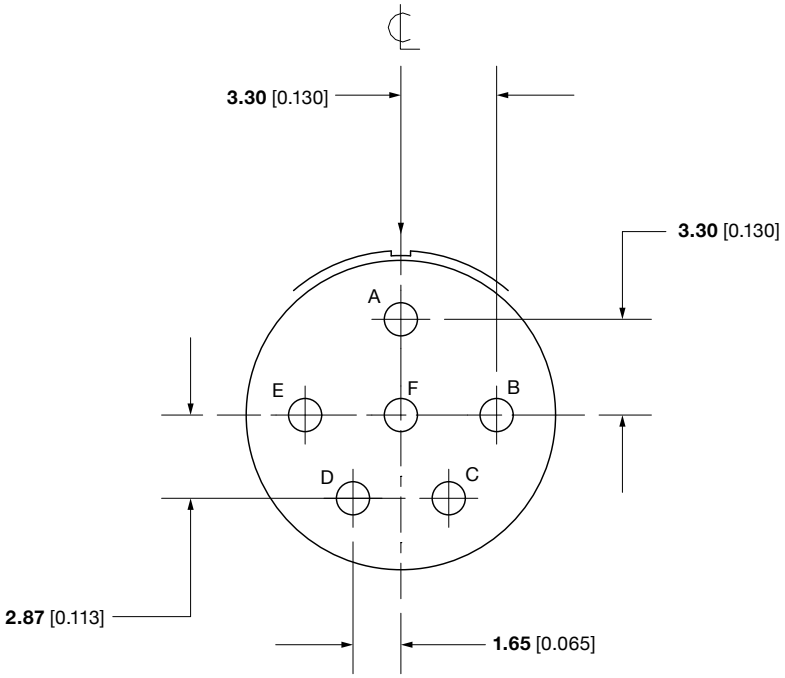

11-99

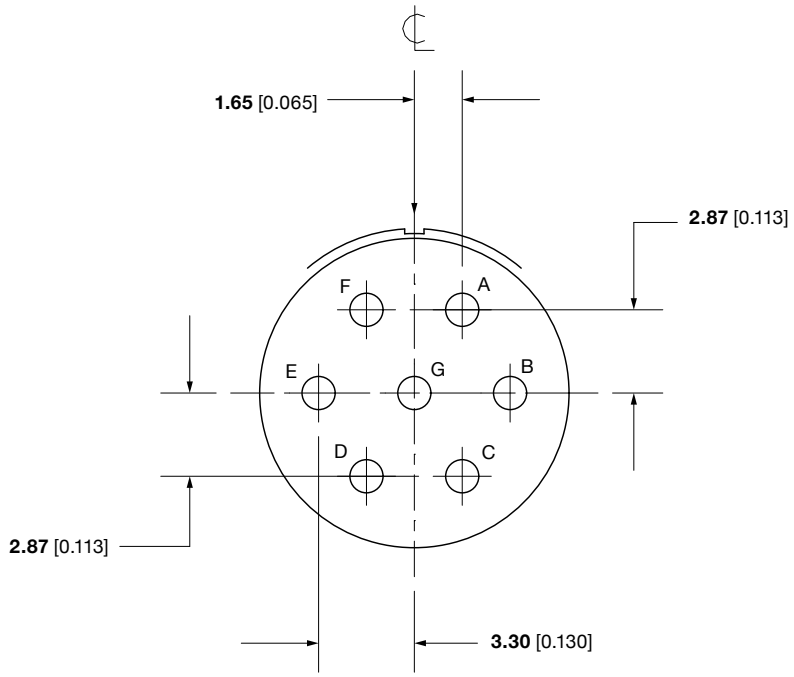
1.65 [0.065]
2.87 [0.113]
F
A
E
G
B
D
C
2.87 [0.113]
3.30 [0.130]

13-04

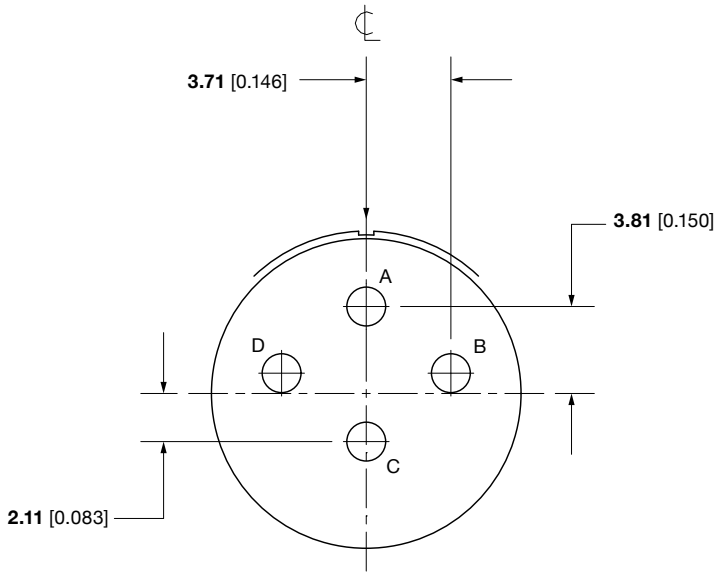
3.71 [0.146]
3.81 [0.150]
A
D
B
C
2.11 [0.083]

13-08

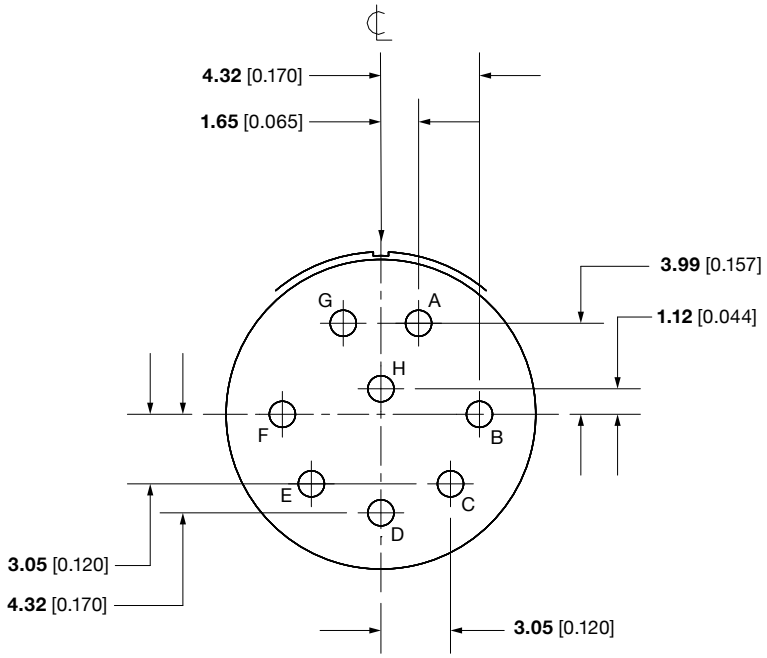

13-22/13-35

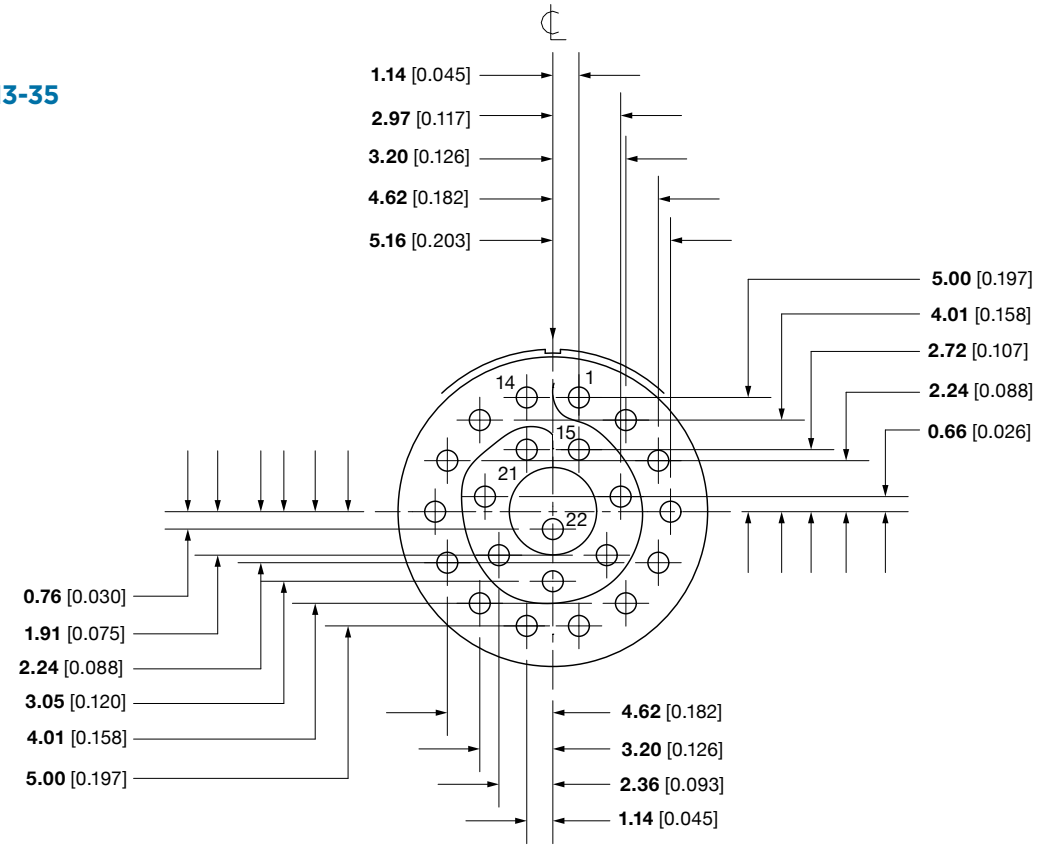

13-98

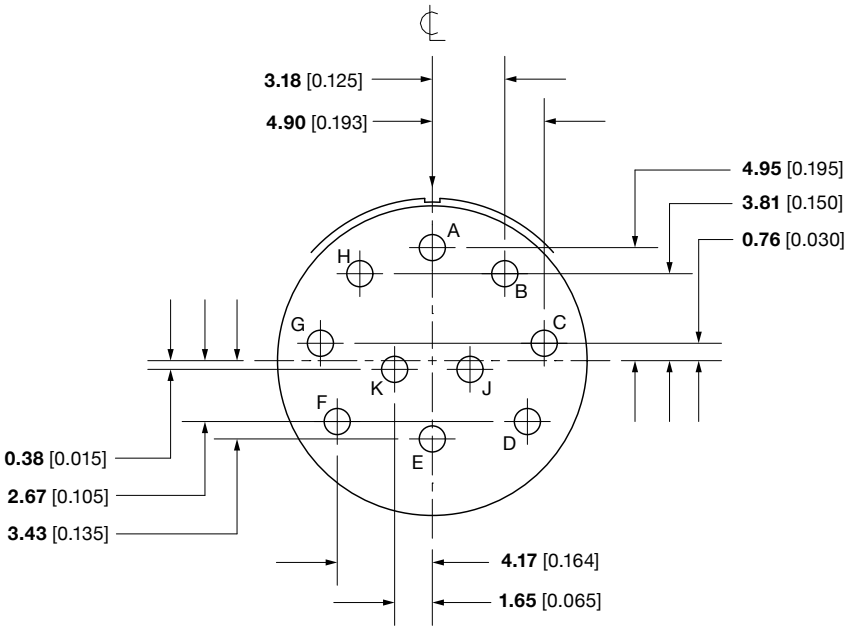
3.18 [0.125]
4.90 [0.193]
4.95 [0.195]
3.81 [0.150]
0.76 [0.030]
A
B
C
D
E
F
G
H
J
K
0.38 [0.015]
2.67 [0.105]
3.43 [0.135]
4.17 [0.164]
1.65 [0.065]

15-05

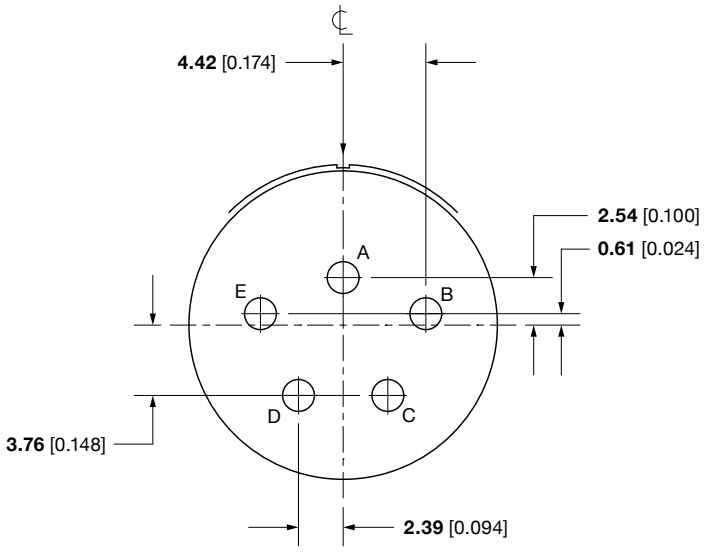
4.42 [0.174]
2.54 [0.100]
0.61 [0.024]
A
B
C
D
E
3.76 [0.148]
2.39 [0.094]

15-15

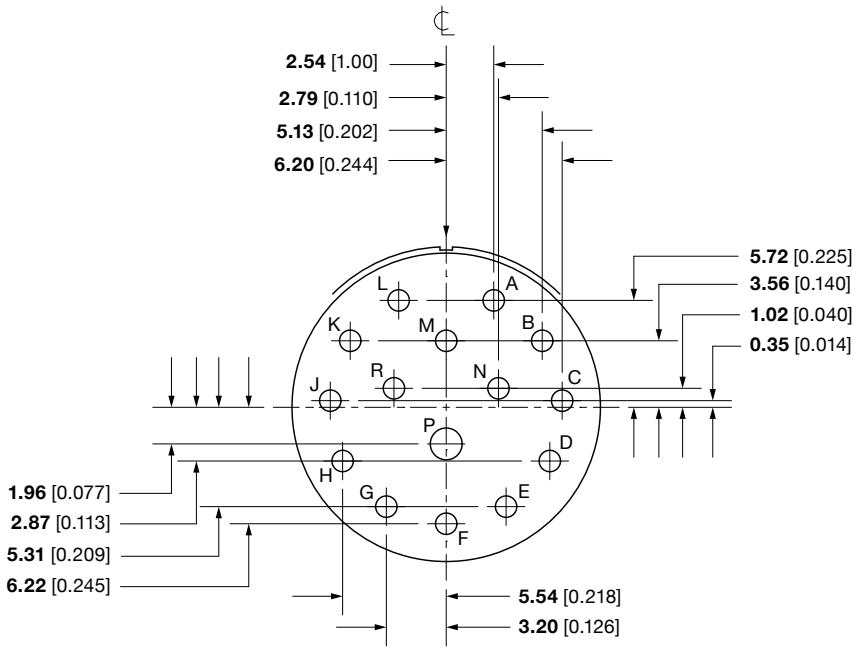
2.54 [1.00]
2.79 [0.110]
5.13 [0.202]
6.20 [0.244]
5.72 [0.225]
3.56 [0.140]
1.02 [0.040]
0.35 [0.014]
L
A
K
M
B
R
N
C
J
P
D
H
G
E
F
1.96 [0.077]
2.87 [0.113]
5.31 [0.209]
6.22 [0.245]
5.54 [0.218]
3.20 [0.126]

15-18

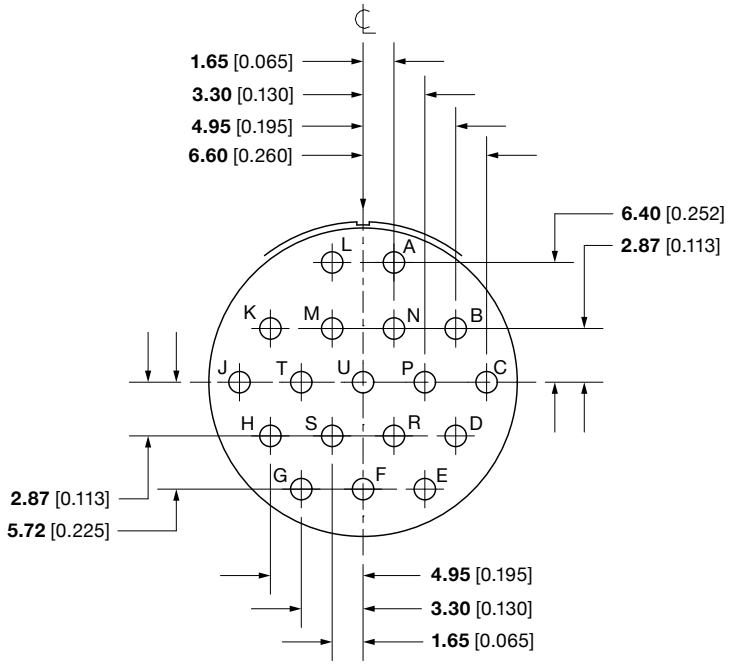
1.65 [0.065]
3.30 [0.130]
4.95 [0.195]
6.60 [0.260]
6.40 [0.252]
2.87 [0.113]
L
A
K
M
N
B
J
T
U
P
C
H
S
R
D
G
F
E
2.87 [0.113]
5.72 [0.225]
4.95 [0.195]
3.30 [0.130]
1.65 [0.065]

15-19

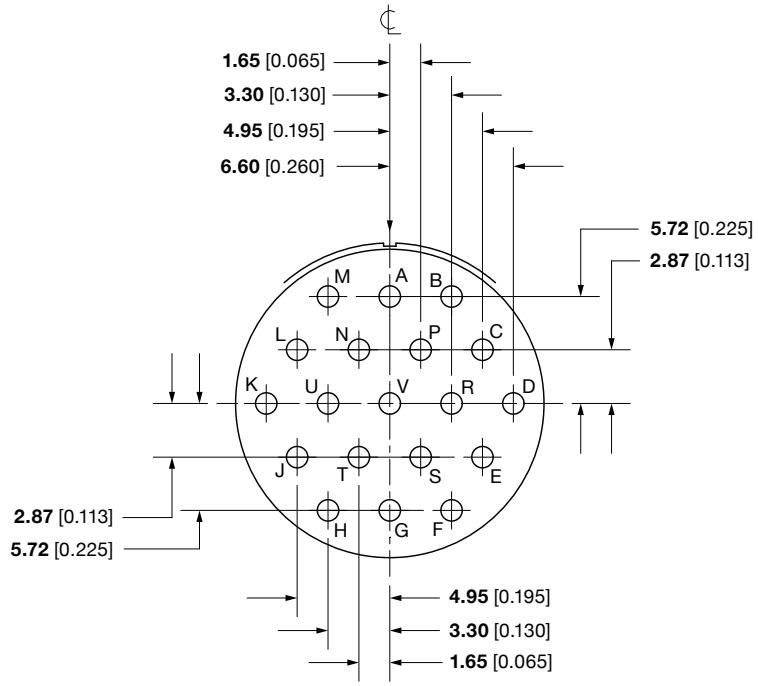

15-35/15-37

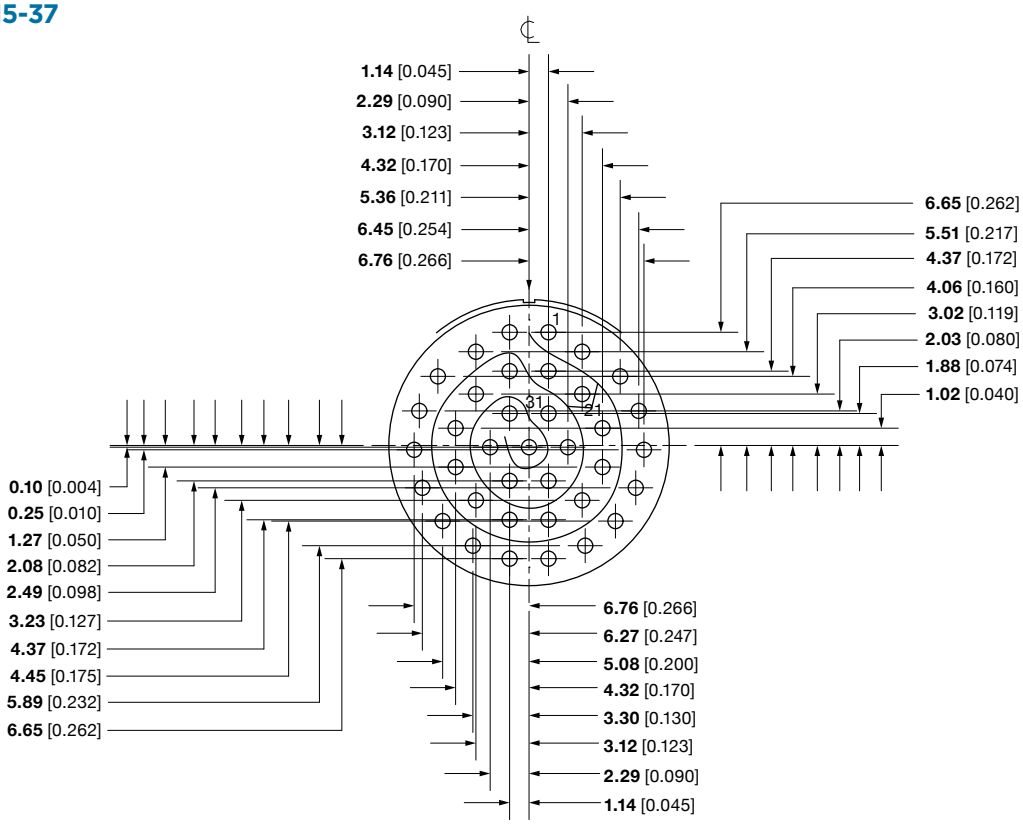

15-35

15-97

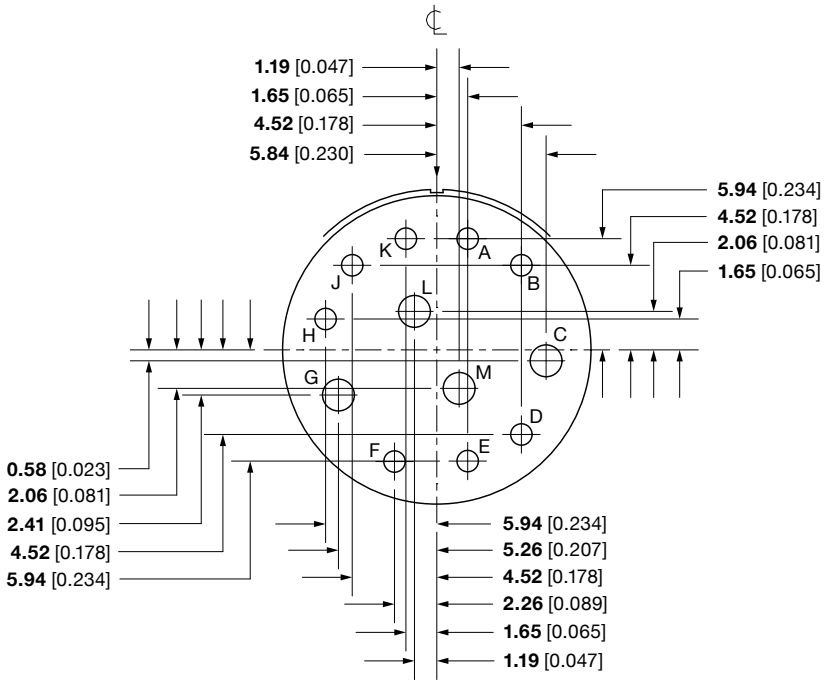

17-06

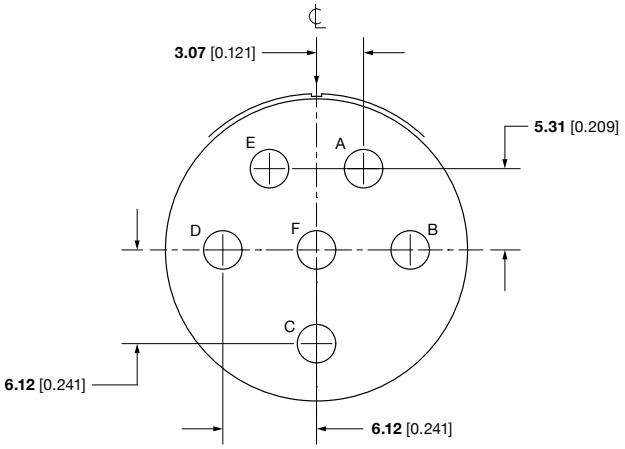

N/A

17-08

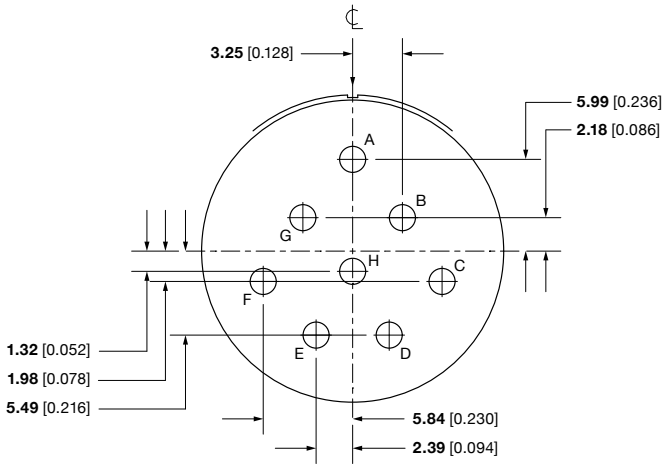

17-26

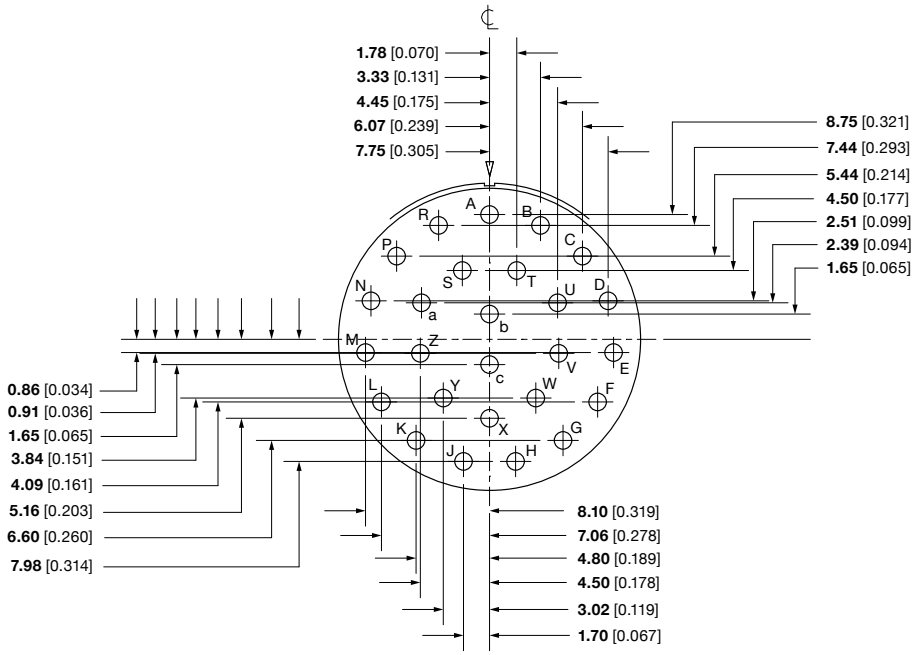

17-35/17-55

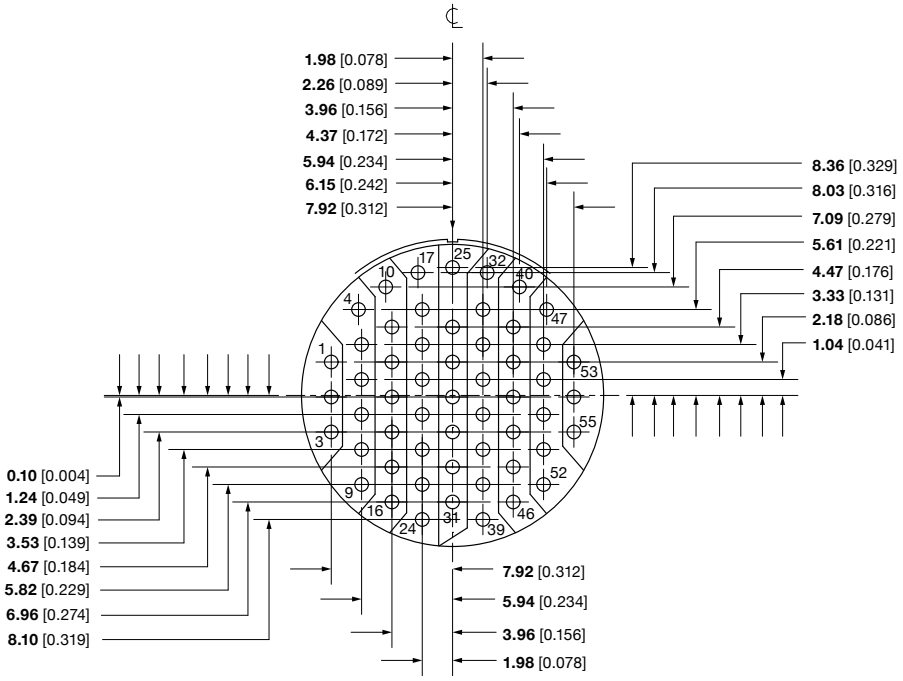

17-99

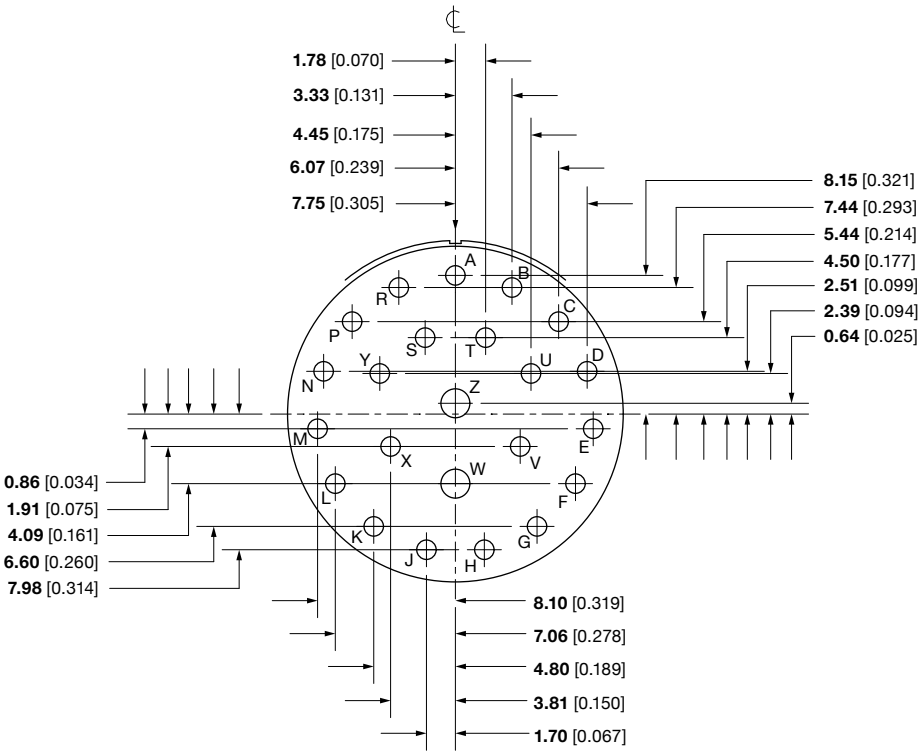
1.78 [0.070]
3.33 [0.131]
4.45 [0.175]
6.07 [0.239]
7.75 [0.305]
8.15 [0.321]
7.44 [0.293]
5.44 [0.214]
4.50 [0.177]
2.51 [0.099]
2.39 [0.094]
0.64 [0.025]
0.86 [0.034]
1.91 [0.075]
4.09 [0.161]
6.60 [0.260]
7.98 [0.314]
8.10 [0.319]
7.06 [0.278]
4.80 [0.189]
3.81 [0.150]
1.70 [0.067]
A
B
C
D
E
F
G
H
J
K
L
M
N
P
R
S
T
U
V
W
X
Y
Z

19-11

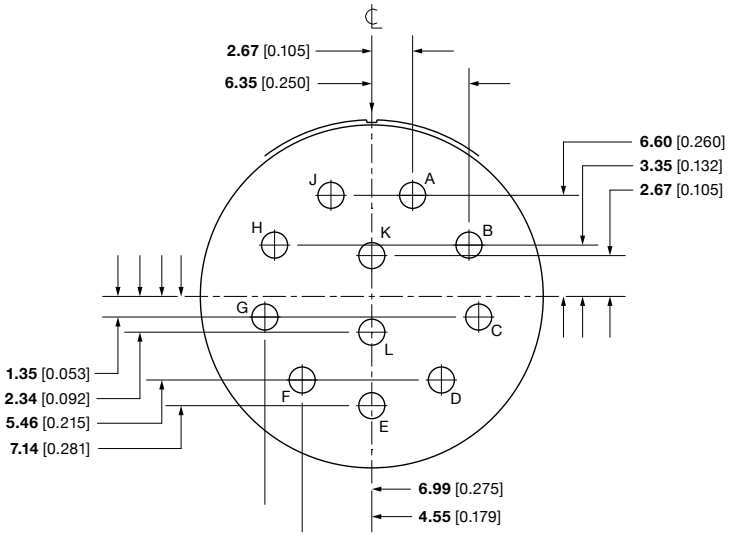
2.67 [0.105]
6.35 [0.250]
6.60 [0.260]
3.35 [0.132]
2.67 [0.105]
1.35 [0.053]
2.34 [0.092]
5.46 [0.215]
7.14 [0.281]
6.99 [0.275]
4.55 [0.179]
A
B
C
D
E
F
G
H
J
K
L

19-28

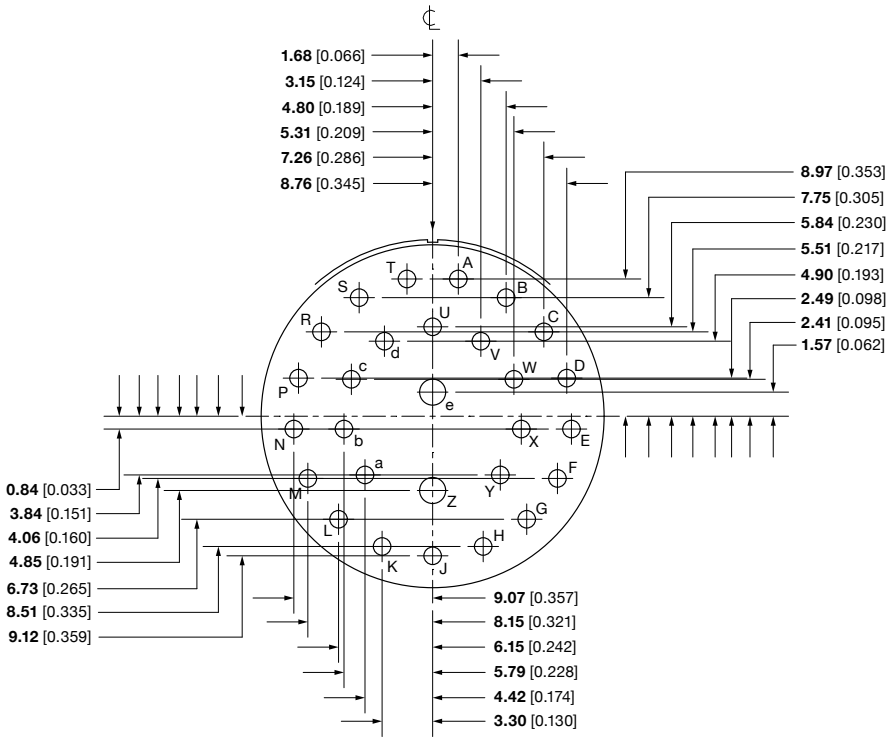
1.68 [0.066]
3.15 [0.124]
4.80 [0.189]
5.31 [0.209]
7.26 [0.286]
8.76 [0.345]
8.97 [0.353]
7.75 [0.305]
5.84 [0.230]
5.51 [0.217]
4.90 [0.193]
2.49 [0.098]
2.41 [0.095]
1.57 [0.062]
0.84 [0.033]
3.84 [0.151]
4.06 [0.160]
4.85 [0.191]
6.73 [0.265]
8.51 [0.335]
9.12 [0.359]
9.07 [0.357]
8.15 [0.321]
6.15 [0.242]
5.79 [0.228]
4.42 [0.174]
3.30 [0.130]

19-30

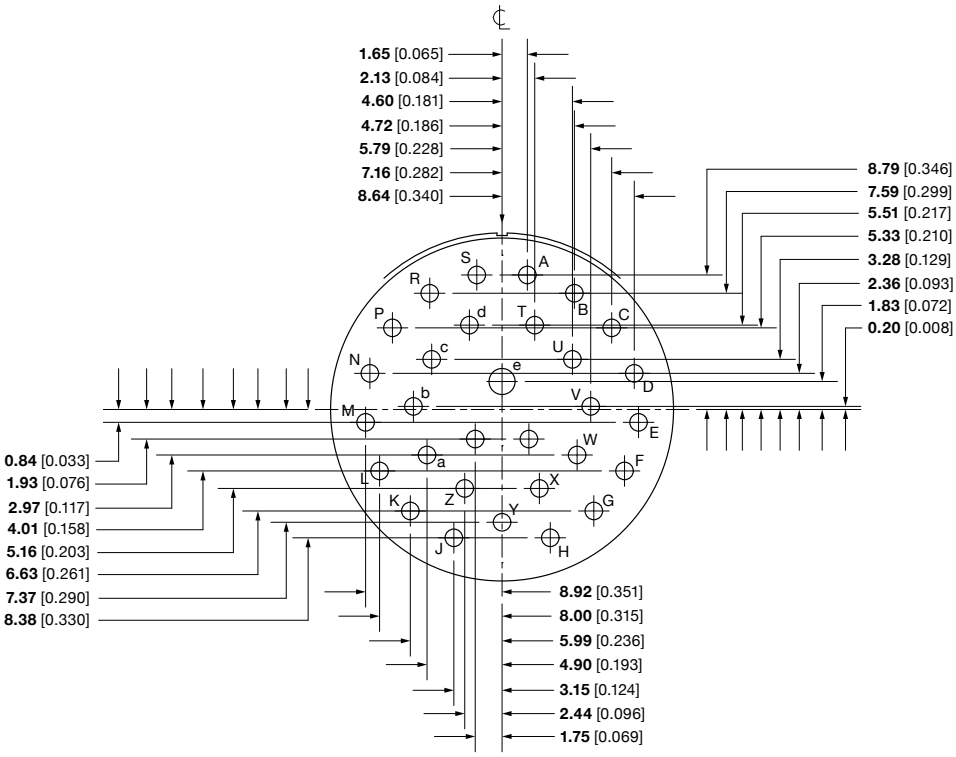
1.65 [0.065]
2.13 [0.084]
4.60 [0.181]
4.72 [0.186]
5.79 [0.228]
7.16 [0.282]
8.64 [0.340]
8.79 [0.346]
7.59 [0.299]
5.51 [0.217]
5.33 [0.210]
3.28 [0.129]
2.36 [0.093]
1.83 [0.072]
0.20 [0.008]
0.84 [0.033]
1.93 [0.076]
2.97 [0.117]
4.01 [0.158]
5.16 [0.203]
6.63 [0.261]
7.37 [0.290]
8.38 [0.330]
8.92 [0.351]
8.00 [0.315]
5.99 [0.236]
4.90 [0.193]
3.15 [0.124]
2.44 [0.096]
1.75 [0.069]

19-32

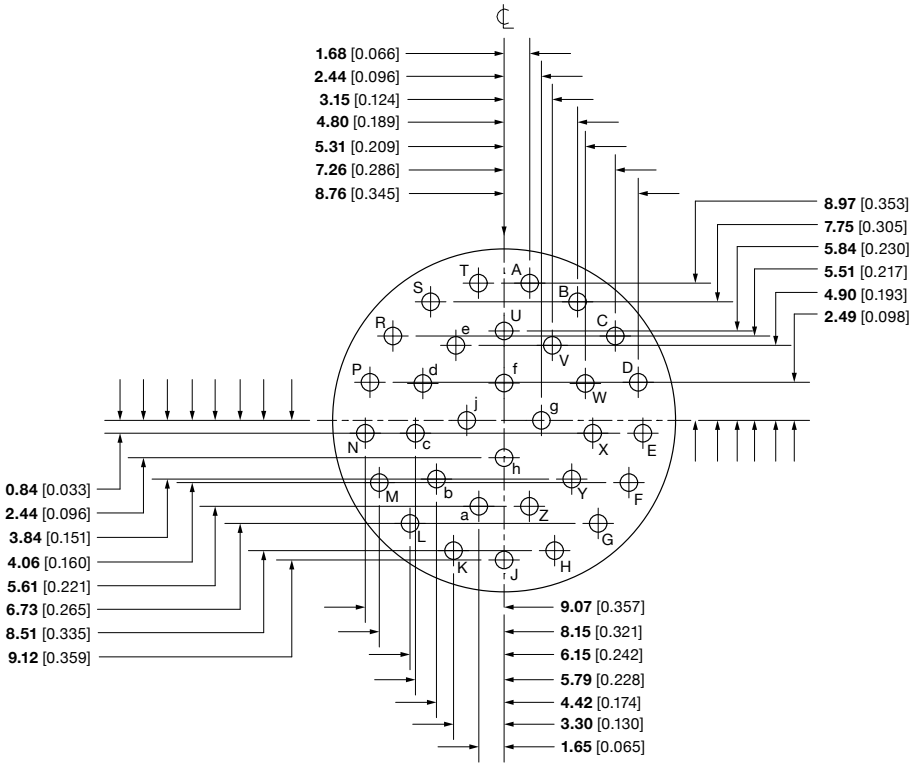

19-35/19-66

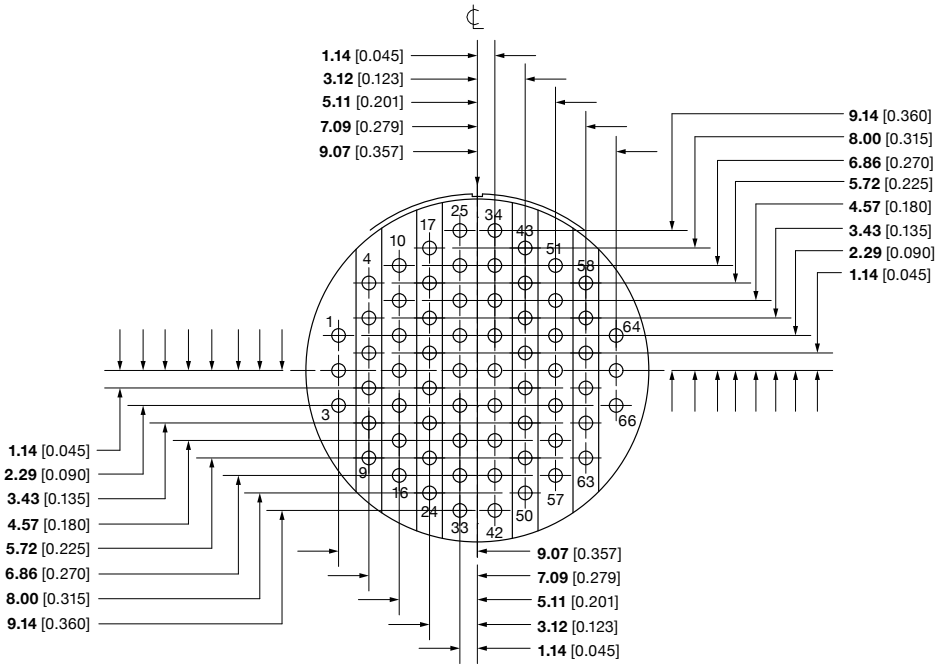

19-45

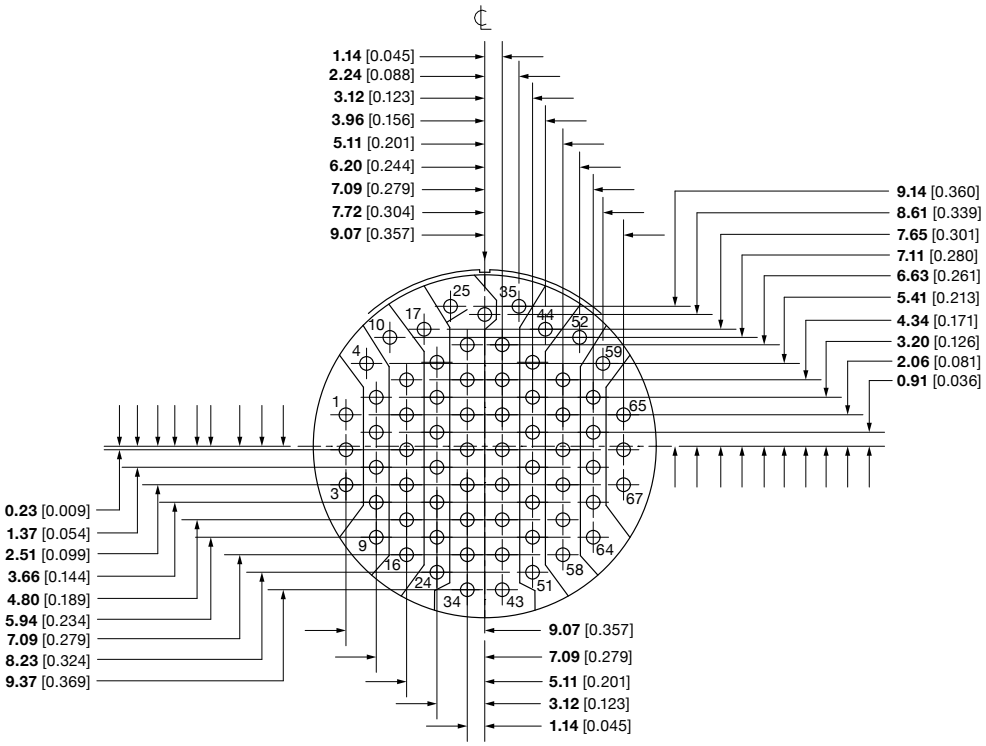
1.14 [0.045]
2.24 [0.088]
3.12 [0.123]
3.96 [0.156]
5.11 [0.201]
6.20 [0.244]
7.09 [0.279]
7.72 [0.304]
9.07 [0.357]
9.14 [0.360]
8.61 [0.339]
7.65 [0.301]
7.11 [0.280]
6.63 [0.261]
5.41 [0.213]
4.34 [0.171]
3.20 [0.126]
2.06 [0.081]
0.91 [0.036]
0.23 [0.009]
1.37 [0.054]
2.51 [0.099]
3.66 [0.144]
4.80 [0.189]
5.94 [0.234]
7.09 [0.279]
8.23 [0.324]
9.37 [0.369]
9.07 [0.357]
7.09 [0.279]
5.11 [0.201]
3.12 [0.123]
1.14 [0.045]

21-11

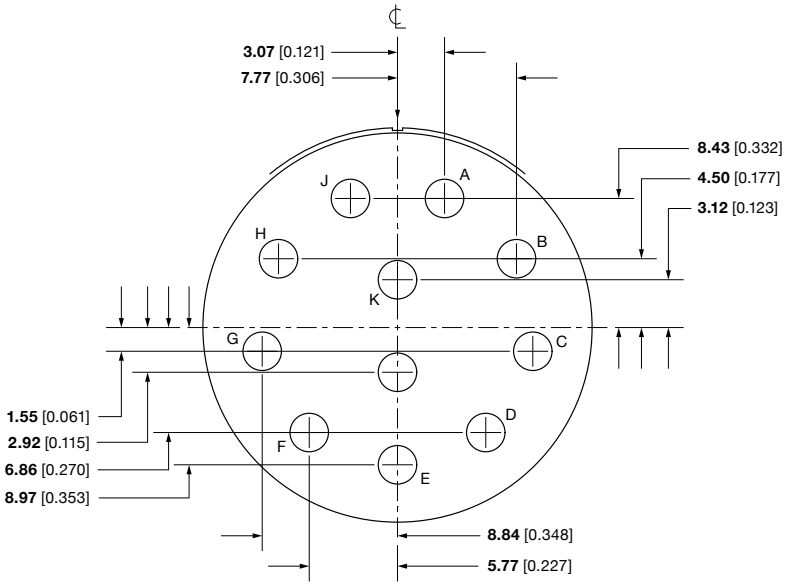
3.07 [0.121]
7.77 [0.306]
8.43 [0.332]
4.50 [0.177]
3.12 [0.123]
1.55 [0.061]
2.92 [0.115]
6.86 [0.270]
8.97 [0.353]
8.84 [0.348]
5.77 [0.227]

21-16

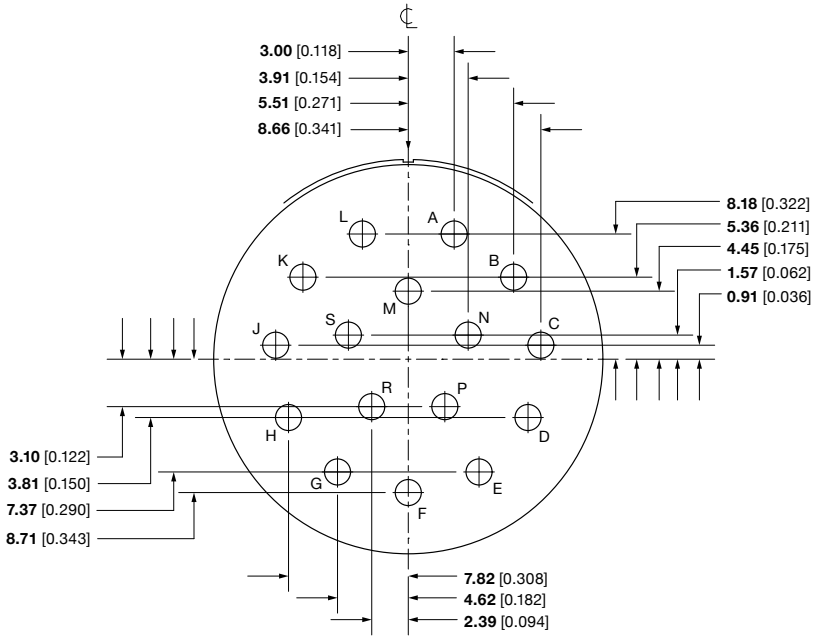
3.00 [0.118]
3.91 [0.154]
5.51 [0.271]
8.66 [0.341]
8.18 [0.322]
5.36 [0.211]
4.45 [0.175]
1.57 [0.062]
0.91 [0.036]
L
A
K
B
M
S
N
J
C
R
P
H
D
G
E
F
3.10 [0.122]
3.81 [0.150]
7.37 [0.290]
8.71 [0.343]
7.82 [0.308]
4.62 [0.182]
2.39 [0.094]

21-24

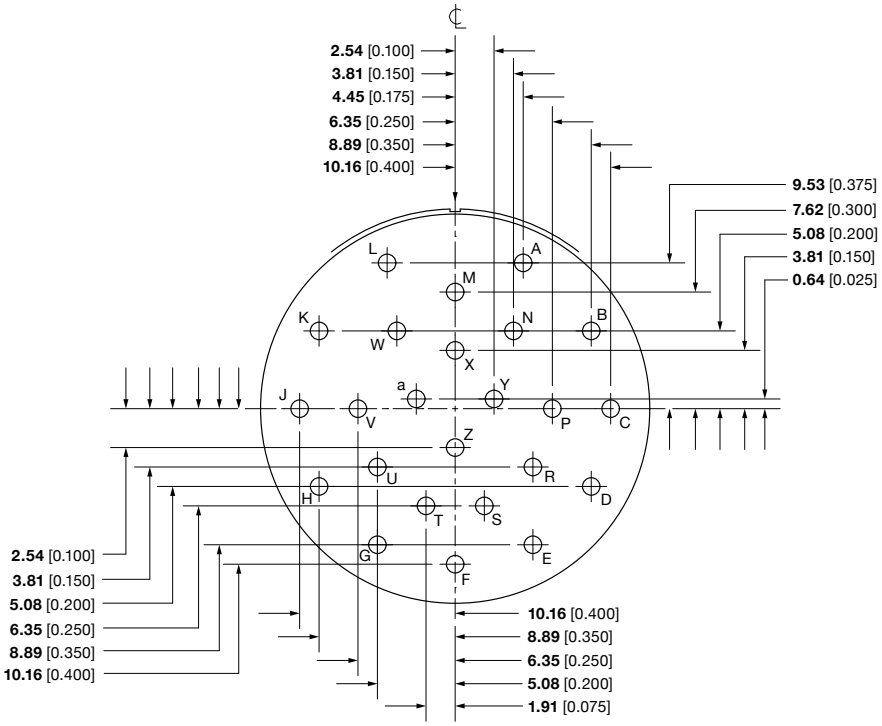
2.54 [0.100]
3.81 [0.150]
4.45 [0.175]
6.35 [0.250]
8.89 [0.350]
10.16 [0.400]
9.53 [0.375]
7.62 [0.300]
5.08 [0.200]
3.81 [0.150]
0.64 [0.025]
L
A
M
K
N
B
W
X
a
Y
J
V
P
C
Z
U
R
H
D
T
S
G
E
F
2.54 [0.100]
3.81 [0.150]
5.08 [0.200]
6.35 [0.250]
8.89 [0.350]
10.16 [0.400]
10.16 [0.400]
8.89 [0.350]
6.35 [0.250]
5.08 [0.200]
1.91 [0.075]

N/A

21-25

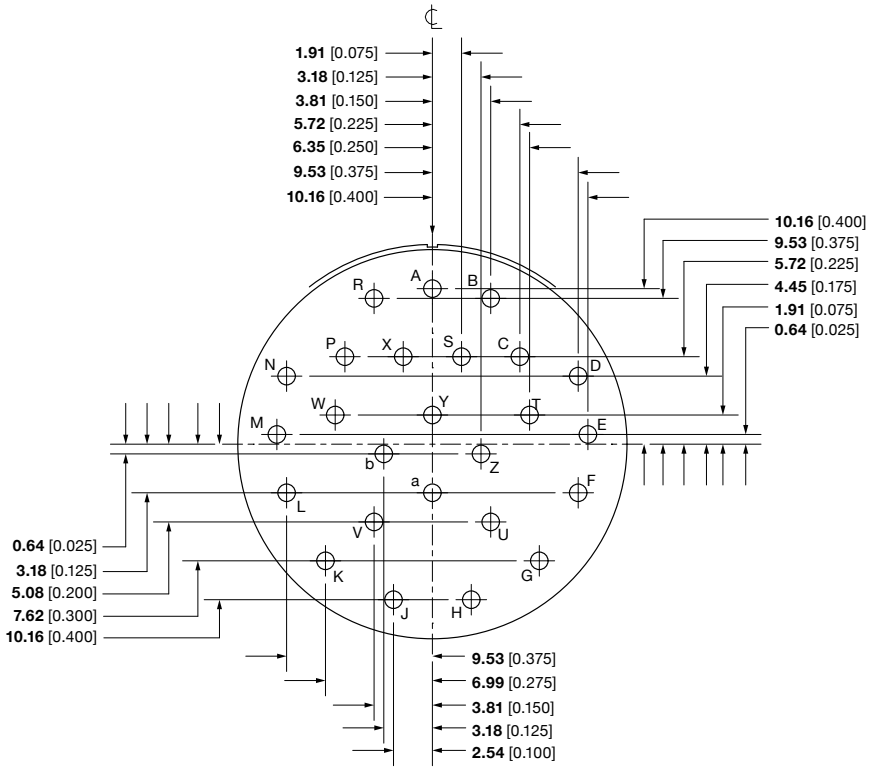
1.91 [0.075]
3.18 [0.125]
3.81 [0.150]
5.72 [0.225]
6.35 [0.250]
9.53 [0.375]
10.16 [0.400]
10.16 [0.400]
9.53 [0.375]
5.72 [0.225]
4.45 [0.175]
1.91 [0.075]
0.64 [0.025]
R
A
B
P
X
S
C
N
D
W
Y
T
M
E
b
Z
a
F
L
V
U
K
G
J
H
0.64 [0.025]
3.18 [0.125]
5.08 [0.200]
7.62 [0.300]
10.16 [0.400]
9.53 [0.375]
6.99 [0.275]
3.81 [0.150]
3.18 [0.125]
2.54 [0.100]

N/A

21-27

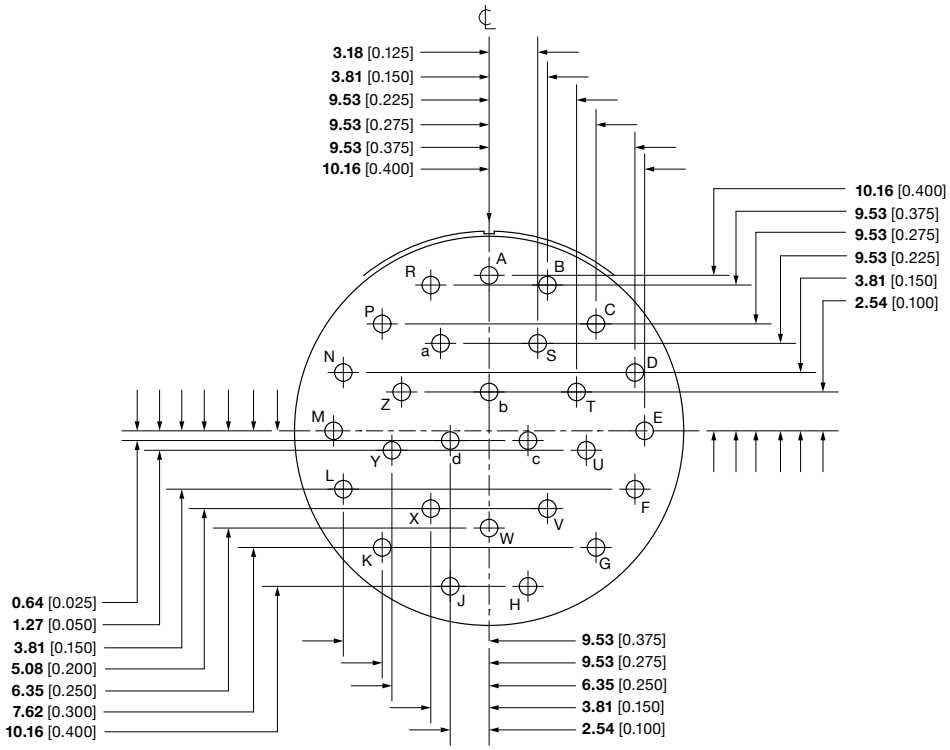
3.18 [0.125]
3.81 [0.150]
9.53 [0.225]
9.53 [0.275]
9.53 [0.375]
10.16 [0.400]
10.16 [0.400]
9.53 [0.375]
9.53 [0.275]
9.53 [0.225]
3.81 [0.150]
2.54 [0.100]
R
A
B
P
C
a
S
N
D
Z
b
T
M
E
Y
d
c
U
L
F
X
V
W
K
G
J
H
0.64 [0.025]
1.27 [0.050]
3.81 [0.150]
5.08 [0.200]
6.35 [0.250]
7.62 [0.300]
10.16 [0.400]
9.53 [0.375]
9.53 [0.275]
6.35 [0.250]
3.81 [0.150]
2.54 [0.100]

21-01/21-35

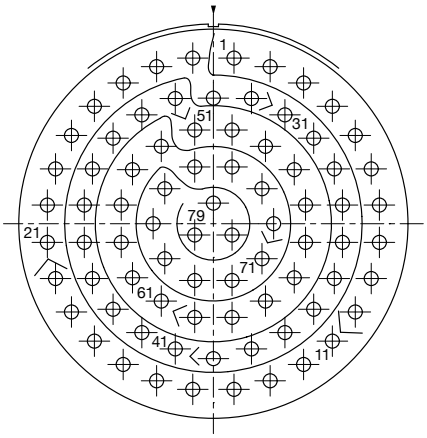

Contact Position	Location	
	X Axis	Y Axis
1	+0.053	+0.426
2	+0.146	+0.404
3	+0.232	+0.362
4	+0.306	+0.302
5	+0.365	+0.227
6	+0.406	+0.141
7	+0.427	+0.048
8	+0.427	-0.048
9	+0.406	-0.141
10	+0.365	-0.227
11	+0.306	-0.302
12	+0.232	-0.362
13	+0.146	-0.404
14	+0.053	-0.426
15	-0.053	-0.426
16	-0.146	-0.404
17	-0.232	-0.362
18	-0.306	-0.302
19	-0.365	-0.227
20	-0.406	-0.141
21	-0.427	-0.048
22	-0.427	+0.048
23	-0.406	+0.141
24	-0.365	+0.227
25	-0.306	+0.302
26	-0.232	+0.362
27	-0.146	+0.404

Contact Position	Location	
	X Axis	Y Axis
28	-0.053	+0.426
29	+0.000	+0.323
30	+0.098	+0.322
31	+0.184	+0.280
32	+0.258	+0.220
33	+0.311	+0.141
34	+0.332	+0.048
35	+0.332	-0.048
36	+0.311	-0.141
37	+0.258	-0.220
38	+0.184	-0.280
39	+0.098	-0.322
40	+0.000	-0.347
41	-0.098	-0.322
42	-0.184	-0.280
43	-0.258	-0.220
44	-0.311	-0.141
45	-0.332	-0.048
46	-0.332	+0.048
47	-0.311	+0.141
48	-0.258	+0.220
49	-0.184	+0.280
50	-0.098	+0.322
51	-0.048	+0.241
52	+0.048	+0.241
53	+0.134	+0.199
54	+0.208	+0.139

Contact Position	Location	
	X Axis	Y Axis
55	+0.237	+0.048
56	+0.237	-0.048
57	+0.208	-0.139
58	+0.134	-0.199
59	+0.048	-0.241
60	-0.048	-0.241
61	-0.134	-0.199
62	-0.208	-0.139
63	-0.237	-0.048
64	-0.237	+0.048
65	-0.208	+0.139
66	-0.134	+0.199
67	-0.048	+0.146
68	+0.048	+0.146
69	+0.125	+0.090
70	+0.155	+0.000
71	+0.125	-0.090
72	+0.048	-0.146
73	-0.048	-0.146
74	-0.125	-0.090
75	-0.155	-0.000
76	-0.125	+0.090
77	+0.000	+0.053
78	+0.048	-0.029
79	-0.048	-0.029
—	—	—

21-39

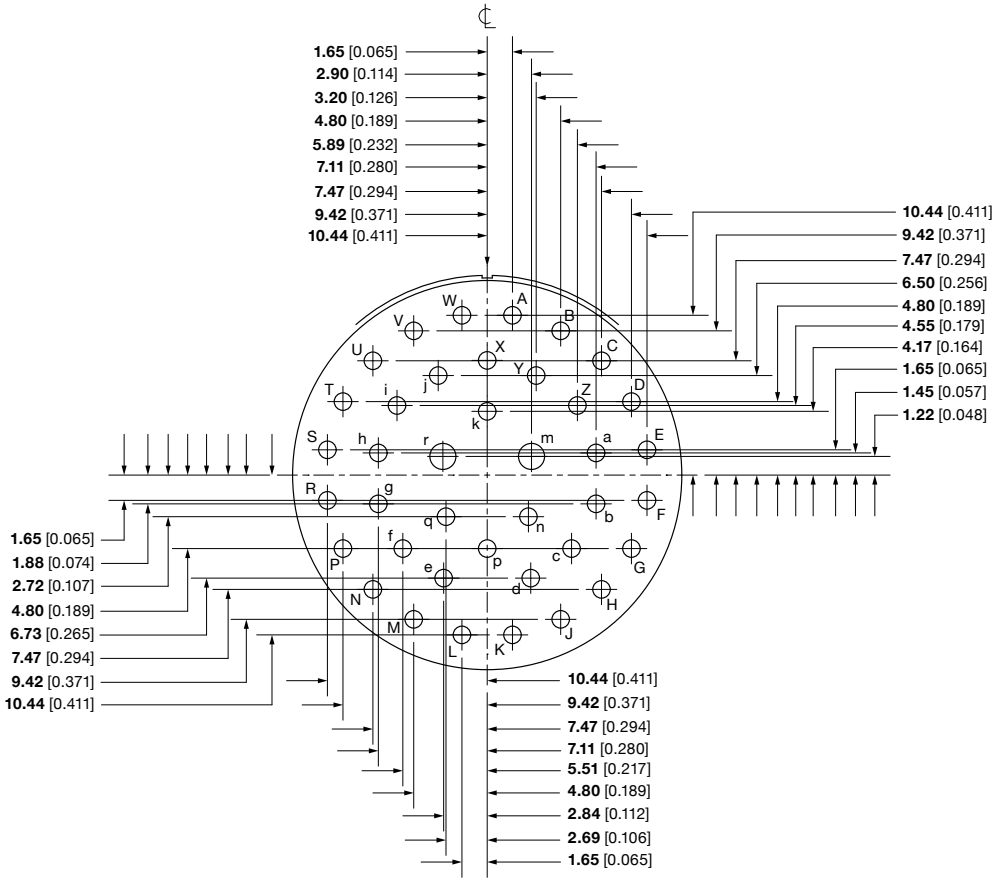
1.65 [0.065]
2.90 [0.114]
3.20 [0.126]
4.80 [0.189]
5.89 [0.232]
7.11 [0.280]
7.47 [0.294]
9.42 [0.371]
10.44 [0.411]
10.44 [0.411]
9.42 [0.371]
7.47 [0.294]
6.50 [0.256]
4.80 [0.189]
4.55 [0.179]
4.17 [0.164]
1.65 [0.065]
1.45 [0.057]
1.22 [0.048]
1.65 [0.065]
1.88 [0.074]
2.72 [0.107]
4.80 [0.189]
6.73 [0.265]
7.47 [0.294]
9.42 [0.371]
10.44 [0.411]
10.44 [0.411]
9.42 [0.371]
7.47 [0.294]
7.11 [0.280]
5.51 [0.217]
4.80 [0.189]
2.84 [0.112]
2.69 [0.106]
1.65 [0.065]

21-41

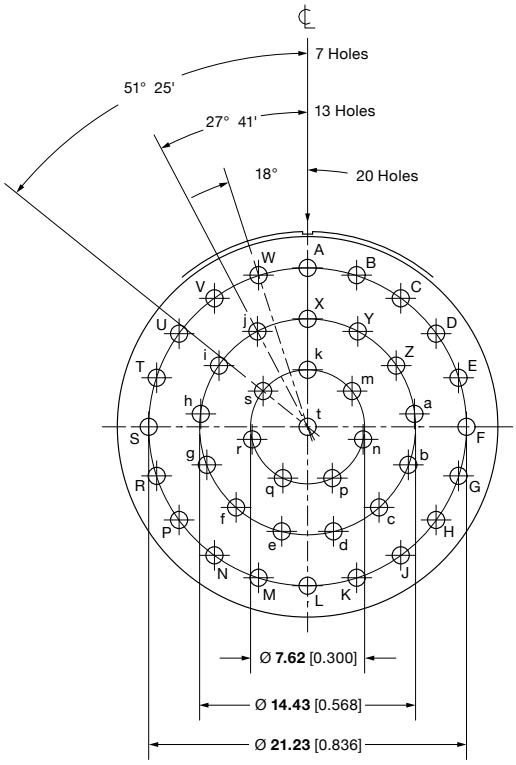
7 Holes
51° 25'
13 Holes
27° 41'
18°
20 Holes
Ø 7.62 [0.300]
Ø 14.43 [0.568]
Ø 21.23 [0.836]

23-21

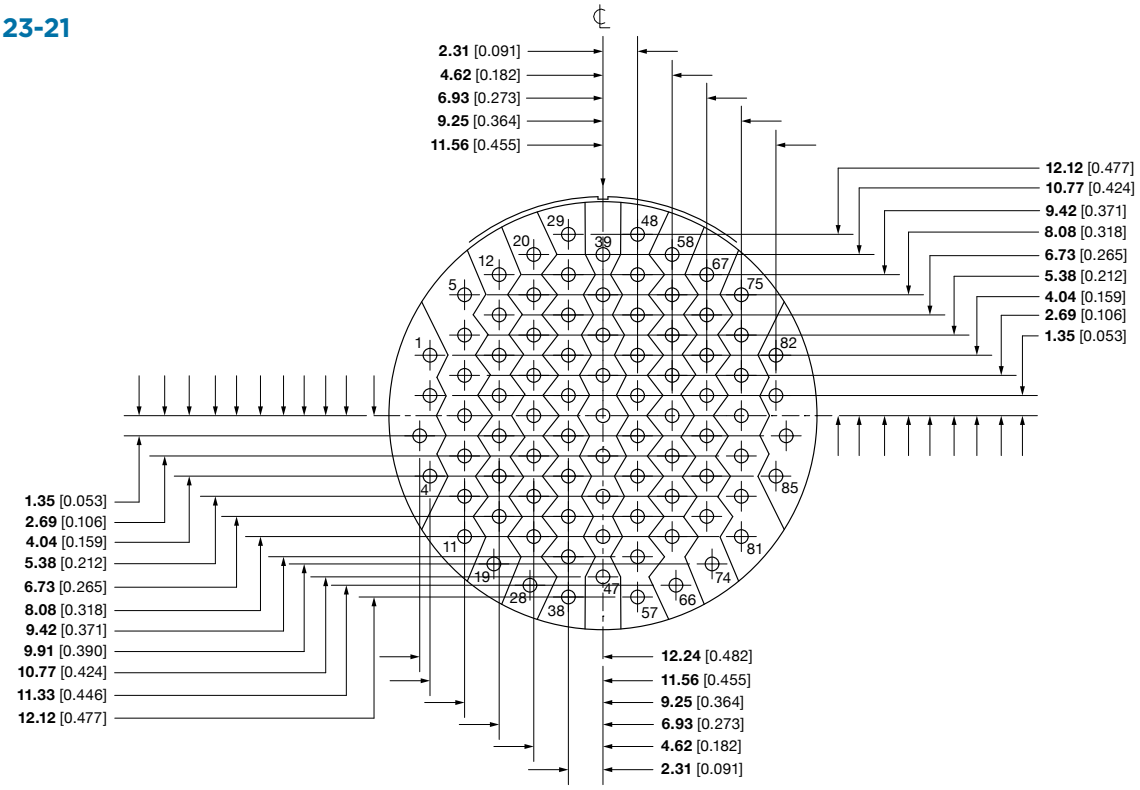
2.31 [0.091]
4.62 [0.182]
6.93 [0.273]
9.25 [0.364]
11.56 [0.455]
12.12 [0.477]
10.77 [0.424]
9.42 [0.371]
8.08 [0.318]
6.73 [0.265]
5.38 [0.212]
4.04 [0.159]
2.69 [0.106]
1.35 [0.053]
1.35 [0.053]
2.69 [0.106]
4.04 [0.159]
5.38 [0.212]
6.73 [0.265]
8.08 [0.318]
9.42 [0.371]
9.91 [0.390]
10.77 [0.424]
11.33 [0.446]
12.12 [0.477]
12.24 [0.482]
11.56 [0.455]
9.25 [0.364]
6.93 [0.273]
4.62 [0.182]
2.31 [0.091]
1
4
5
11
12
19
20
28
29
38
39
47
48
57
58
66
67
74
75
81
82
85

23-21

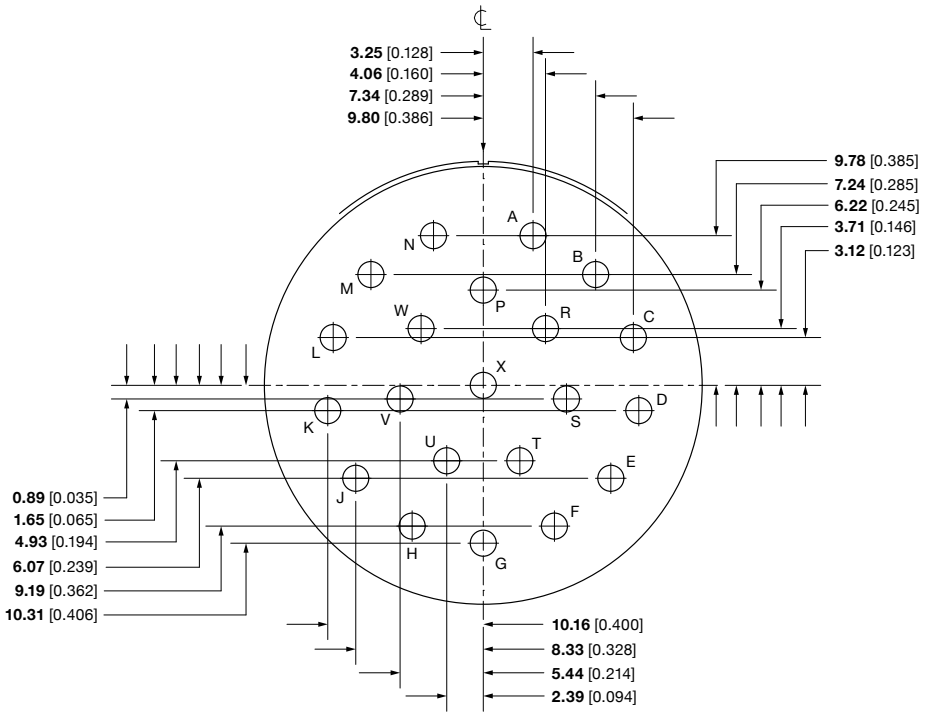
3.25 [0.128]
4.06 [0.160]
7.34 [0.289]
9.80 [0.386]
9.78 [0.385]
7.24 [0.285]
6.22 [0.245]
3.71 [0.146]
3.12 [0.123]
0.89 [0.035]
1.65 [0.065]
4.93 [0.194]
6.07 [0.239]
9.19 [0.362]
10.31 [0.406]
10.16 [0.400]
8.33 [0.328]
5.44 [0.214]
2.39 [0.094]
A
B
C
D
E
F
G
H
J
K
L
M
N
P
R
S
T
U
V
W
X

23-32

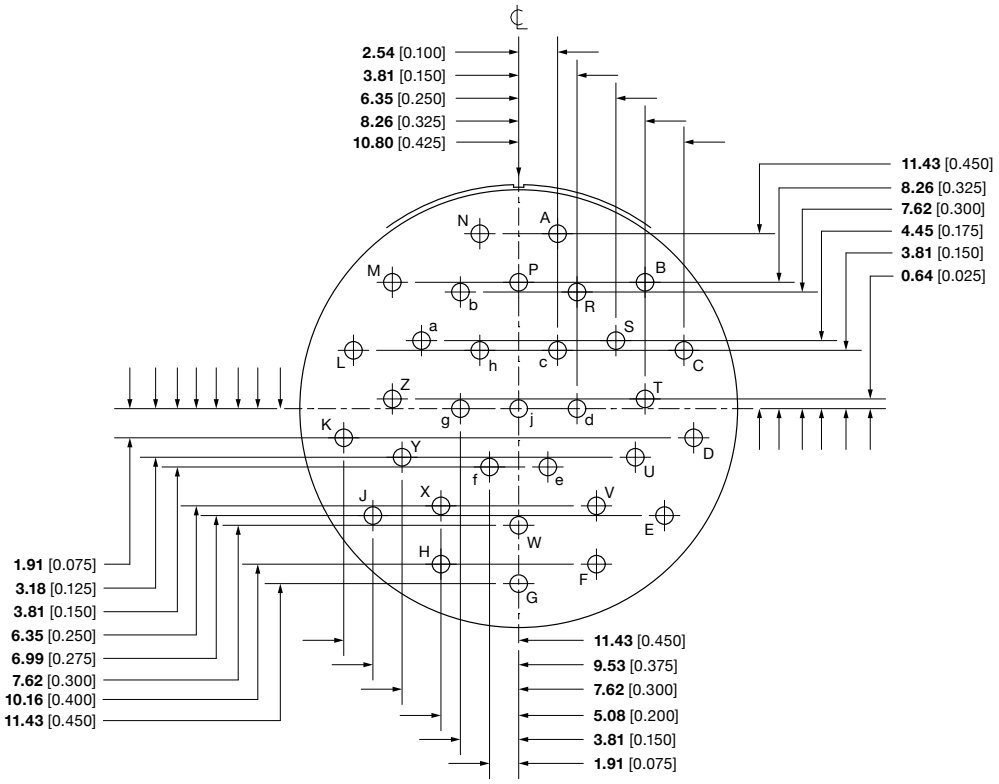
2.54 [0.100]
3.81 [0.150]
6.35 [0.250]
8.26 [0.325]
10.80 [0.425]
11.43 [0.450]
8.26 [0.325]
7.62 [0.300]
4.45 [0.175]
3.81 [0.150]
0.64 [0.025]
N
A
M
P
B
b
R
a
S
L
h
c
C
Z
T
g
j
d
K
Y
D
f
e
U
J
X
V
E
W
H
F
G
1.91 [0.075]
3.18 [0.125]
3.81 [0.150]
6.35 [0.250]
6.99 [0.275]
7.62 [0.300]
10.16 [0.400]
11.43 [0.450]
11.43 [0.450]
9.53 [0.375]
7.62 [0.300]
5.08 [0.200]
3.81 [0.150]
1.91 [0.075]

23-34

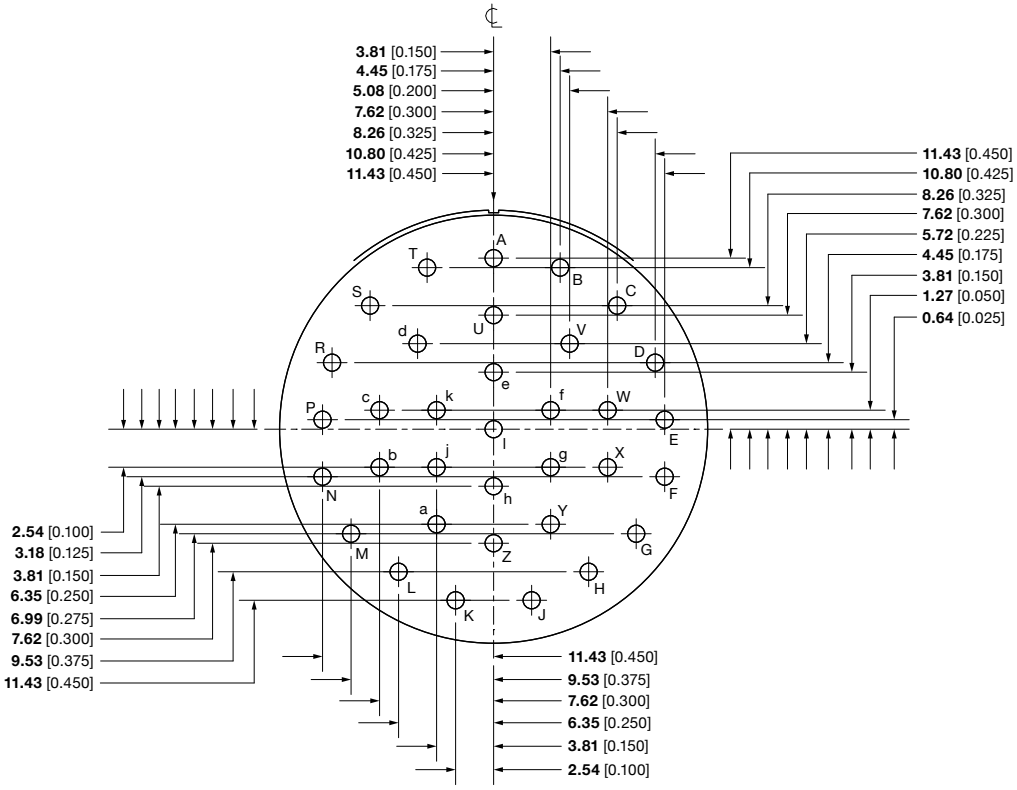
3.81 [0.150]
4.45 [0.175]
5.08 [0.200]
7.62 [0.300]
8.26 [0.325]
10.80 [0.425]
11.43 [0.450]
11.43 [0.450]
10.80 [0.425]
8.26 [0.325]
7.62 [0.300]
5.72 [0.225]
4.45 [0.175]
3.81 [0.150]
1.27 [0.050]
0.64 [0.025]
T
A
B
S
C
U
d
V
R
D
e
P
c
k
f
W
l
E
b
j
g
X
N
h
F
a
Y
M
Z
G
L
H
K
J
2.54 [0.100]
3.18 [0.125]
3.81 [0.150]
6.35 [0.250]
6.99 [0.275]
7.62 [0.300]
9.53 [0.375]
11.43 [0.450]
11.43 [0.450]
9.53 [0.375]
7.62 [0.300]
6.35 [0.250]
3.81 [0.150]
2.54 [0.100]

23-01/23-35

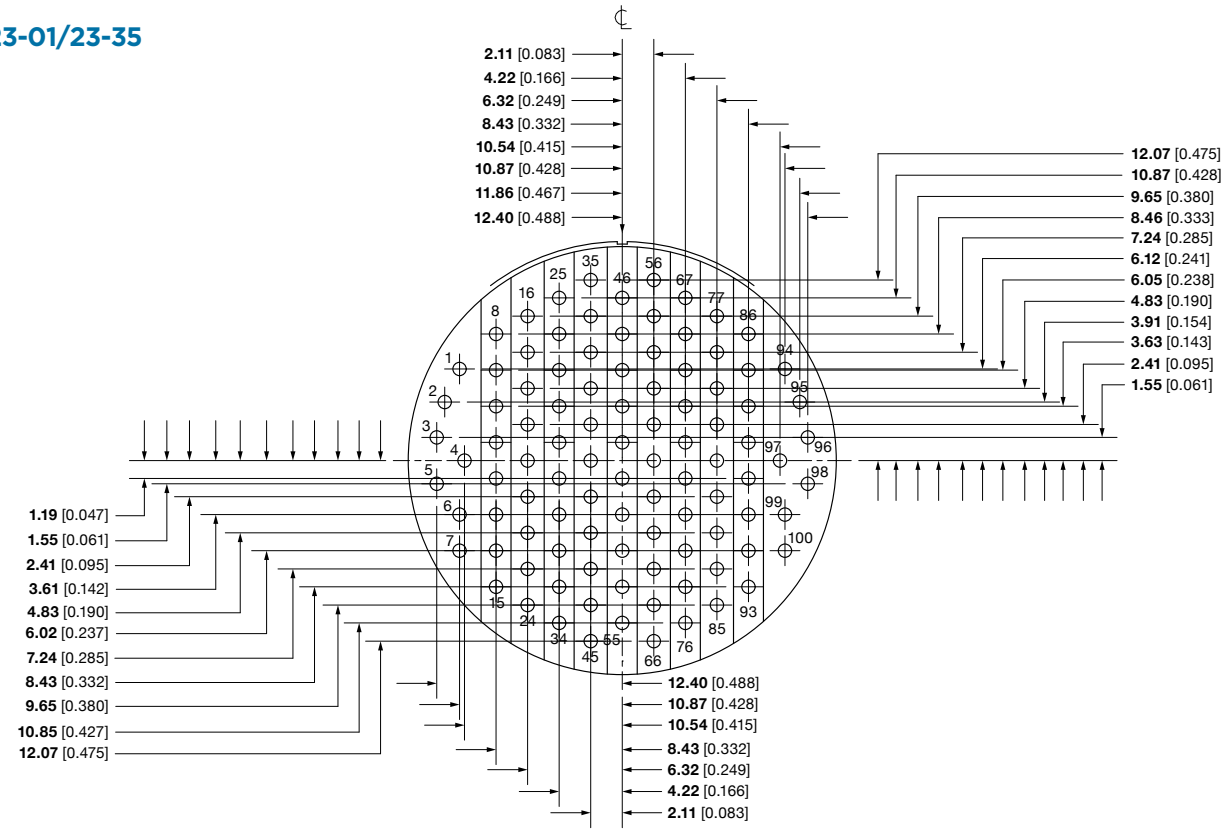

23-36

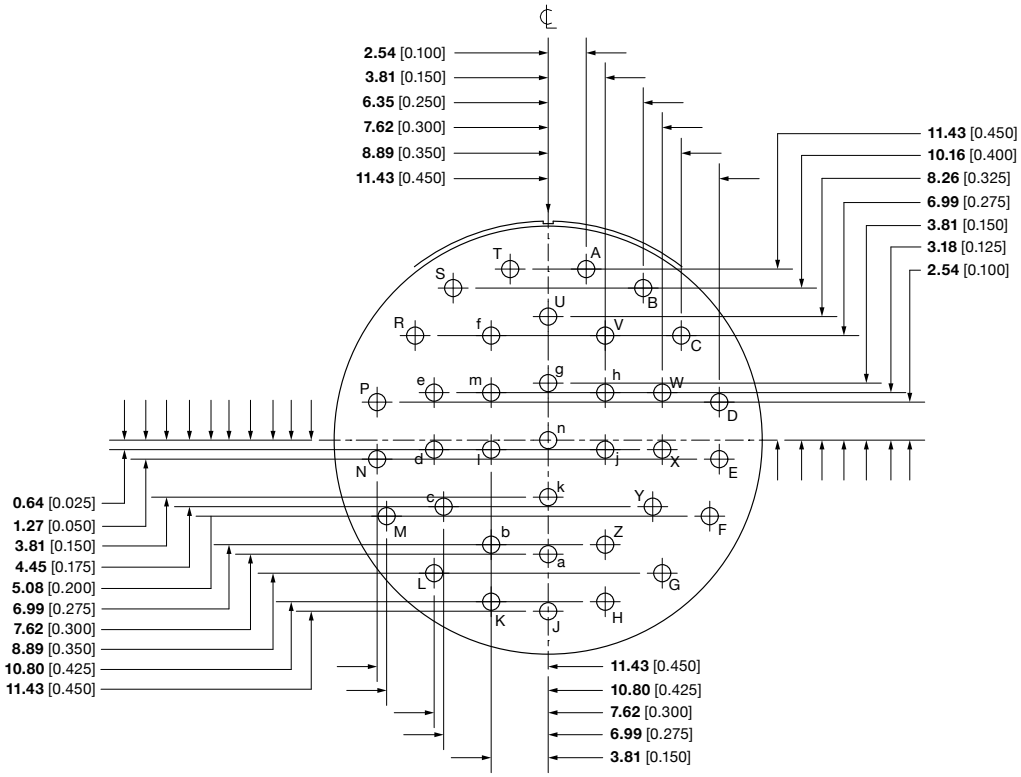

23-53

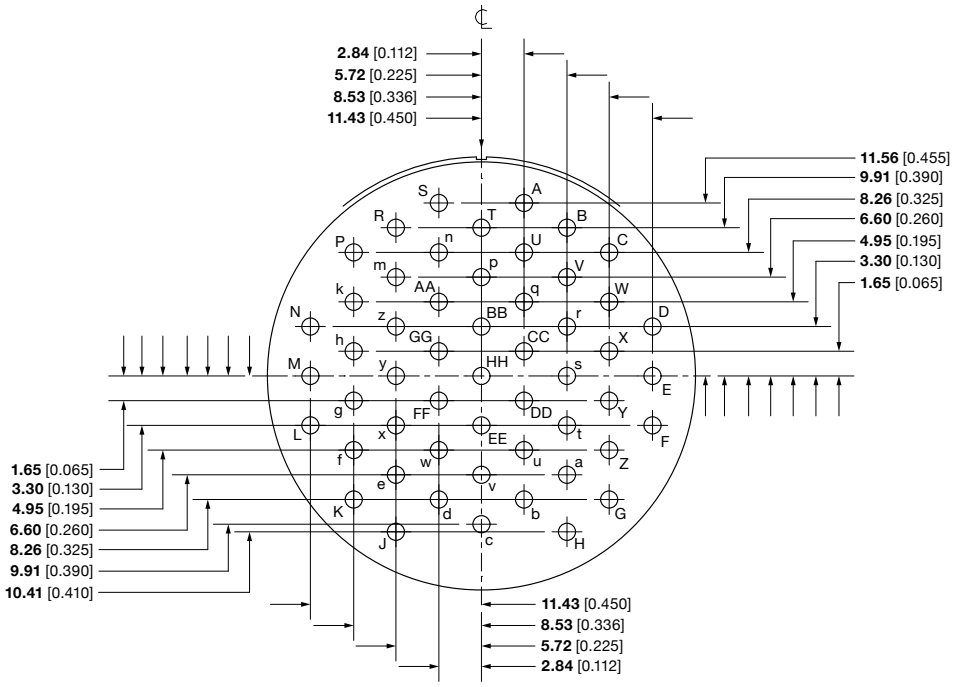
2.84 [0.112]
5.72 [0.225]
8.53 [0.336]
11.43 [0.450]
11.56 [0.455]
9.91 [0.390]
8.26 [0.325]
6.60 [0.260]
4.95 [0.195]
3.30 [0.130]
1.65 [0.065]
1.65 [0.065]
3.30 [0.130]
4.95 [0.195]
6.60 [0.260]
8.26 [0.325]
9.91 [0.390]
10.41 [0.410]
11.43 [0.450]
8.53 [0.336]
5.72 [0.225]
2.84 [0.112]

23-55

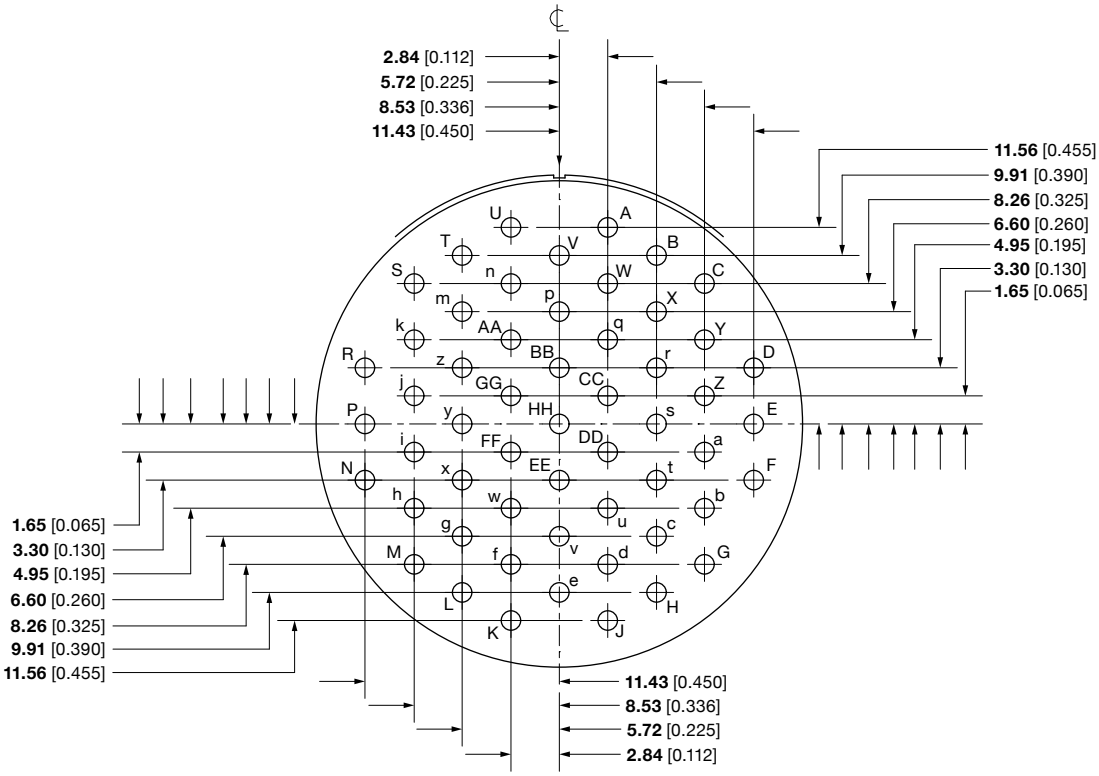
2.84 [0.112]
5.72 [0.225]
8.53 [0.336]
11.43 [0.450]
11.56 [0.455]
9.91 [0.390]
8.26 [0.325]
6.60 [0.260]
4.95 [0.195]
3.30 [0.130]
1.65 [0.065]
1.65 [0.065]
3.30 [0.130]
4.95 [0.195]
6.60 [0.260]
8.26 [0.325]
9.91 [0.390]
11.56 [0.455]
11.43 [0.450]
8.53 [0.336]
5.72 [0.225]
2.84 [0.112]

23-97

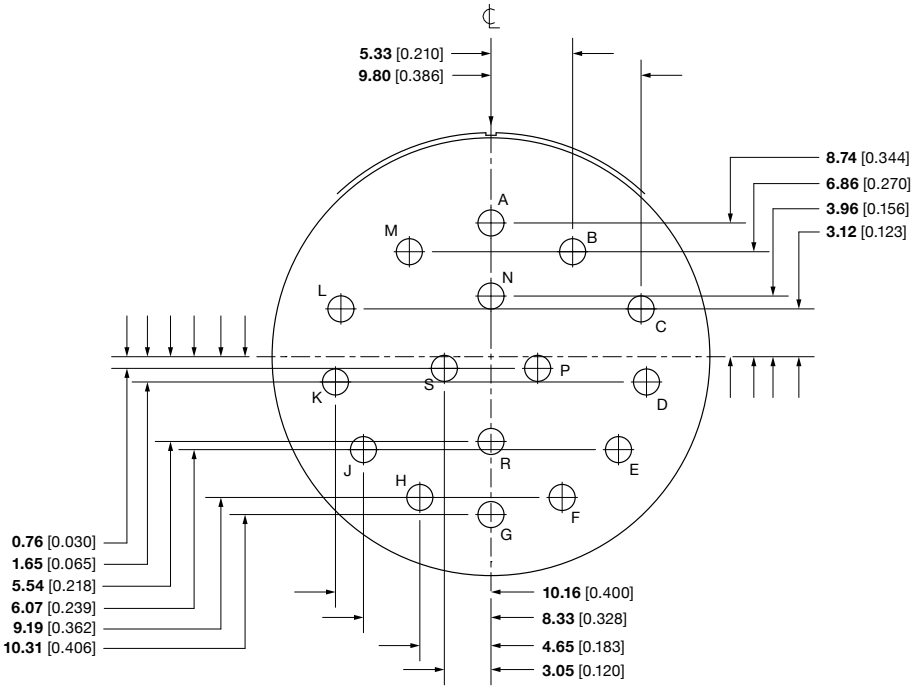
5.33 [0.210]
9.80 [0.386]
8.74 [0.344]
6.86 [0.270]
3.96 [0.156]
3.12 [0.123]
A
B
C
D
E
F
G
H
J
K
L
M
N
P
R
S
0.76 [0.030]
1.65 [0.065]
5.54 [0.218]
6.07 [0.239]
9.19 [0.362]
10.31 [0.406]
10.16 [0.400]
8.33 [0.328]
4.65 [0.183]
3.05 [0.120]

23-99

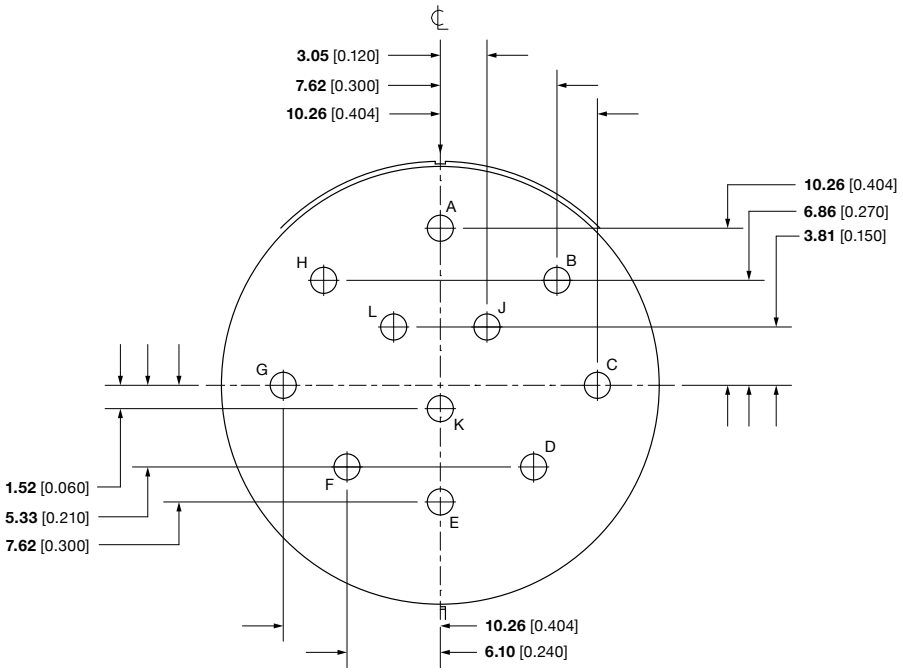
3.05 [0.120]
7.62 [0.300]
10.26 [0.404]
10.26 [0.404]
6.86 [0.270]
3.81 [0.150]
A
B
C
D
E
F
G
H
J
K
L
1.52 [0.060]
5.33 [0.210]
7.62 [0.300]
10.26 [0.404]
6.10 [0.240]

25-02

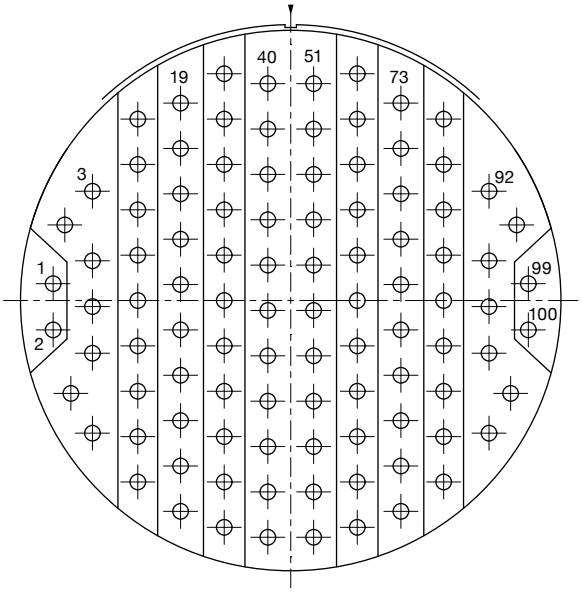

Contact Position	Location	
	X Axis	Y Axis
1	-0.550	+0.039
2	-0.550	-0.068
3	-0.459	+0.253
4	-0.523	+0.175
5	-0.459	+0.092
6	-0.459	-0.014
7	-0.459	-0.122
8	-0.509	-0.215
9	-0.459	-0.307
10	-0.354	+0.420
11	-0.354	+0.315
12	-0.354	+0.210
13	-0.354	+0.105
14	-0.354	+0.000
15	-0.354	-0.105
16	-0.354	-0.210
17	-0.354	-0.315
18	-0.354	-0.420
19	-0.255	+0.457
20	-0.255	+0.352
21	-0.255	+0.247
22	-0.255	+0.142
23	-0.255	+0.037
24	-0.255	-0.068
25	-0.255	-0.173
26	-0.255	-0.278
27	-0.255	-0.383
28	-0.255	-0.488
29	-0.154	+0.525
30	-0.154	+0.420
31	-0.154	+0.315
32	-0.154	+0.210
33	-0.154	+0.105
34	-0.154	+0.000

Contact Position	Location	
	X Axis	Y Axis
35	-0.154	-0.105
36	-0.154	-0.210
37	-0.154	-0.315
38	-0.154	-0.420
39	-0.154	-0.525
40	-0.053	+0.502
41	-0.053	+0.397
42	-0.053	+0.292
43	-0.053	+0.187
44	-0.053	+0.082
45	-0.053	-0.023
46	-0.053	-0.128
47	-0.053	-0.233
48	-0.053	-0.338
49	-0.053	-0.443
50	-0.053	-0.548
51	+0.053	+0.502
52	+0.053	+0.397
53	+0.053	+0.292
54	+0.053	+0.187
55	+0.053	+0.082
56	+0.053	-0.023
57	+0.053	-0.128
58	+0.053	-0.233
59	+0.053	-0.338
60	+0.053	-0.443
61	+0.053	-0.548
62	+0.154	+0.525
63	+0.154	+0.420
64	+0.154	+0.315
65	+0.154	+0.210
66	+0.154	+0.105
67	+0.154	+0.000
68	+0.154	-0.105

Contact Position	Location	
	X Axis	Y Axis
69	+0.154	-0.210
70	+0.154	-0.315
71	+0.154	-0.420
72	+0.154	-0.525
73	+0.255	+0.457
74	+0.255	+0.352
75	+0.255	+0.247
76	+0.255	+0.142
77	+0.255	+0.037
78	+0.255	-0.068
79	+0.255	-0.173
80	+0.255	-0.278
81	+0.255	-0.383
82	+0.255	-0.488
83	+0.354	+0.420
84	+0.354	+0.315
85	+0.354	+0.210
86	+0.354	+0.105
87	+0.354	+0.000
88	+0.354	-0.105
89	+0.354	-0.210
90	+0.354	-0.315
91	+0.354	-0.420
92	+0.459	+0.253
93	+0.523	+0.175
94	+0.459	+0.092
95	+0.459	-0.014
96	+0.459	-0.122
97	+0.509	-0.215
98	+0.459	-0.037
99	+0.550	+0.039
100	+0.550	-0.068

25-04

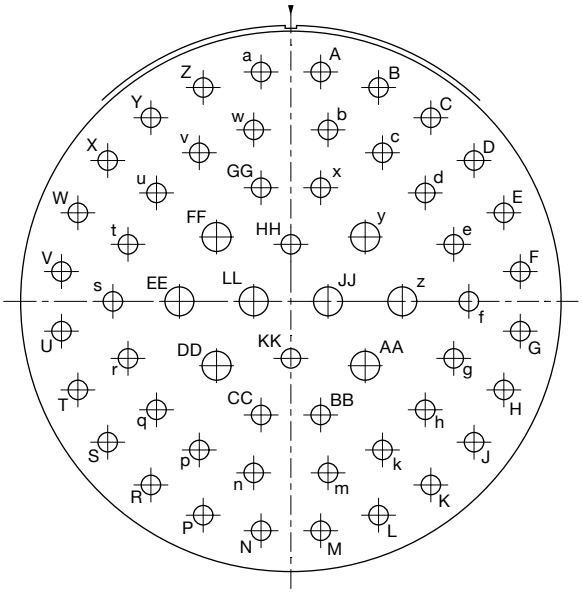

Contact Position	Location	
	X Axis	Y Axis
A	+0.069	+0.531
B	+0.203	+0.495
C	+0.324	+0.425
D	+0.424	+0.326
E	+0.493	+0.205
F	+0.531	+0.069
G	+0.531	-0.069
H	+0.493	-0.205
J	+0.424	-0.326
K	+0.324	-0.425
L	+0.203	-0.495
M	+0.069	-0.531
N	-0.069	-0.531
P	-0.203	-0.495
R	-0.324	-0.425
S	-0.424	-0.326
T	-0.493	-0.205
U	-0.531	-0.069
V	-0.531	+0.069

Contact Position	Location	
	X Axis	Y Axis
W	-0.493	+0.205
X	-0.424	+0.326
Y	-0.324	+0.425
Z	-0.203	+0.495
a	-0.069	+0.531
b	+0.806	+0.397
c	+0.212	+0.344
d	+0.311	+0.251
e	+0.377	+0.132
f	+0.412	+0.000
g	+0.377	-0.132
h	+0.311	-0.251
k	+0.212	-0.344
m	+0.086	-0.397
n	-0.086	-0.397
p	-0.212	-0.344
q	-0.311	-0.251
r	-0.377	-0.132
s	-0.412	+0.000

Contact Position	Location	
	X Axis	Y Axis
t	-0.377	+0.132
u	-0.311	+0.251
v	-0.212	+0.344
w	-0.086	+0.397
x	+0.069	+0.263
y	+0.172	+0.149
z	+0.258	+0.000
AA	+0.172	-0.149
BB	+0.069	-0.263
CC	-0.069	-0.263
DD	-0.172	-0.149
EE	-0.258	+0.000
FF	-0.172	+0.149
GG	-0.069	+0.263
HH	+0.000	+0.132
JJ	+0.086	+0.000
KK	+0.000	-0.132
LL	-0.086	+0.000

25-19

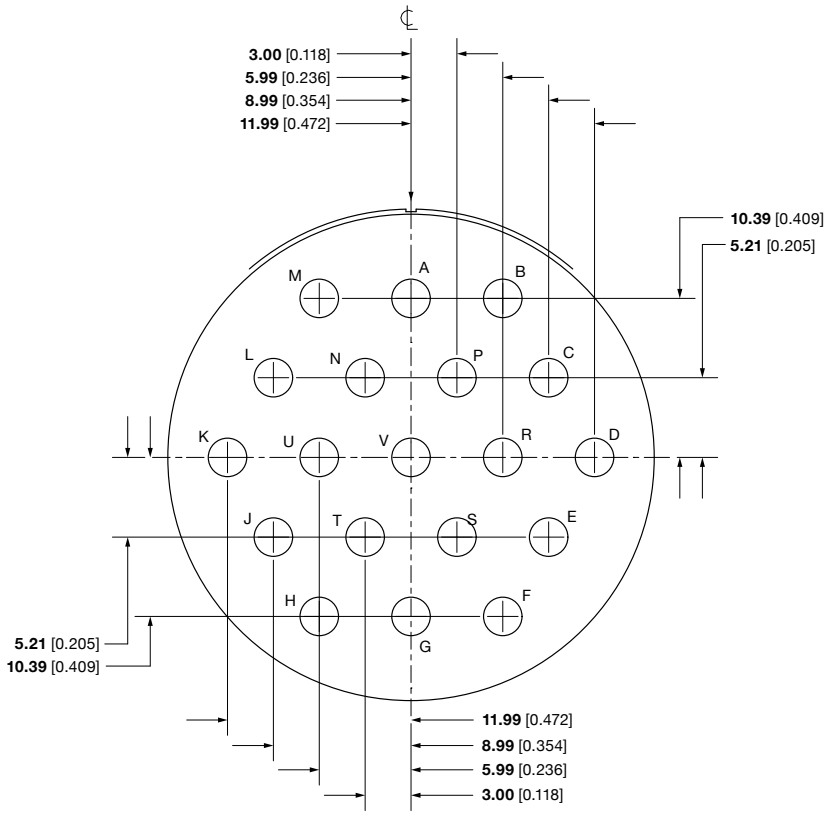
3.00 [0.118]
5.99 [0.236]
8.99 [0.354]
11.99 [0.472]
10.39 [0.409]
5.21 [0.205]
M
A
B
L
N
P
C
K
U
V
R
D
J
T
S
E
H
F
G
5.21 [0.205]
10.39 [0.409]
11.99 [0.472]
8.99 [0.354]
5.99 [0.236]
3.00 [0.118]

25-24

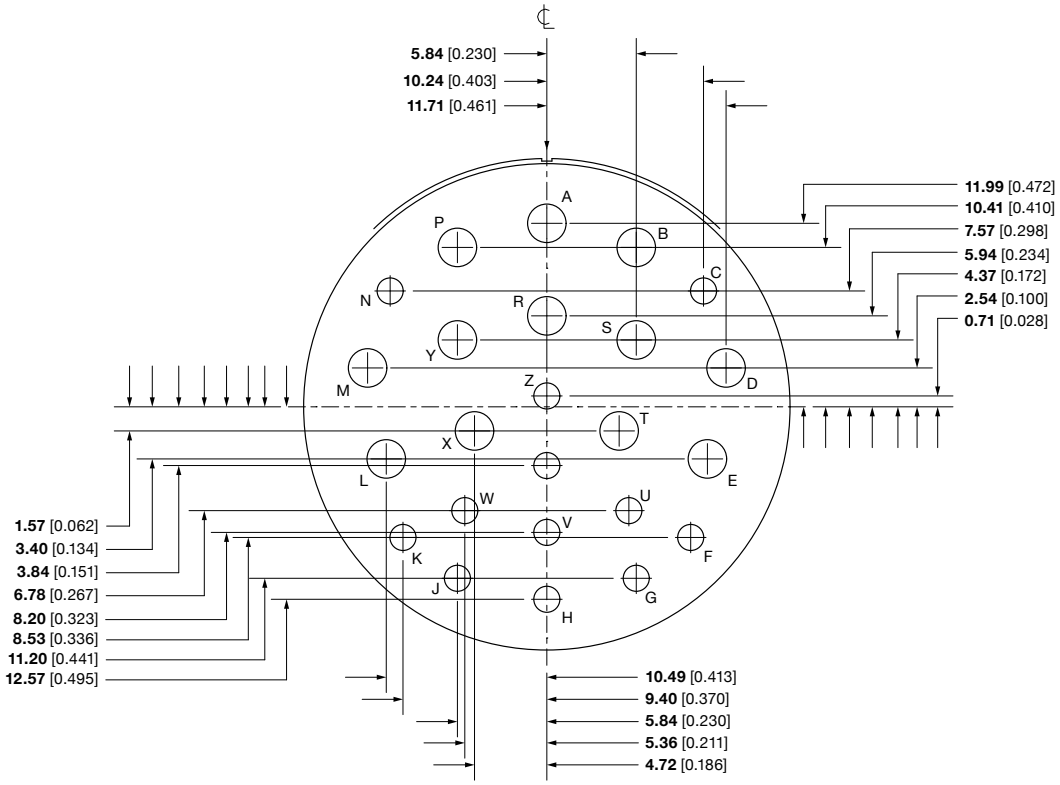
5.84 [0.230]
10.24 [0.403]
11.71 [0.461]
11.99 [0.472]
10.41 [0.410]
7.57 [0.298]
5.94 [0.234]
4.37 [0.172]
2.54 [0.100]
0.71 [0.028]
A
P
B
C
N
R
S
Y
M
Z
D
T
X
L
E
W
U
V
K
F
J
G
H
1.57 [0.062]
3.40 [0.134]
3.84 [0.151]
6.78 [0.267]
8.20 [0.323]
8.53 [0.336]
11.20 [0.441]
12.57 [0.495]
10.49 [0.413]
9.40 [0.370]
5.84 [0.230]
5.36 [0.211]
4.72 [0.186]

25-29

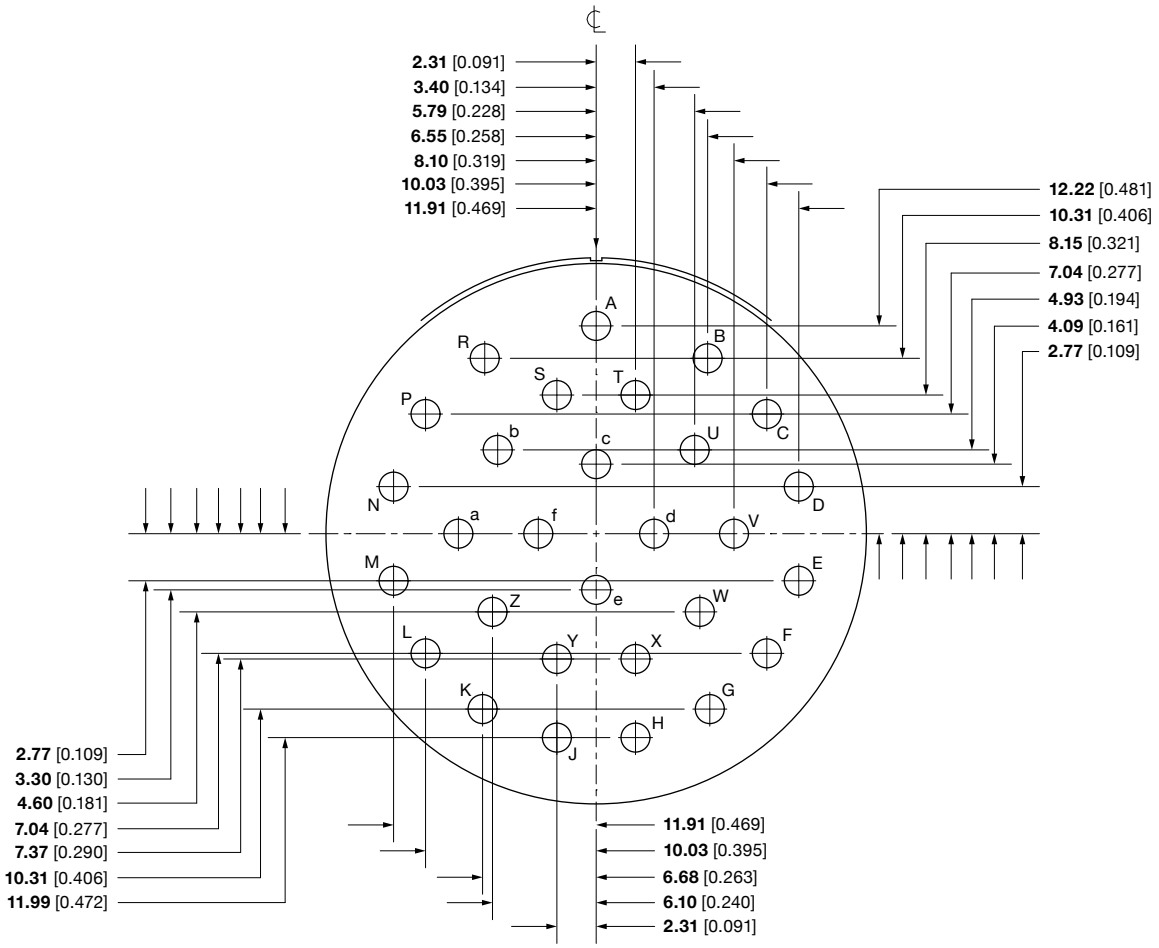
2.31 [0.091]
3.40 [0.134]
5.79 [0.228]
6.55 [0.258]
8.10 [0.319]
10.03 [0.395]
11.91 [0.469]
12.22 [0.481]
10.31 [0.406]
8.15 [0.321]
7.04 [0.277]
4.93 [0.194]
4.09 [0.161]
2.77 [0.109]
A
B
R
S
T
P
C
b
c
U
N
D
a
f
d
V
M
E
e
W
Z
L
Y
X
F
K
G
H
J
2.77 [0.109]
3.30 [0.130]
4.60 [0.181]
7.04 [0.277]
7.37 [0.290]
10.31 [0.406]
11.99 [0.472]
11.91 [0.469]
10.03 [0.395]
6.68 [0.263]
6.10 [0.240]
2.31 [0.091]

25-01, 25-35

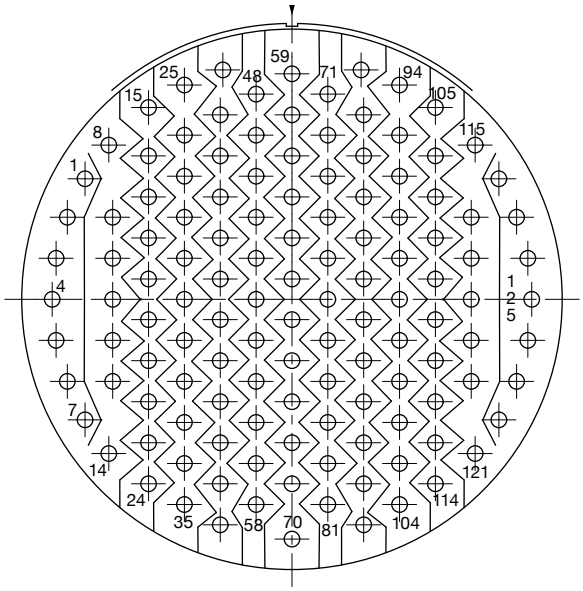

Contact Position	Location	
	X Axis	Y Axis
1	-0.479	+0.279
2	-0.520	+0.190
3	-0.546	+0.095
4	-0.555	+0.000
5	-0.546	-0.095
6	-0.520	-0.190
7	-0.479	-0.279
8	-0.424	+0.357
9	-0.415	+0.190
10	-0.415	+0.095

Contact Position	Location	
	X Axis	Y Axis
11	-0.415	+0.000
12	-0.415	-0.095
13	-0.415	-0.190
14	-0.424	-0.357
15	-0.332	+0.444
16	-0.332	+0.332
17	-0.332	-0.237
18	-0.332	+0.142
19	-0.332	+0.047
20	-0.332	-0.047

Contact Position	Location	
	X Axis	Y Axis
21	-0.332	-0.142
22	-0.332	-0.237
23	-0.332	-0.332
24	-0.332	-0.427
25	-0.249	+0.496
26	-0.249	+0.380
27	-0.249	+0.285
28	-0.249	+0.190
29	-0.249	+0.095
30	-0.249	+0.000

Contact Position	Location	
	X Axis	Y Axis
31	-0.249	-0.095
32	-0.249	-0.190
33	-0.249	-0.285
34	-0.249	-0.380
35	-0.249	-0.475
36	-0.160	+0.531
37	-0.166	+0.427
38	-0.166	+0.332
39	-0.166	+0.237
40	-0.166	+0.142
41	-0.166	+0.047
42	-0.166	-0.047
43	-0.166	-0.142
44	-0.166	-0.237
45	-0.166	-0.332
46	-0.166	-0.427
47	-0.166	-0.522
48	-0.083	+0.475
49	-0.083	+0.380
50	-0.083	+0.285
51	-0.083	+0.190
52	-0.083	+0.095
53	-0.083	+0.000
54	-0.083	-0.095
55	-0.083	-0.190
56	-0.083	-0.285
57	-0.083	-0.380
58	-0.083	-0.475
59	+0.000	+0.522
60	+0.000	+0.427
61	+0.000	+0.332
62	+0.000	+0.237
63	+0.000	+0.142

Contact Position	Location	
	X Axis	Y Axis
64	+0.000	+0.047
65	+0.000	-0.047
66	+0.000	-0.142
67	+0.000	-0.237
68	+0.000	-0.332
69	+0.000	-0.427
70	+0.000	-0.555
71	+0.083	+0.475
72	+0.083	+0.380
73	+0.083	+0.285
74	+0.083	+0.190
75	+0.083	+0.095
76	+0.083	+0.000
77	+0.083	-0.095
78	+0.083	-0.190
79	+0.083	-0.285
80	+0.083	-0.380
81	+0.083	-0.475
82	+0.160	+0.531
83	+0.166	+0.427
84	+0.166	+0.332
85	+0.166	+0.237
86	+0.166	+0.142
87	+0.166	+0.047
88	+0.166	-0.047
89	+0.166	-0.142
90	+0.166	-0.237
91	+0.166	-0.332
92	+0.166	-0.427
93	+0.249	-0.522
94	+0.249	+0.496
95	+0.249	+0.380
96	+0.249	+0.285

Contact Position	Location	
	X Axis	Y Axis
97	+0.249	+0.190
98	+0.249	+0.095
99	+0.249	+0.000
100	+0.249	-0.095
101	+0.249	-0.190
102	+0.249	-0.285
103	+0.249	-0.380
104	+0.249	-0.475
105	+0.332	+0.444
106	-0.232	+0.332
107	-0.232	+0.237
108	-0.232	+0.142
109	-0.232	+0.047
110	-0.232	-0.047
111	-0.232	-0.142
112	-0.232	-0.237
113	-0.232	-0.332
114	-0.232	-0.427
115	+0.424	+0.357
116	+0.415	+0.190
117	+0.415	+0.095
118	+0.415	+0.000
119	+0.415	-0.095
120	+0.415	-0.190
121	+0.424	-0.357
122	+0.479	+0.279
123	+0.520	+0.190
124	+0.546	+0.095
125	+0.555	+0.000
126	+0.546	-0.095
127	+0.520	-0.190
128	+0.479	-0.279

25-37

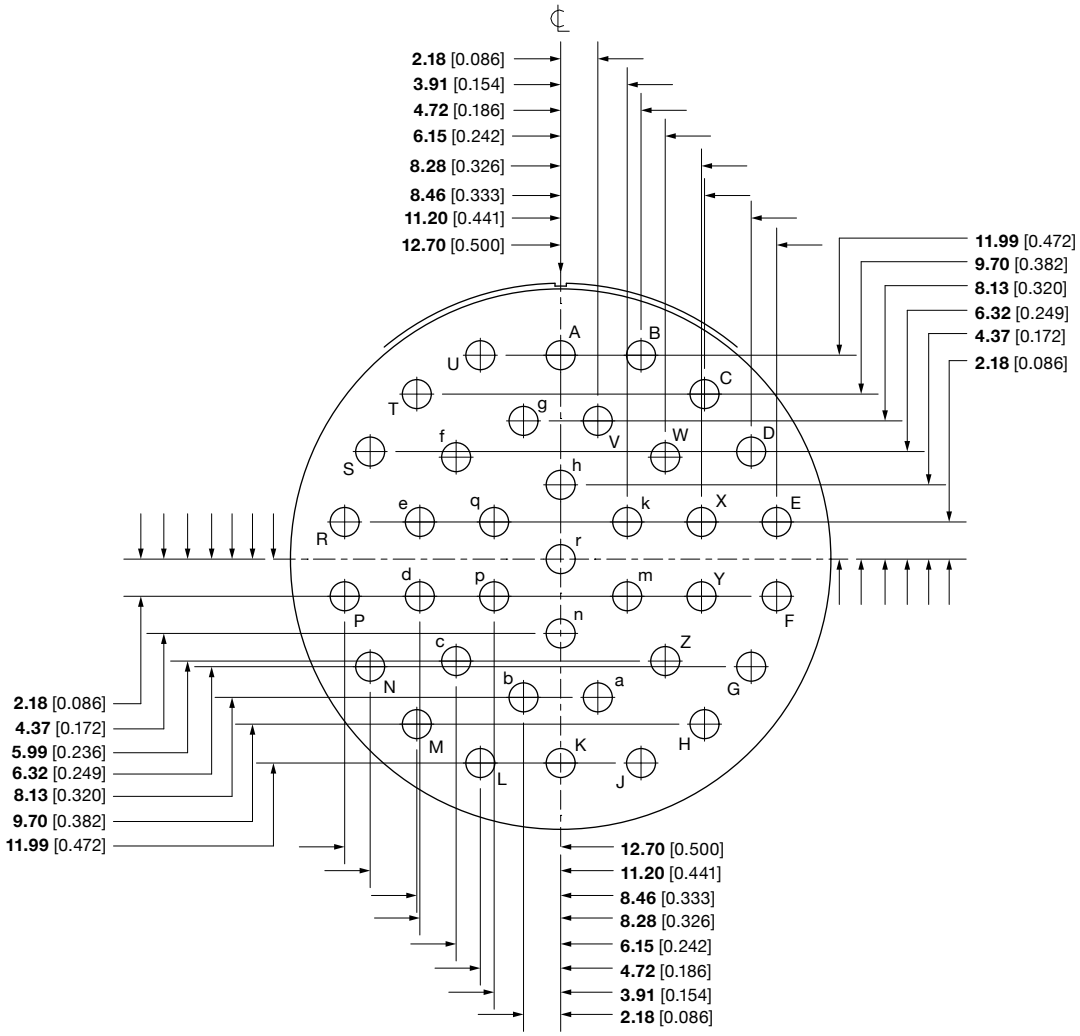
2.18 [0.086]
3.91 [0.154]
4.72 [0.186]
6.15 [0.242]
8.28 [0.326]
8.46 [0.333]
11.20 [0.441]
12.70 [0.500]
11.99 [0.472]
9.70 [0.382]
8.13 [0.320]
6.32 [0.249]
4.37 [0.172]
2.18 [0.086]
A
B
U
C
T
g
V
W
D
f
S
h
e
q
k
X
E
R
r
d
p
m
Y
P
F
n
c
Z
N
b
a
G
M
K
H
L
J
2.18 [0.086]
4.37 [0.172]
5.99 [0.236]
6.32 [0.249]
8.13 [0.320]
9.70 [0.382]
11.99 [0.472]
12.70 [0.500]
11.20 [0.441]
8.46 [0.333]
8.28 [0.326]
6.15 [0.242]
4.72 [0.186]
3.91 [0.154]
2.18 [0.086]

25-43

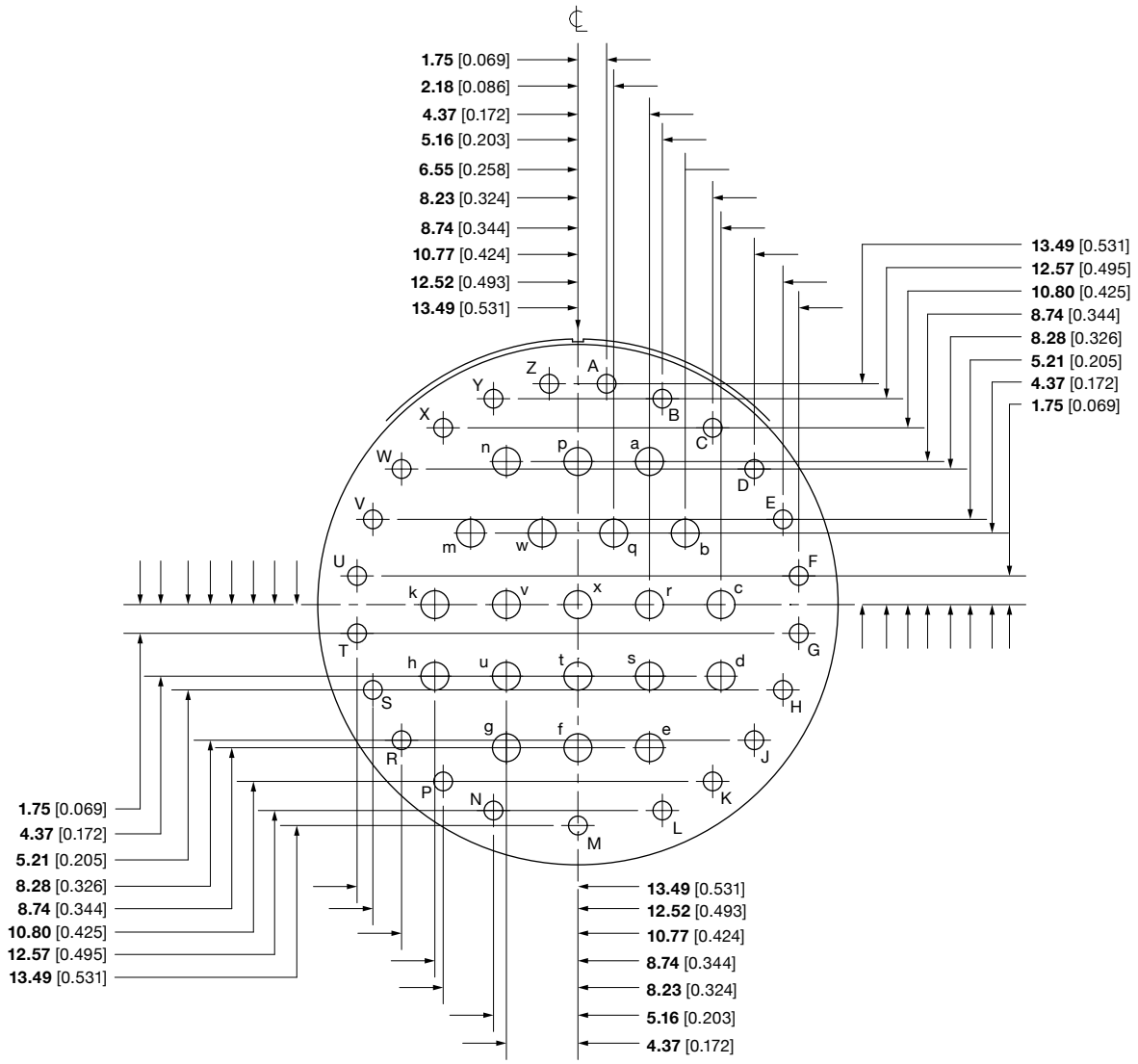
1.75 [0.069]
2.18 [0.086]
4.37 [0.172]
5.16 [0.203]
6.55 [0.258]
8.23 [0.324]
8.74 [0.344]
10.77 [0.424]
12.52 [0.493]
13.49 [0.531]
13.49 [0.531]
12.57 [0.495]
10.80 [0.425]
8.74 [0.344]
8.28 [0.326]
5.21 [0.205]
4.37 [0.172]
1.75 [0.069]
1.75 [0.069]
4.37 [0.172]
5.21 [0.205]
8.28 [0.326]
8.74 [0.344]
10.80 [0.425]
12.57 [0.495]
13.49 [0.531]
13.49 [0.531]
12.52 [0.493]
10.77 [0.424]
8.74 [0.344]
8.23 [0.324]
5.16 [0.203]
4.37 [0.172]
Z A Y B X C W n p a D V E m w q b U F k v x r c T G h u t s d S H g f e R J P N K L M

25-61

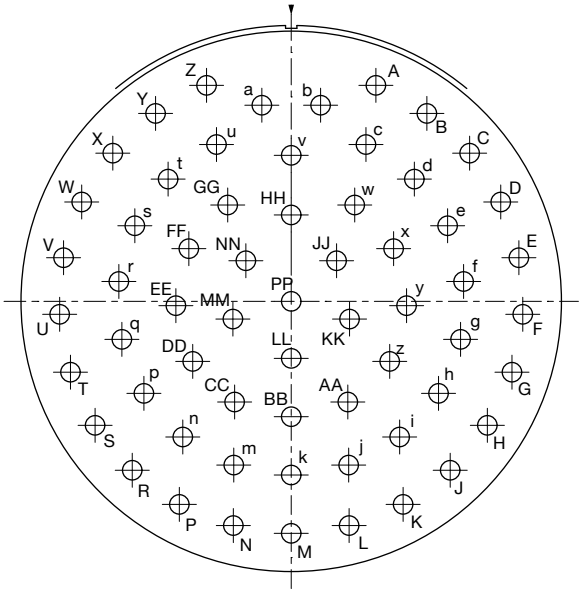

Contact Position	Location	
	X Axis	Y Axis
A	+0.196	+0.500
B	+0.314	+0.435
C	+0.413	+0.343
D	+0.485	+0.230
E	+0.527	+0.101
F	+0.536	-0.030
G	+0.511	-0.164
H	+0.454	-0.287
J	+0.368	-0.391
K	+0.259	-0.470
L	+0.134	-0.519
M	+0.000	-0.537
N	-0.134	-0.519
P	-0.259	-0.470
R	-0.368	-0.391
S	-0.454	-0.287
T	-0.511	-0.164
U	-0.536	-0.030
V	-0.527	+0.101
W	-0.485	+0.230
X	-0.413	+0.343

Contact Position	Location	
	X Axis	Y Axis
Y	-0.314	+0.435
Z	-0.196	+0.500
a	-0.068	+0.454
b	+0.068	+0.454
c	+0.173	+0.363
d	+0.285	+0.283
e	+0.362	+0.175
f	+0.399	+0.046
g	+0.392	-0.088
h	+0.341	-0.213
i	+0.251	-0.314
j	+0.133	-0.379
k	+0.000	-0.402
m	-0.133	-0.379
n	-0.251	-0.314
p	-0.341	-0.213
q	-0.392	-0.088
r	-0.399	+0.046
s	-0.362	+0.175
t	-0.285	+0.283
u	-0.173	+0.363

Contact Position	Location	
	X Axis	Y Axis
v	+0.000	+0.338
w	+0.147	+0.223
x	+0.237	+0.122
y	+0.267	-0.010
z	+0.228	-0.139
AA	+0.131	-0.233
BB	+0.000	-0.267
CC	-0.131	-0.233
DD	-0.228	-0.139
EE	-0.267	-0.010
FF	-0.237	+0.122
GG	-0.147	+0.223
HH	+0.000	+0.200
JJ	+0.105	+0.094
KK	+0.135	-0.041
LL	+0.000	-0.132
MM	-0.135	-0.041
NN	-0.105	+0.094
PP	+0.000	+0.000
—	—	—

ROBUST

- Marine bronze shell
- Excellent corrosion resistance
- -65°C to +175°C operating temperature range
- Excellent EMI protection

RELIABLE

- 100% scoop proof
- Self locking threaded coupling

COMPLIANT

- STD CECC 75201-002
- RoHS compliant

VERSATILE

- Available in 9 shell sizes
- Single hole mounting
- Environmentally sealed

APPLICATIONS

- Shipboard
- Ground vehicles

DTS-B Series Bronze Connectors

38999 Series III-Style Connectors

DEUTSCH DTS-B threaded connectors are MIL-DTL-38999 Series III and STD CECC 75201-002 styles, but feature a bronze shell with a scoop-proof design, and environmental sealing to help withstand harsh marine environments.

Marine bronze offers excellent corrosion protection. The shell material is robust and inherently resists corrosion, eliminating the need for plating that can wear to expose base materials.

The DEUTSCH DTS-B Series subminiature circular connectors offer a scoop-proof design for easy, reliable mating and a threaded coupling for excellent vibration resistance. Available in nine shell sizes, the connector's arrangements, contacts and tools all conform to standard MIL-DTL 38999 Series III. Excellent corrosion resistance makes them well suited to most marine and military ground vehicle applications.

DTS-B Bronze Connectors

38999 Series III-Style Connectors

Specifications

MATERIALS

- **Shell:** Marine bronze
- **Insert:** Thermoplastic and fluorinated silicone elastomer
- **EMI Spring Fingers:** Nickel or cadmium-plated beryllium copper
- **O-Ring:** Fluorinated silicone elastomer

ENVIRONMENTAL

- **Temperature Range:** -65°C to +175°C
- **Fluid Resistance:** Fluid immersion per EIA 364.10, including resistance to
  MIL-PRF-5606: Hydraulic fluid
  MIL-DTL-83133: JP-8 aviation fuel
  MIL-PRF-7808: Lubricating oil
  MIL-PRF-23699: Lubricating oil
  MIL-A-8243: Deicing/defrosting fluid
  MIL-C-25769: Aircraft cleaning compound
  MIL-PRF-87937: Aircraft cleaning compound
  MIL-G-3056: Gasoline
- **Salt Spray:** 500 hours
- **Thermal Cycling:** per MIL-STD-1344 method 1001 test B

MECHANICAL

- **Sine Vibration:** Up to 60 g for 36 hr.
- **Random Vibration:** Up to 41.7 g for 16 hr. at 175° C
  Up to 50 g for 16 hr. at ambient temperature
- **Shock:** 300 g, 3 ms in the 3 axes
- **Durability:** 500 mating cycles
- **Contact Retention:**
  Size 23: 44 N (10 lb.)
  Size 22D: 44 N (10 lb.)
  Size 20: 67 N (15 lb.)
  Size 16: 111 N (25 lb.)
  Size 12: 111 N (25 lb.)
  Size 8: 111 N (25 lb.)

ELECTRICAL

- **Shell-to-Shell Conductivity:** 2.5 mV max.
- **Shielding Effectiveness:** >90 dB at 100 MHz, >65 dB through 10 GHz

DTS-B Bronze Connectors

38999 Series III-Style Connectors

Voltage Rating

Service Rating	Suggested Operating Voltage		Test Voltage at Altitude (VAC_{rms})			
	VAC_{rms}	VDC	Sea Level	50,000 Ft.	70,000 Ft.	100,000 Ft.
M	400	550	1300	550	350	200
N	300	450	1000	400	260	200
I	600	850	1800	600	400	200
II	750	1050	2300	800	500	200

Current Rating

Contact Size	Test Current (A)	Voltage Drop (mV)
23	5	73
22D	5	73
20	7.5	55
16	13	50
12	23	42
10	33	34
8	46	26

Thread Sizes

Shell Size	Accessory Thread (6g 0.100R)	Mating Thread (0.1P-0.3L)	Jam Nut Thread (6g 0.100R)
9	M12 x 1.0	.6250	M17 x 1.0
11	M15 x 1.0	.7500	M20 x 1.0
13	M18 x 1.0	.8750	M25 x 1.0
15	M22 x 1.0	1.0000	M28 x 1.0
17	M25 x 1.0	1.1875	M32 x 1.0
19	M28 x 1.0	1.2500	M35 x 1.0
21	M31 x 1.0	1.3750	M38 x 1.0
23	M34 x 1.0	1.5000	M41 x 1.0
25	M37 x 1.0	1.6250	M44 x 1.0

DTS-B Bronze Connectors

38999 Series III-Style Connectors

Part Numbering

DTS 24 B 15 - 19 P N

FAMILY
DTS

STYLE
20 Square Flange Receptacle
24 Jam Nut Receptacle
26 Plug

MATERIAL
B Marine Bronze

SHELL SIZE
9, 11, 13, 15, 17, 19, 21, 23, 25

INSERT ARRANGEMENT
P Pin
S Socket
H 1500-Cycle Pin
J 1500-Cycle Socket
A Less Pin
B Less Socket
U PCB Pin
M PCB Socket

KEYING
N (Normal)
A, B, C, D, E

DTS-B Bronze Connectors

38999 Series III-Style Connectors

Square Flange Receptacle
Type 20

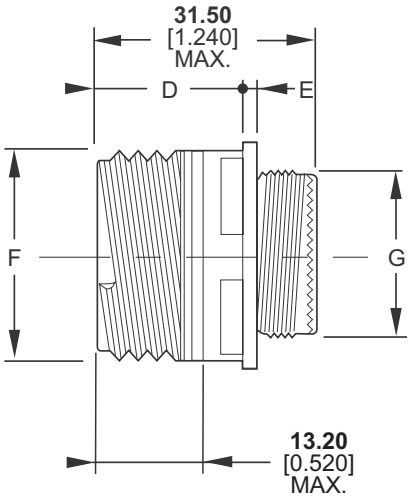

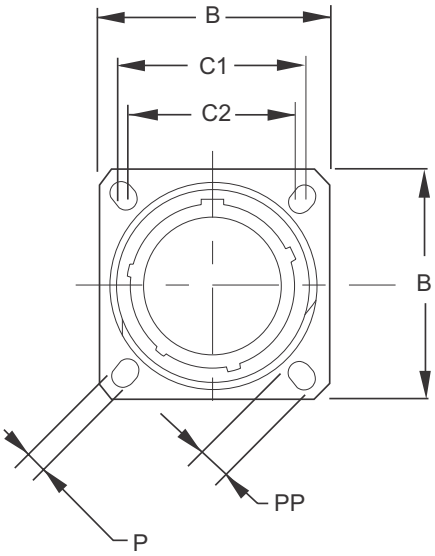

Shell Size	B ±0.3 (±0.012)	C1	C2	D Max.	E Max.	F ±0.1 (±0.004)	G ±0.1 (±0.004)	P ±0.2 (±0.008)	PP ±0.2 (±0.008)
09	**23.80** 0.937	**18.26** 0.719	**15.09** 0.594	**20.90** 0.823	**2.50** 0.098	**15.75** 0.620	**11.90** 0.469	**3.25** 0.128	**5.49** 0.216
11	**26.20** 1.031	**20.62** 0.812	**18.26** 0.719	**20.90** 0.823	**2.50** 0.098	**18.90** 0.744	**14.90** 0.587	**3.25** 0.128	**4.93** 0.194
13	**28.60** 1.126	**23.01** 0.906	**20.62** 0.812	**20.90** 0.823	**2.50** 0.098	**22.10** 0.870	**17.90** 0.705	**3.25** 0.128	**4.93** 0.194
15	**31.00** 1.220	**24.61** 0.969	**23.01** 0.906	**20.90** 0.823	**2.50** 0.098	**25.25** 0.994	**21.90** 0.862	**3.25** 0.128	**4.93** 0.194
17	**33.30** 1.311	**26.97** 1.062	**24.61** 0.969	**20.90** 0.823	**2.50** 0.098	**29.95** 1.179	**24.90** 0.980	**3.25** 0.128	**4.93** 0.194
19	**36.50** 1.437	**29.36** 1.156	**26.97** 1.062	**20.90** 0.823	**2.50** 0.098	**31.55** 1.242	**27.90** 1.098	**3.25** 0.128	**4.93** 0.194
21	**39.70** 1.563	**31.75** 1.250	**29.36** 1.156	**20.10** 0.791	**3.20** 0.126	**34.70** 1.366	**30.90** 1.217	**3.25** 0.128	**4.93** 0.194
23	**42.90** 1.689	**34.93** 1.375	**31.75** 1.250	**20.10** 0.791	**3.20** 0.126	**37.90** 1.492	**33.90** 1.335	**3.91** 0.154	**6.15** 0.242
25	**46.00** 1.811	**38.10** 1.500	**34.93** 1.375	**20.10** 0.791	**3.20** 0.126	**41.10** 1.618	**36.90** 1.453	**3.91** 0.154	**6.15** 0.242

Millimeters Inches

DTS-B Bronze Connectors

38999 Series III-Style Connectors

Jam Nut Receptacle
Type 24

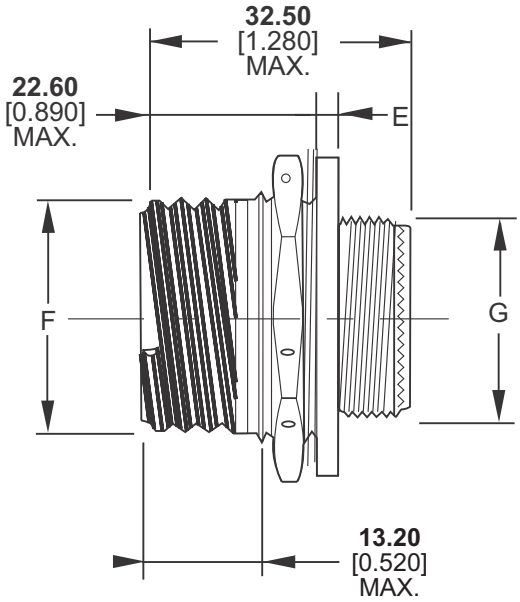

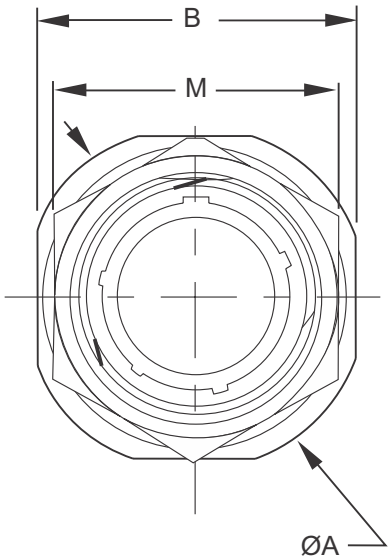

Shell Size	A ±0.3 (±0.012)	B ±0.4 (±0.016)	E +0.07/-0.1 (+0.028/-0.004)	F ±0.1 (±0.004)	G ±0.1 (±0.004)	M
09	**30.20** 1.189	**27.00** 1.063	**2.20** 0.087	**15.75** 0.620	**11.90** 0.469	**21.82** 0.859
11	**34.90** 1.374	**31.80** 1.252	**2.20** 0.087	**18.90** 0.744	**14.90** 0.587	**24.99** 0.984
13	**38.10** 1.500	**34.90** 1.374	**2.20** 0.087	**22.10** 0.870	**17.90** 0.705	**29.77** 1.172
15	**41.30** 1.626	**38.10** 1.500	**2.20** 0.087	**25.25** 0.994	**21.90** 0.862	**32.91** 1.296
17	**44.50** 1.752	**41.30** 1.626	**2.20** 0.087	**29.95** 1.179	**24.90** 0.980	**36.12** 1.422
19	**49.20** 1.937	**46.00** 1.811	**3.00** 0.118	**31.55** 1.242	**27.90** 1.098	**39.25** 1.545
21	**52.40** 2.063	**49.20** 1.937	**3.00** 0.118	**34.70** 1.366	**30.90** 1.217	**42.47** 1.672
23	**55.60** 2.189	**52.40** 2.063	**3.00** 0.118	**37.90** 1.492	**33.90** 1.335	**45.61** 1.796
25	**58.70** 2.311	**55.20** 2.173	**3.00** 0.118	**41.10** 1.618	**36.90** 1.453	**49.25** 1.939

Millimeters Inches

DTS-B Bronze Connectors

38999 Series III-Style Connectors

Plug
Type 26

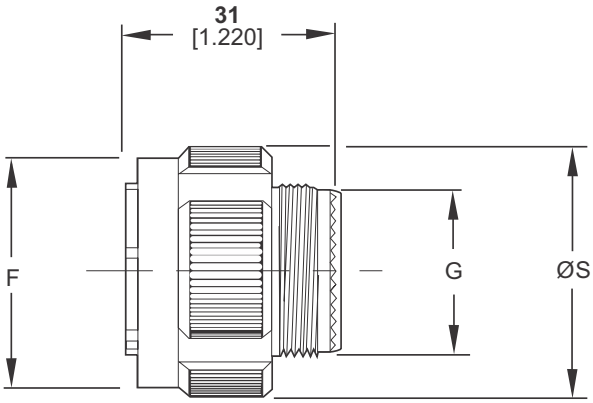

Shell Size	F Max.	G Max.	S Max.
09	**18.40** 0.724	**11.90** 0.469	**21.80** 0.858
11	**21.10** 0.831	**14.90** 0.587	**25.00** 0.984
13	**25.40** 1.000	**17.90** 0.705	**29.40** 1.157
15	**28.70** 1.130	**21.90** 0.862	**32.50** 1.280
17	**32.20** 1.268	**24.90** 0.980	**35.70** 1.406
19	**34.90** 1.374	**27.90** 1.098	**38.50** 1.516
21	**38.10** 1.500	**30.90** 1.217	**41.70** 1.642
23	**41.10** 1.618	**33.90** 1.335	**44.90** 1.768
25	**44.30** 1.744	**36.90** 1.453	**48.00** 1.890

Millimeters Inches

DTS-B Bronze Connectors

38999 Series III-Style Connectors

Panel Cutouts

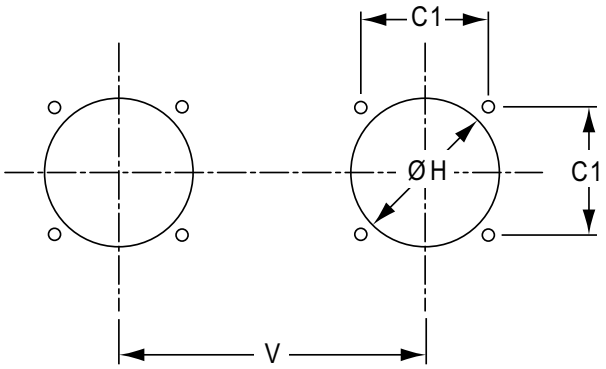

Square Flange Receptacle
(Type 20)

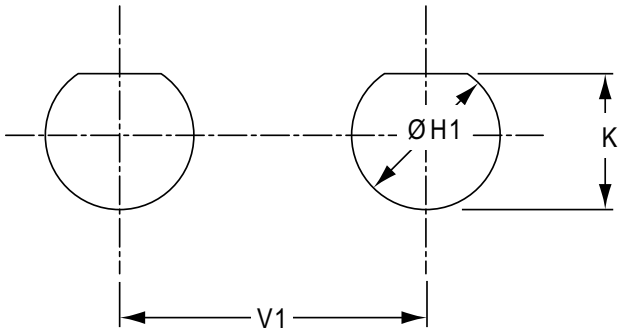

Jam Nut Receptacle
(Type 24)

Shell Size	C1	H Min.		H1 Max.	K Max.	V Min.	V1 Min.
		Front	Rear				
09	**18.26** 0.719	**13.11** 0.516	**16.66** 0.656	**17.70** 0.697	**16.99** 0.669	**24.60** 0.969	**27.80** 1.094
11	**20.62** 0.812	**15.08** 0.594	**22.22** 0.875	**20.88** 0.822	**19.53** 0.769	**27.00** 1.063	**32.60** 1.283
13	**23.01** 0.906	**19.05** 0.750	**23.42** 0.922	**25.58** 1.007	**24.26** 0.995	**30.20** 1.189	**36.00** 1.417
15	**24.61** 0.969	**23.01** 0.906	**26.59** 1.047	**28.80** 1.134	**27.53** 1.084	**33.30** 1.331	**39.60** 1.559
17	**26.97** 1.062	**25.81** 1.106	**30.96** 1.219	**31.98** 1.259	**30.68** 1.208	**36.50** 1.437	**43.30** 1.705
19	**29.36** 1.156	**28.98** 1.141	**32.94** 1.297	**35.15** 1.384	**33.86** 1.333	**39.30** 1.547	**47.00** 1.850
21	**31.75** 1.250	**32.16** 1.266	**36.12** 1.422	**38.28** 1.507	**37.06** 1.459	**42.50** 1.673	**50.60** 1.992
23	**34.93** 1.375	**34.93** 1.375	**39.29** 1.547	**41.50** 1.634	**40.01** 1.575	**45.70** 1.799	**54.20** 2.134
25	**38.10** 1.500	**37.69** 1.484	**42.47** 1.672	**44.68** 1.759	**43.41** 1.709	**48.80** 1.921	**59.70** 2.350

Millimeters Inches

EASY TO USE

- Integrated backshell reduces assembly time
- Single or double knurled areas
- Terminate cable shield directly to the connector for optimal performance

HIGH-TEMPERATURE VERSIONS

- Class K stainless steel
- Temperatures to 200°C
- No costly and heavy backshell
- Connectors cable of receiving a shrink boot or cable overmold

SPACE AND WEIGHT SAVINGS

- Lower profile
- Lighter weight than assemblies with separate backshells

Series III Connectors with Integral Accessory

DEUTSCH DTS Connectors
DEUTSCH DTS Firewall Connectors

DEUTSCH connectors with integral accessory help provide space and weight savings over using a separate backshell. One or two knurled areas help support reliable shield termination with a band strap. The connectors also accept a heat-shrink boot or overmolding.

The connectors are available in aluminum with a variety of finishes or in stainless steel for Class K engine and firewall applications.

DTS Aluminum Connectors

Single Banding Sections

Part Numbering

DTS 24 F 25 R 29 P N

FAMILY
DTS D38999 Series III

SHELL STYLE
20 Square Flange Receptacle
24 Jam Nut Receptacle
26 Plug

CLASS
F Nickel
G Space-Grade Nickel
T PTFE Nickel
W Olive Drab Cadmium
Z Black Zinc Nickel

SHELL SIZE
9, 11, 13, 15, 17, 19, 21, 23, 25

CONFIGURATION
R Banding (Integrated Backshell)

INSERT ARRANGEMENT
See Insert Arrangement Tables, pages 10-17 and 22-23

CONTACTS
P Pin
S Socket

KEYING
N, A, B, C, D, E

Note: If ordering less contacts, please add -6149 to the end of the part number

DTS Aluminum Connectors

Square Flange Receptacle

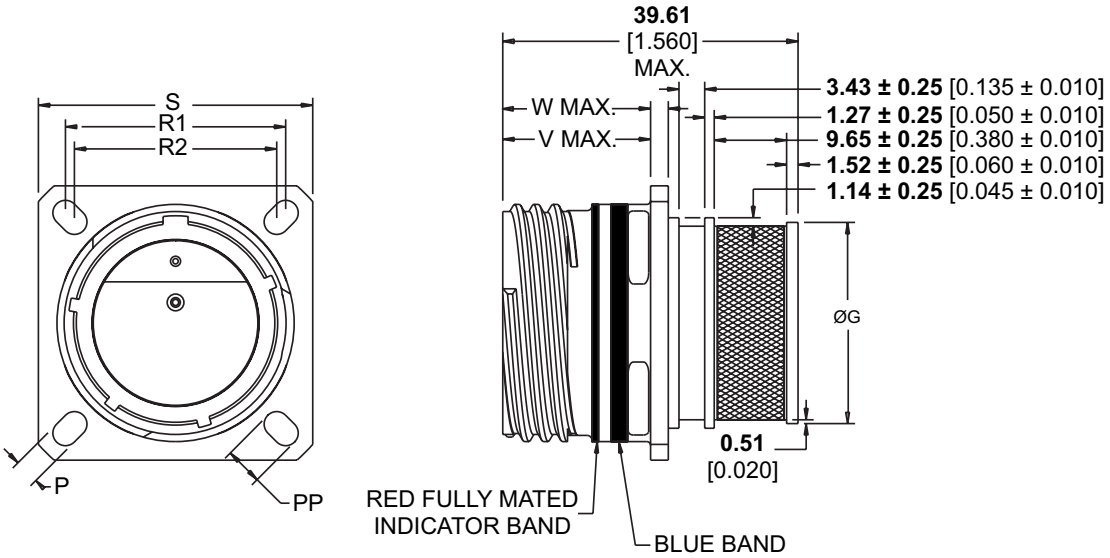

Shell Size	ØG±0.38 ±0.015	V	W	P	PP	R1	R2	S
09	**11.43** 0.450					**18.26** 0.719	**15.09** 0.594	**23.80** 0.937
11	**14.63** 0.576					**20.62** 0.812	**18.26** 0.719	**26.19** 1.031
13	**17.53** 0.690					**23.01** 0.906	**20.62** 0.812	**28.60** 1.126
15	**20.83** 0.820	**20.88** 0.822	**2.49** 0.098	**3.25** 0.128	**4.93** 0.194	**24.61** 0.969	**23.01** 0.906	**30.99** 1.220
17	**23.83** 0.938					**26.97** 1.062	**24.61** 0.969	**33.30** 1.311
19	**26.82** 1.056					**29.36** 1.156	**26.97** 1.062	**36.50** 1.437
21	**29.82** 1.174					**31.75** 1.250	**29.36** 1.156	**39.70** 1.563
23	**32.82** 1.292	**20.09** 0.791	**3.20** 0.126	**3.91** 0.154	**6.15** 0.242	**34.93** 1.375	**31.75** 1.250	**42.90** 1.689
25	**35.81** 1.410					**38.10** 1.500	**34.93** 1.375	**46.00** 1.811

Millimeters Inches

DTS Aluminum Connectors

Jam Nut Receptacle

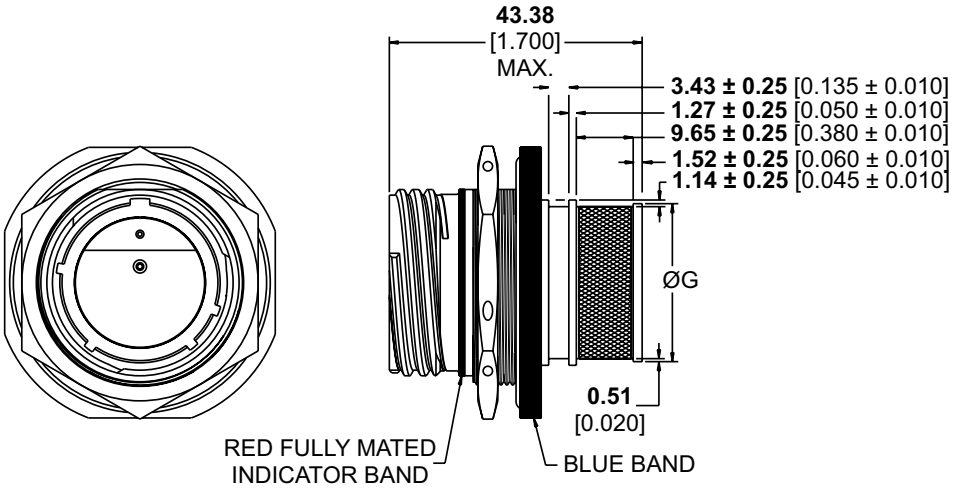

Shell Size	ØG ±0.38 ±0.015
09	**11.43** 0.450
11	**14.63** 0.576
13	**17.53** 0.690
15	**20.83** 0.820
17	**23.83** 0.938
19	**26.82** 1.056
21	**29.82** 1.174
23	**32.82** 1.292
25	**35.81** 1.410

Millimeters Inches

DTS Aluminum Connectors

Plug

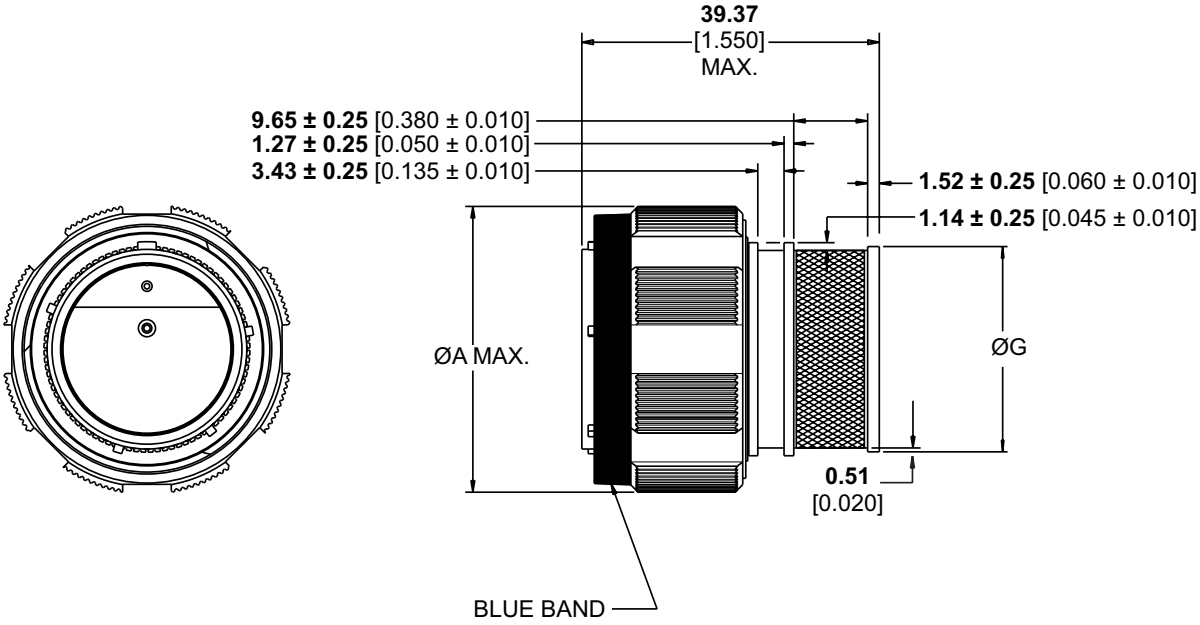

Shell Size	A	ØG ±0.38 ±0.015
09	**21.79** 0.858	**11.43** 0.450
11	**24.99** 0.984	**14.63** 0.576
13	**29.39** 1.157	**17.53** 0.690
15	**32.49** 1.279	**20.83** 0.820
17	**35.69** 1.405	**23.83** 0.938
19	**38.48** 1.515	**26.82** 1.056
21	**41.68** 1.641	**29.82** 1.174
23	**44.91** 1.768	**32.82** 1.292
25	**47.98** 1.889	**35.81** 1.410

Millimeters Inches

DTS-K Stainless Steel Firewall Connectors

Double Banding Sections

Part Numbers

xx = Insert Arrangement Code from dimensions table on next page

Polarization	Plug		Square Flange Receptacle		Jam Nut Receptacle	
	Pin Contact	Socket Contact	Pin Contact	Socket Contact	Pin Contact	Socket Contact
N	781-8037-xx	781-8057-xx	781-8060-xx	781-8070-xx	781-8043-xx	781-8049-xx
A	781-8131-xx	781-8141-xx	781-8061-xx	781-8071-xx	781-8044-xx	781-8050-xx
B	781-8132-xx	781-8142-xx	781-8062-xx	781-8072-xx	781-8045-xx	781-8051-xx
C	781-8133-xx	781-8143-xx	781-8063-xx	781-8073-xx	781-8046-xx	781-8052-xx
D	781-8134-xx	781-8144-xx	781-8064-xx	781-8074-xx	781-8047-xx	781-8053-xx
E	781-8135-xx	781-8145-xx	781-8065-xx	781-8075-xx	781-8048-xx	781-8054-xx

Square Flange Receptacle

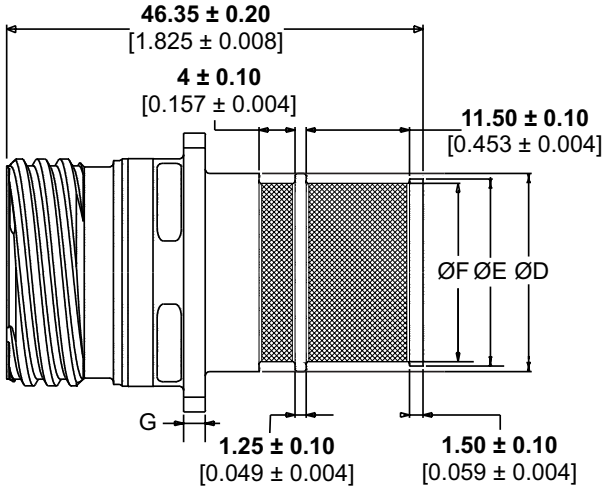

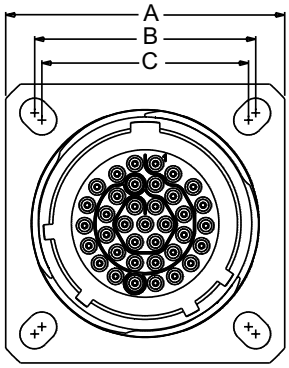

DTS-K Stainless Steel Firewall Connectors

Double Banding Sections

Insert Code	Size - Insert	A ±0.3 ±0.012	B ±0.10 ±0.005	C ±0.10 ±0.004	ØD ±0.12 ±0.005	ØE ±0.05 ±0.002	ØF ±0.05 ±0.002	G Max.
03	09-35	**23.80** 0.937	**18.26** 0.719	**15.09** 0.594	**12.06** 0.475	**11.43** 0.450	**10.46** 0.412	**2.50** 0.098
05	09-98							
10	11-35	**28.60** 1.126	**23.01** 0.906	**18.26** 0.719	**15.06** 0.593	**14.63** 0.576	**13.67** 0.538	
11	11-98							
12	11-99							
14	13-08			**20.62** 0.812	**18.08** 0.712	**17.53** 0.690	**16.56** 0.652	
16	13-35							
17	13-98							
18	15-05	**31.00** 1.220	**24.61** 0.969	**23.01** 0.906	**22.07** 0.869	**20.83** 0.820	**19.86** 0.782	
20	15-18							
21	15-19							
22	15-35							
24	15-97							
25	17-06	**33.30** 1.311	**26.97** 1.062	**24.61** 0.969	**25.07** 0.987	**23.83** 0.938	**22.86** 0.900	
26	17-08							
27	17-26							
28	17-35							
31	19-11	**36.50** 1.437	**29.36** 1.156	**26.97** 1.062	**28.07** 1.105	**26.83** 1.056	**25.86** 1.018	
34	19-32							
46	21-39	**39.70** 1.563	**31.75** 1.250	**29.36** 1.156	**31.06** 1.223	**29.82** 1.174	**28.91** 1.138	**3.20** 0.126
47	21-41							
55	23-53	**42.90** 1.689	**34.93** 1.375	**31.75** 1.250	**34.06** 1.341	**32.82** 1.292	**31.85** 1.254	
61	25-04	**46.00** 1.811	**38.10** 1.500	**34.93** 1.375	**37.06** 1.459	**35.81** 1.410	**34.85** 1.372	
65	25-35							
68	25-61							

Millimeters Inches

DTS-K Stainless Steel Firewall Connectors

Double Banding Sections

Plug

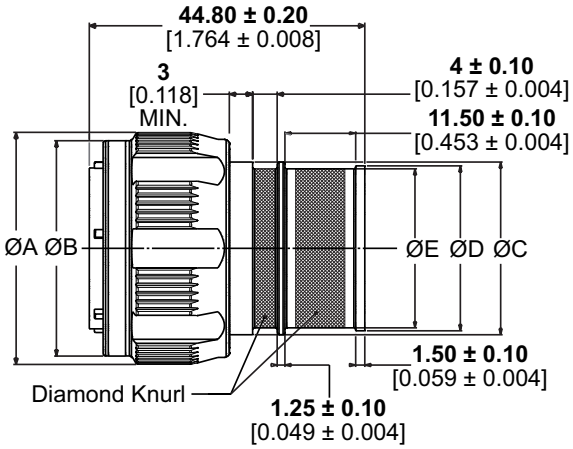

Insert Code	Size - Insert	ØA Max.	ØB Max.	ØC ±0.12 ±0.005	ØD ±0.05 ±0.002	ØE ±0.05 ±0.002
03	09-35	**21.80** 0.858	**18.60** 0.732	**12.06** 0.475	**11.43** 0.450	**10.46** 0.412
05	09-98					
10	11-35	**25.0** 0.984	**21.30** 0.839	**15.06** 0.593	**14.63** 0.576	**13.67** 0.538
11	11-98					
14	13-08	**29.40** 1.157	**25.60** 1.008	**18.08** 0.712	**17.53** 0.690	**16.56** 0.652
16	13-35					
17	13-98					
18	15-05	**32.50** 1.280	**28.90** 1.138	**22.07** 0.869	**20.83** 0.820	**19.86** 0.782
20	15-18					
21	15-19					
22	15-35					
24	15-97					
25	17-06	**35.70** 1.406	**32.40** 1.276	**25.07** 0.987	**23.83** 0.938	**22.86** 0.900
26	17-08					
27	17-26					
28	17-35					
31	19-11	**38.50** 1.516	**35.10** 1.382	**28.07** 1.105	**26.83** 1.056	**25.86** 1.018
34	19-32					
35	19-35					
45	21-35	**41.70** 1.642	**38.30** 1.508	**31.06** 1.223	**29.82** 1.174	**28.91** 1.138
46	21-39					
47	21-41					
55	23-53	**44.90** 1.768	**41.30** 1.626	**34.06** 1.341	**32.82** 1.292	**31.85** 1.254
61	25-04	**48.00** 1.890	**44.50** 1.752	**37.06** 1.459	**35.81** 1.410	**34.85** 1.372
65	25-35					
68	25-61					

Millimeters Inches

DTS-K Stainless Steel Firewall Connectors

Single Banding Sections

Part Numbers

xx = Insert Arrangement Code from dimensions table on next page

Polarization	Plug		Square Flange Receptacle		Jam Nut Receptacle	
	Pin Contact	Socket Contact	Pin Contact	Socket Contact	Pin Contact	Socket Contact
N	781-8130-xx	781-8010-xx	781-8020-xx	781-8030-xx	781-8043-xx	781-8049-xx
A	781-8131-xx	781-8011-xx	781-8021-xx	781-8031-xx	781-8044-xx	781-8050-xx
B	781-8132-xx	781-8012-xx	781-8022-xx	781-8032-xx	781-8045-xx	781-8051-xx
C	781-8133-xx	781-8013-xx	781-8023-xx	781-8033-xx	781-8046-xx	781-8052-xx
D	781-8134-xx	781-8014-xx	781-8024-xx	781-8034-xx	781-8047-xx	781-8053-xx
E	781-8135-xx	781-8015-xx	781-8025-xx	781-8035-xx	781-8048-xx	781-8054-xx

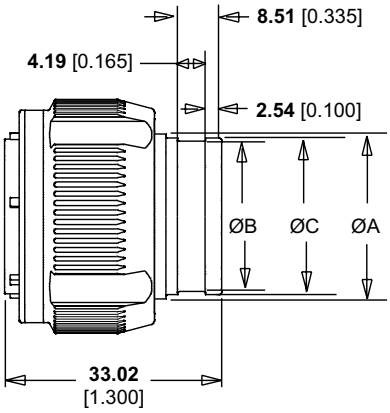

Plug

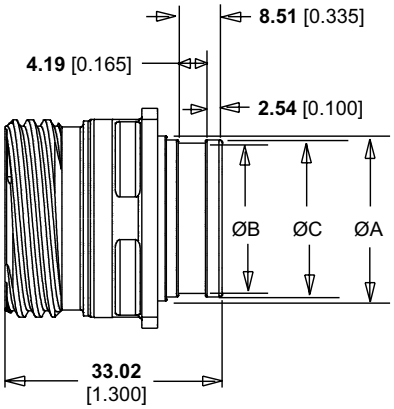

Square Flange Receptacle

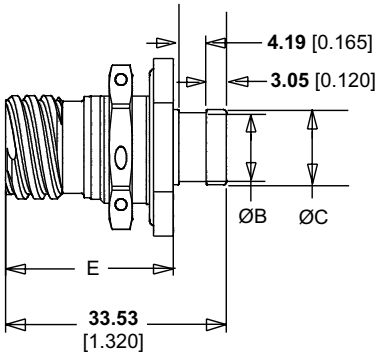

Jam Nut Receptacle

DTS-K Stainless Steel Firewall Connectors

Insert Code (xx)	Size - Insert	ØA ±0.12 ±0.005	ØB ±0.05 ±0.002	ØC ±0.05 ±0.002	ØD Min.	E Max.
03	9-35	**12.06** 0.475	**10.46** 0.412	**11.43** 0.450	**13.46** 0.530	**25.60** 1.008
05	9-98					
11	11-98	**15.06** 0.593	**13.67** 0.538	**14.63** 0.576	**TBD**	**TBD**
14	13-8	**18.08** 0.712	**16.56** 0.652	**17.53** 0.690		
17	13-98					
18	15-05	**22.07** 0.869	**19.86** 0.782	**20.83** 0.820	**22.86** 0.900	**25.60** 1.008
20	15-18					
21	15-19					
25	17-6	**25.07** 0.987	**22.86** 0.900	**23.83** 0.938	**25.86** 1.018	
26	17-8					
27	17-26					
31	19-11	**28.07** 1.105	**25.86** 1.018	**26.82** 1.056	**TBD**	**TBD**
34	19-32					
46	21-39	**31.06** 1.223	**28.91** 1.138	**29.82** 1.174		
47	21-41					
55	23-53	**34.06** 1.341	**31.85** 1.254	**32.82** 1.292		
61	25-04	**37.06** 1.459	**34.85** 1.372	**35.81** 1.410		
68	25-61					

Millimeters Inches

ROBUST

- Signal and power contacts in same housing
- Up to four 150 A or one 300 A high-current contacts
- Threaded coupling with self-locking mechanism for anti-vibration
- 100% scoop-proof design

RELIABLE

- Excellent contact retention under severe vibration
- Dedicated sealed backfitting and cable support grommet
- Interfacial sealing helps provide protection against aggressive fluid and dust ingress

EMI PROTECTION

- RFI/EMI shielding fingers at mating interface

EASY TO USE

- Rear removable crimp contacts
- Standard AS39029 Size 20 contacts for signals
- Space saving with integral power and signal wires

DTS-HC High-Current Connectors

38999 Series III-Style Connectors

DEUTSCH DTS-HC high-current circular connectors provide power connections in the familiar 38999 form factor. They are optimized for use in harsh high-vibration environments where space is at a premium.

With integral power and signal wires in some configurations, the connectors also help save space and give you a variety of versatile contact termination options.

Rated to 175°C, DTS-HC connectors are the rugged choice for high-temperature applications. In addition, interfacial sealing helps provide protection from dust and aggressive fluids, while shielding fingers at the mating interface provide excellent EMI and RFI protection.

Specifications

MATERIALS

- **Shell/Coupling Ring:** High-strength aluminum alloy
- **Plating:** Nickel (standard), olive drab cadmium, or zinc cobalt
- **Insulators:** High-performance thermoplastic
- **Seals:** Fluorinated silicone
- **Contacts:** Gold-plated copper alloy

ENVIRONMENTAL/MECHANICAL

- **Temperature:** -65°C to +175°C
- **Vibration:** Random, 50-2000 Hz, 5 g^2/Hz (per MIL-DTL-38999)
- **Dielectric Withstand Voltage:** 1500 VAC
- **Insulation Resistance:** 5000 MΩ min., 500 VDC,
- **Durability:** 500 mating cycles
- **Altitude:** 30,000 m (100,000 ft.) max.

CURRENT RATING, CONTINUOUS

- **Size 00 Contact:** 300 A
- **Size 4 Contact:** 150 A
- **Size 20 Contact:** 7.5 A

POWER CABLE CONDUCTOR TYPE

- **Size 4:** 4 AWG, 8 mm^2, 16 mm^2 and 25 mm^2 conductor
- **Size 00:** 70 mm^2

CONFIGURATIONS

- **Size 21 Shell:** 2 Size 4 power contacts
- **Size 23 Shell:** 1 Size 00 power contact
- **Size 23 Shell:** 2 Size 4 power contacts and 3 Size 20 contacts
- **Size 25 Shell:** 4 Size 4 power contacts and 4 Size 20 contacts

DTS-HC High-Current Connectors

38999 Series III-Style Connectors

Insert Arrangements

21-240
2 Size 4 Contacts

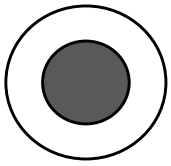

23-100
One Size 00 Contact

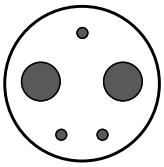

23-24320
2 Size 4 Contacts
3 Size 20 Contacts

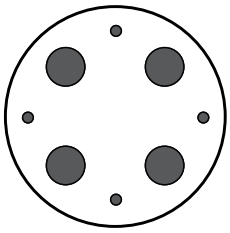

25-44420
4 Size 4 Contacts
4 Size 20 Contacts

Part Numbering

DTS 26 F 23-24320 P N - 025

FAMILY

SHELL STYLE
20 Square Flange Receptacle
24 Jam Nut Receptacle
26 Free Plug

FINISH
F Nickel
W Olive Drab Cadmium
Z Black Zinc Nickel
U Zinc Cobalt

SHELL SIZE/ ARRANGEMENT
21-240
23-100
23-24320
25-44420

CONTACT (CONDUCTOR SIZE)
25 25 mm^2 (Ø7.33 mm max)
16 16 mm^2 (Ø5.48 mm max)
08 8 mm^2 (Ø4.50 mm max)
04 4 AWG (Ø6.8 mm max)
S prefix = Split Finger Socket
O prefix = Pin
— Hyperboloid Socket (consult TE for availability)

KEYWAY
N Normal
A, B

CONTACT TYPE
P Pin **A** Less Pin Contacts
S Socket **B** Less Socket Contacts

DTS-HC High-Current Connectors

38999 Series III-Style Connectors

Square Flange Receptacle
Type 20

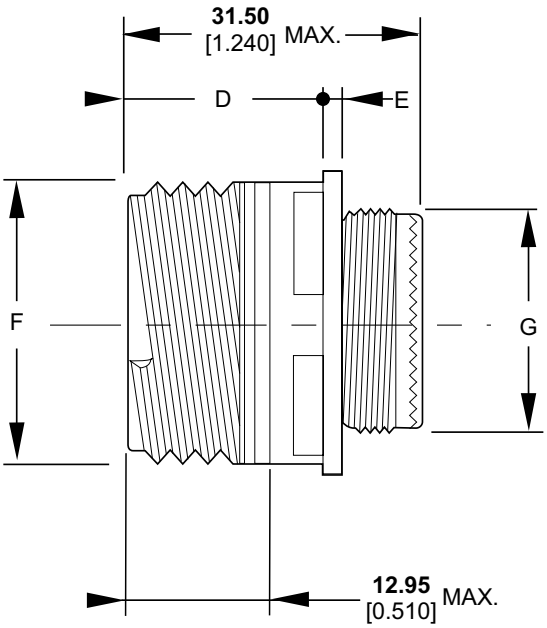

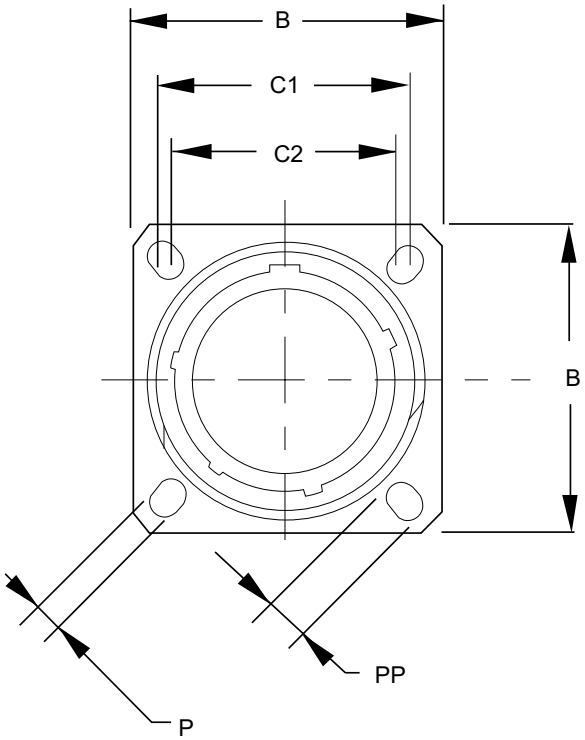

Shell Size	B	C1	C2	D Max.	E Max.	F	G	P	PP
21	**39.70** 1.563	**31.75** 1.250	**29.36** 1.156	**20.10** 0.791	**3.20** 0.126	**34.70** 1.366	**30.90** 1.217	**3.25** 0.128	**4.93** 0.194
23	**42.90** 1.689	**34.93** 1.375	**31.75** 1.250	**20.10** 0.791	**3.20** 0.126	**37.90** 1.492	**33.90** 1.335	**3.91** 0.154	**6.15** 0.242
25	**46.00** 1.811	**38.10** 1.500	**34.93** 1.375	**20.10** 0.791	**3.20** 0.126	**41.10** 1.618	**36.90** 1.453	**3.91** 0.154	**6.15** 0.242

Millimeters Inches

DTS-HC High-Current Connectors

38999 Series III-Style Connectors

Jam Nut Receptacle
Type 24

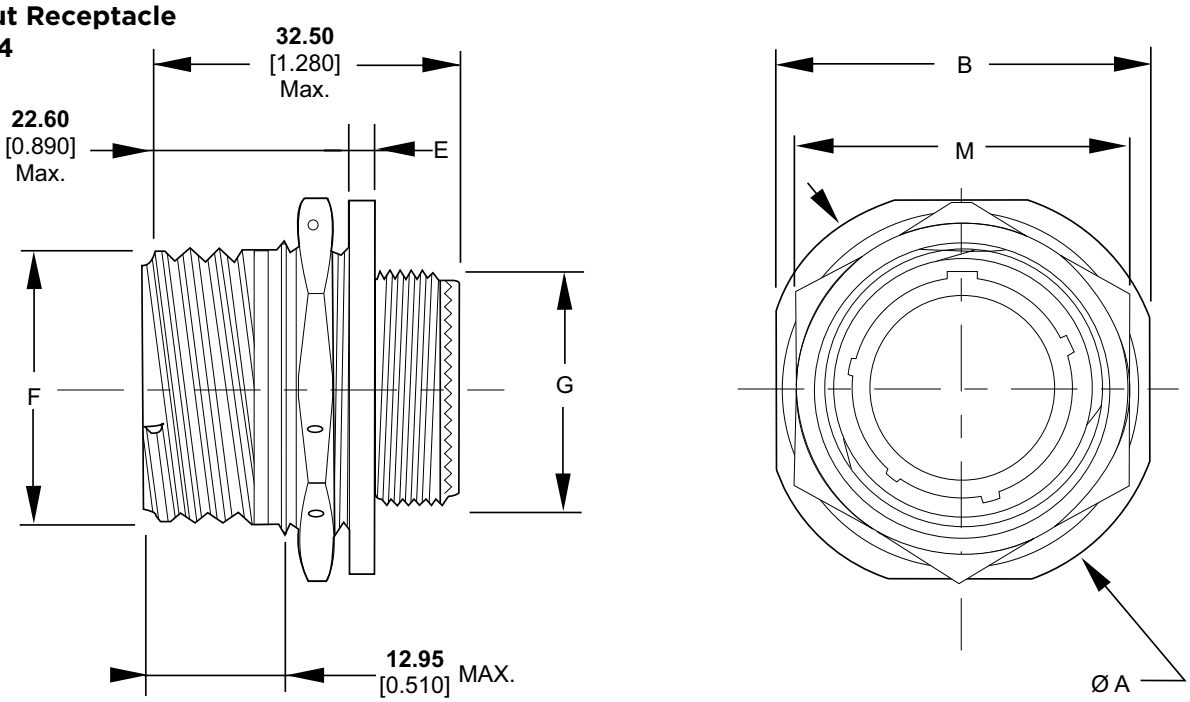

Shell Size	A	B	E Max.	F	G	M Max.
21	**52.40** 2.063	**49.20** 1.937	**3.99** 0.157	**34.70** 1.366	**30.90** 1.217	**46.00** 1.811
23	**55.60** 2.189	**52.40** 2.063	**3.00** 0.118	**37.90** 1.492	**33.90** 1.335	**50.00** 1.969
25	**58.70** 2.311	**55.60** 2.189	**3.00** 0.118	**41.10** 1.618	**36.90** 1.453	**51.23** 2.017

Millimeters Inches

Plug
Type 26

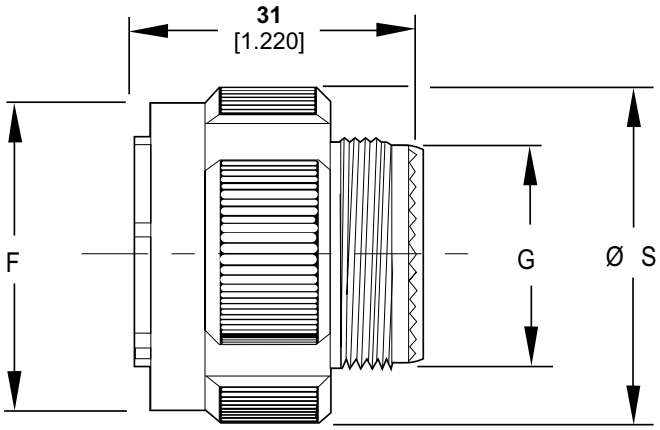

Shell Size	F Max.	G	S Max.	Mass (g)
21	**38.10** 1.500	**30.90** 1.217	**41.70** 1.642	**55**
23	**41.10** 1.618	**33.90** 1.335	**44.90** 1.768	**67**
25	**44.30** 1.744	**36.90** 1.453	**48.00** 1.890	**71**

Millimeters Inches

DTS-HC High-Current Connectors

38999 Series III-Style Connectors

Contacts

Contact Size	Conductor	Pin	Socket	Crimp Tool	Dieset or Positioner	Contact Removal Tool
20	24 - 20	38941-20	38943-20	M22520/2-01	M22520/2-10	M81969/14-10
8	6 mm²	611091	611089	M22520/23-01	M22520/23-09	611218
	14 mm²	605345-01-31	605344	Consult TE for Tooling		
4	4 AWG	611102	611103	D51	31040	610136-TOOL
	25 mm²	605660	611103-025			
	16 mm²	605734	611103-016			
	8 mm²	611102	611103	M22520/23-01 or D51	M22520/23-11	610136-TOOL
00	70 mm²	610304	601365	Consult TE for Tooling		
00 Bus Bar	**	610364	610299	—	—	—

** Consult TE

HIGH PERFORMANCE

- Up to 1000 A capability
- Rugged 38999-style connector and shell systems
- Rated -65°C to +175°C

CONVENIENT

- Variety of shell sizes
- Choose from straight or 90° configurations
- Threaded coupling and screened crimp termination options

EASY ASSEMBLY

- Simple adjustment of angled backshells (no special tooling)
- Low mating force
- Conductive jam nut O-ring option available

POLAMCO High-Power Connectors

38999-Style Connectors for Harsh Military Environments

The POLAMCO high-power connector family provides a simple and effective way of terminating power cables in a harsh environment military connector system.

POLAMCO high-power connectors are optimized for cable sizes ranging from 50 mm^2 up to 240 mm^2, and are available in shell sizes 19 through 25, depending on the cable being terminated.

Rated to 175°C, these high-power MIL-DTL-38999 Series I and III-style connector systems give you a variety of versatile options including threaded termination or a screened crimp, with straight or 90° orientation.

Specifications

MATERIALS

- **Shell:** High-strength aluminum alloy, nickel aluminum bronze, or stainless steel
- **Contact Body:** Silver-plated copper alloy
- **Seals:** Silicone elastomer
- **Insulators:** Thermoplastic: PPS-GL40, UL94V-0
- **Plating Finishes:**
  Olive drab cadmium
  Black zinc nickel
  Electroless nickel
  Zinc cobalt
  (Contact TE for additional finishes)

Plating Code	Plating Description	RoHS Compliant	Environmental Protection Conductivity
B	Olive drab cadmium (5-10 µm) QQ-P-416, Type II, Class 3 over electroless nickel	No	500 hours salt spray
C	Electroless nickel, AMS-C-26047, Class 4, Grade B	Yes	48 hours salt spray
ZB	Zinc cobalt (5-10 µm) over electroless nickel (2.5-7.5 µm) with an olive drab chromate conversion	Yes	350 hours salt spray
ZN	Passivated black zinc nickel (5-12 µm) over electroless nickel (8-12 µm), ASTM B 841 Class 1	Yes	500 hours salt spray
ZK	Zinc cobalt (5-10 µm) over electroless nickel (2.5-7.5 µm) with a black chromate conversion	Yes	500 hours salt spray

ELECTRICAL

- **Voltage:** 1800 VAC / 60 Hz (service rating 1)
- **Shell Continuity:** <5 mΩ
- **Current Rating (Approx. @ 40°C ambient):**
  Shell Size 25: 1000 A, <22 µΩ
  Shell Size 23: 800 A, <25 µΩ
  Shell Size 21: 600 A, <30 µΩ
  Shell Size 19: 400 A, <38 µΩ
- **Contact Resistance (Approx. @ 40°C ambient):**
  Shell Size 25: <22 µΩ
  Shell Size 23: <25 µΩ
  Shell Size 21: <30 µΩ
  Shell Size 19: <38 µΩ

ENVIRONMENTAL/MECHANICAL

- **Durability:** 500 mating cycles
- **Vibration:** 6 hours in 3 axis, full current load (Def-Stan 0035)
- **Shock:** 500 m/s², 11 ms half sine
- **Temperature:** -65°C to +175°C
- **Sealing:** IP68 (2 m for 0.5 hour)
- **Salt Spray:** Up to 500 hours (depending on material/finish)

CRIMP CONTACT CURRENT DE-RATING

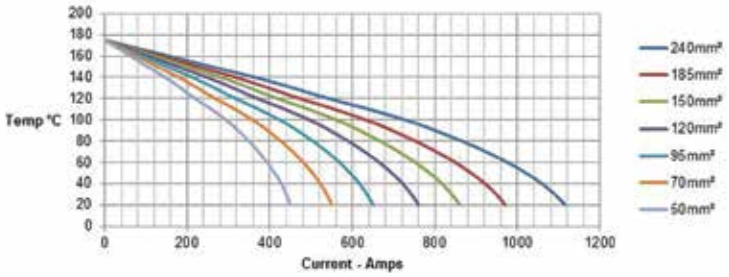

POLAMCO High-Power Connectors

Part Numbering

PC4 20HP(AT) - BT 1 - 25 - 185 FS - S N - 1-C - L13

SERIES

SHELL STYLE
- **20HP** Screened Backshell
- **24HP** Extra Long, 90°
- **26HP** Female Thread
- **20HPBF** Male Thread
- **24HPBF** Bulkhead Feedthrough
- **AT** Extra Large Bulkhead Feedthrough

REAR TERMINATION
- **BT** Screened Backshell
- **F** Female Threaded
- **M** Male Threaded Post (also available)

ANGLE ENTRY
(Does not apply to threaded contacts)
- **1** Straight
- **3** 90°
- **69** IP69K Straight Entry

SHELL SIZE

CRIMP BARREL
(Does not apply to threaded contacts)
240, 185, 120 etc.

OPTIONAL PANEL THICKNESS (mm)
Omit for standard

MATERIAL AND FINISH

KEY ARRANGEMENT
N, A, B, C, D, E

CONTACT TYPE
- **P** Pin
- **S** Socket
- **H3** 90° Crimp

CABLE STRANDING
- **FS** Fine Stranding (Hi Flex)
- **S** Standard Stranding

Material Description Codes

Material Code	Material Description
1	Aluminum Alloy 6262 / 6082
2	Nickel Aluminum Bronze DGS 1043 / NES 833 (Marine Applications)
4	Stainless Steel 303 S31 / 304
46	Stainless Steel 316

POLAMCO High-Power Connectors

Shielded Straight Plugs

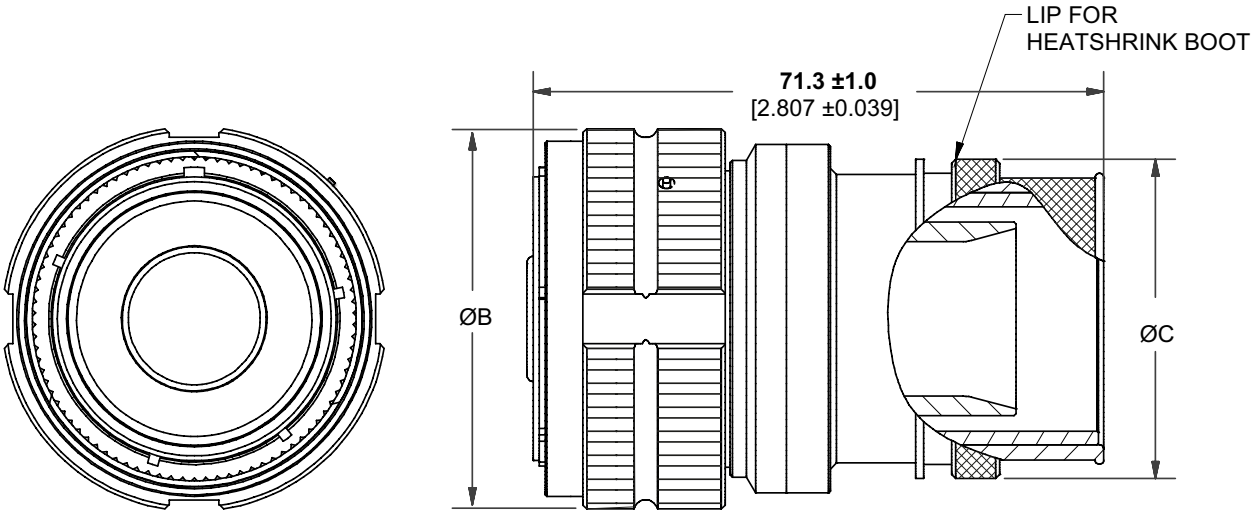

Shell Size	ØB Max.	ØC Max.
19	**38.50** 1.516	**27.60** 1.087
21	**41.70** 1.642	**31.10** 1.224
23	**44.90** 1.768	**36.00** 1.417
25	**48.00** 1.890	**39.84** 1.569

Millimeters Inches

POLAMCO High-Power Connectors

Shielded Right-Angle Plugs

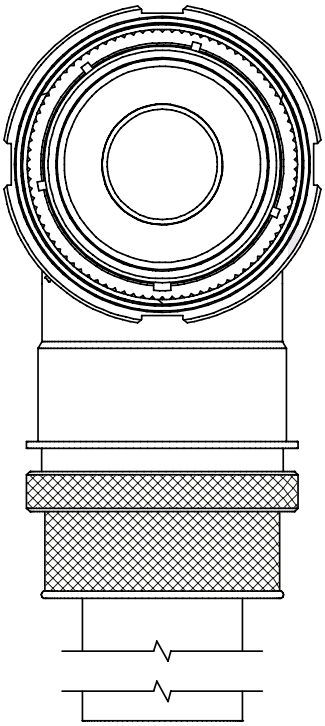

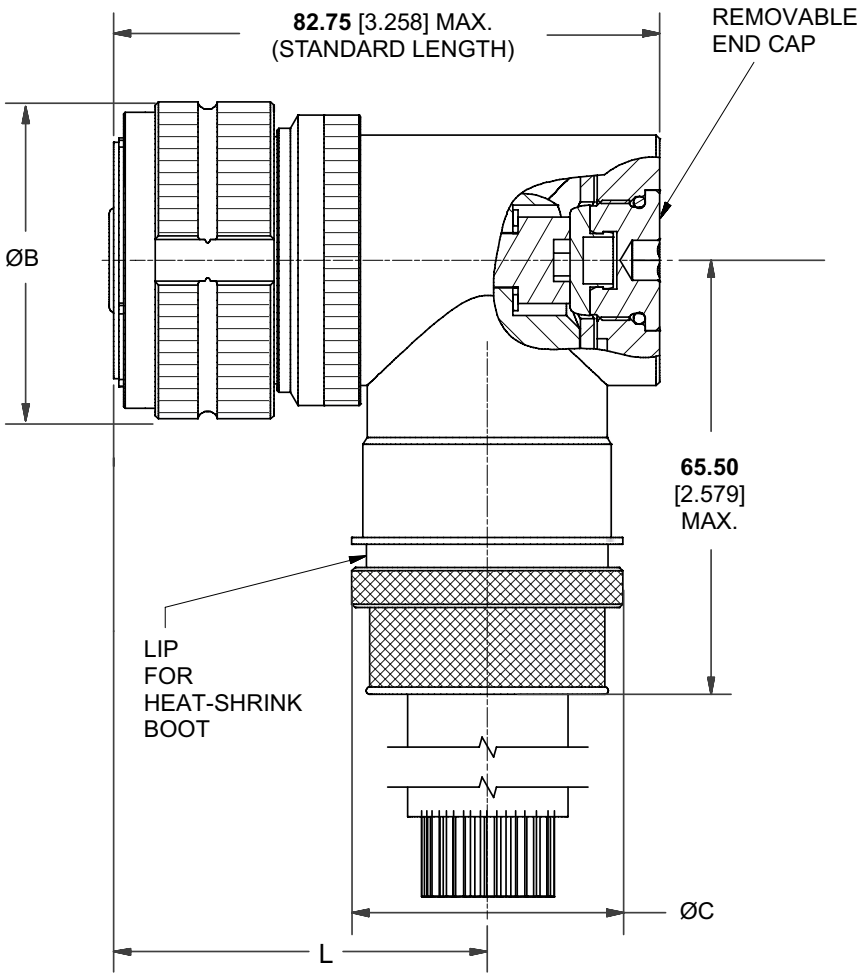

Shell Size	ØB Max.	ØC Max.	L	
			Standard	Extended
19	**38.50** 1.516	**31.60** 1.244	**52.00** 2.047	**98.0** 3.858
21	**41.70** 1.642	**34.50** 1.358	**54.00** 2.126	**103.0** 4.055
23	**44.90** 1.768	**38.50** 1.516	**56.00** 2.205	**108.0** 4.252
25	**48.00** 1.890	**40.64** 1.600	**56.00** 2.205	**112.0** 4.409

Millimeters Inches

POLAMCO High-Power Connectors

Shielded Jam Nut Receptacle

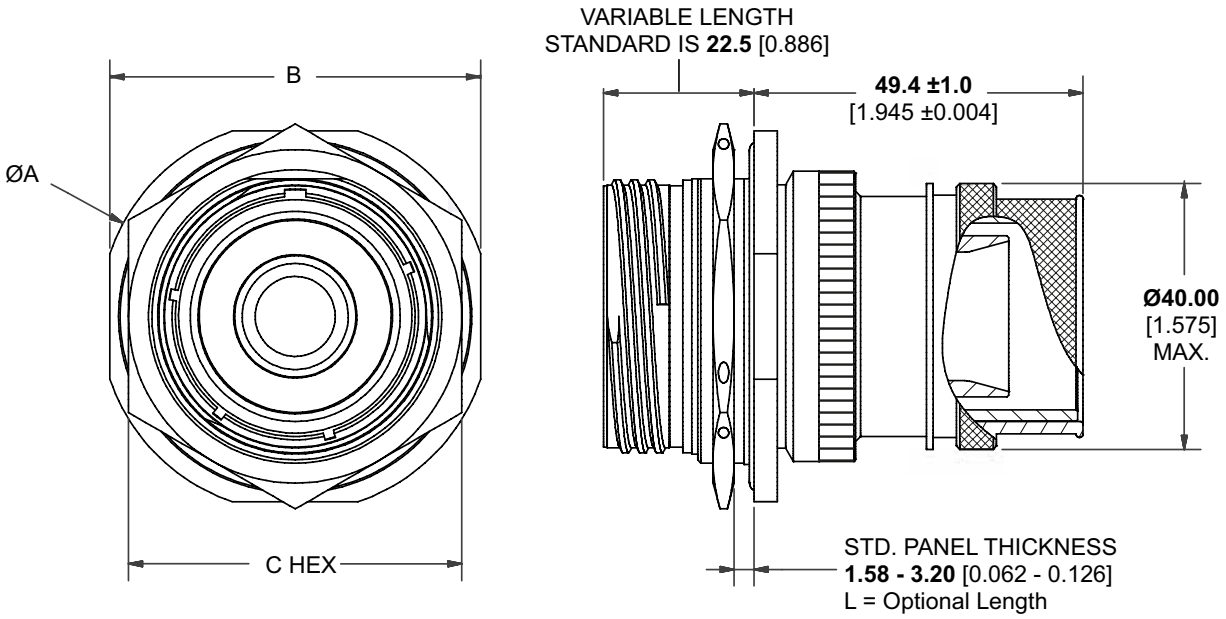

Shell Size	A	B	C	E	F	G
19	**49.20** 1.937	**46.00** 1.811	**40.00** 1.575	**35.18** 1.385	**33.91** 1.335	**27.60** 1.087
21	**52.40** 2.063	**49.20** 1.937	**43.00** 1.693	**38.35** 1.510	**37.08** 1.460	**31.10** 1.224
23	**55.60** 2.189	**52.40** 2.063	**46.00** 1.811	**41.53** 1.635	**40.26** 1.585	**36.00** 1.417
25	**58.70** 2.311	**55.60** 2.189	**50.00** 1.969	**44.70** 1.760	**43.43** 1.710	**39.84** 1.569

Millimeters Inches

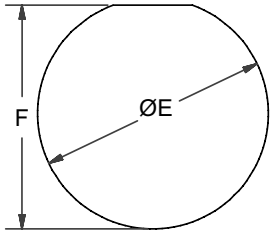

RECOMMENDED PANEL CUTOUT

POLAMCO High-Power Connectors

Shielded Square Flange Receptacle

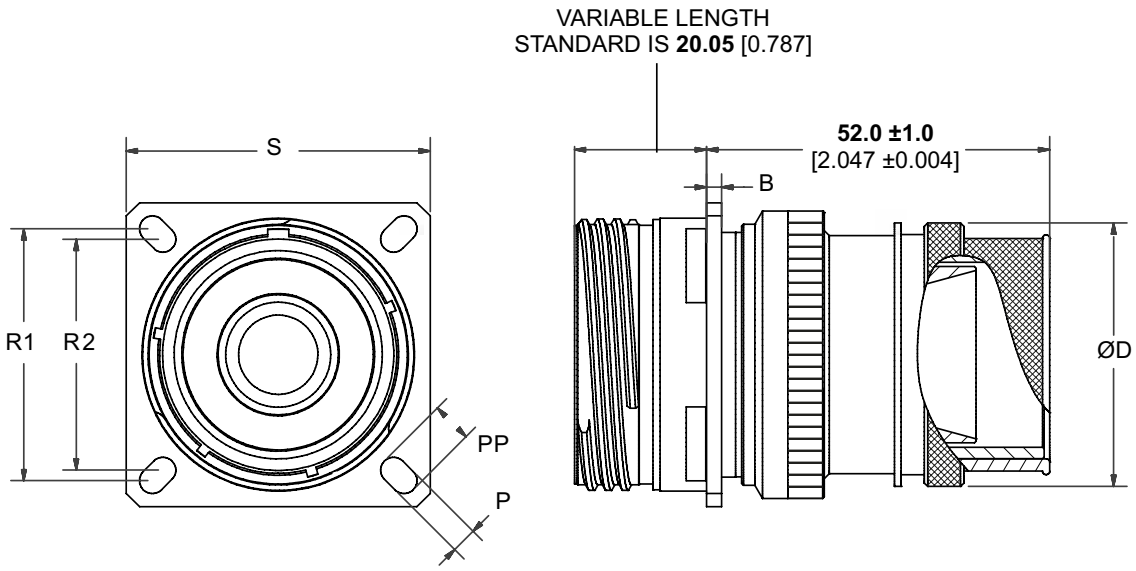

Shell Size	B	D	P	PP	R1	R2	S
19	**2.30** 0.091	**27.60** 1.087	**3.25** 0.128	**4.93** 0.194	**29.36** 1.156	**26.97** 1.062	**36.50** 1.437
21	**3.00** 0.118	**31.10** 1.224	**3.25** 0.128	**4.93** 0.194	**31.75** 1.250	**29.36** 1.156	**39.70** 1.563
23	**3.00** 0.118	**36.00** 1.417	**3.91** 0.154	**6.15** 0.242	**34.93** 1.375	**31.75** 1.250	**42.90** 1.689
25	**3.00** 0.118	**39.84** 1.569	**3.91** 0.154	**6.15** 0.242	**38.10** 1.500	**34.93** 1.375	**46.00** 1.811

Millimeters Inches

POLAMCO High-Power Connectors

Unshielded Jam Nut Receptacle

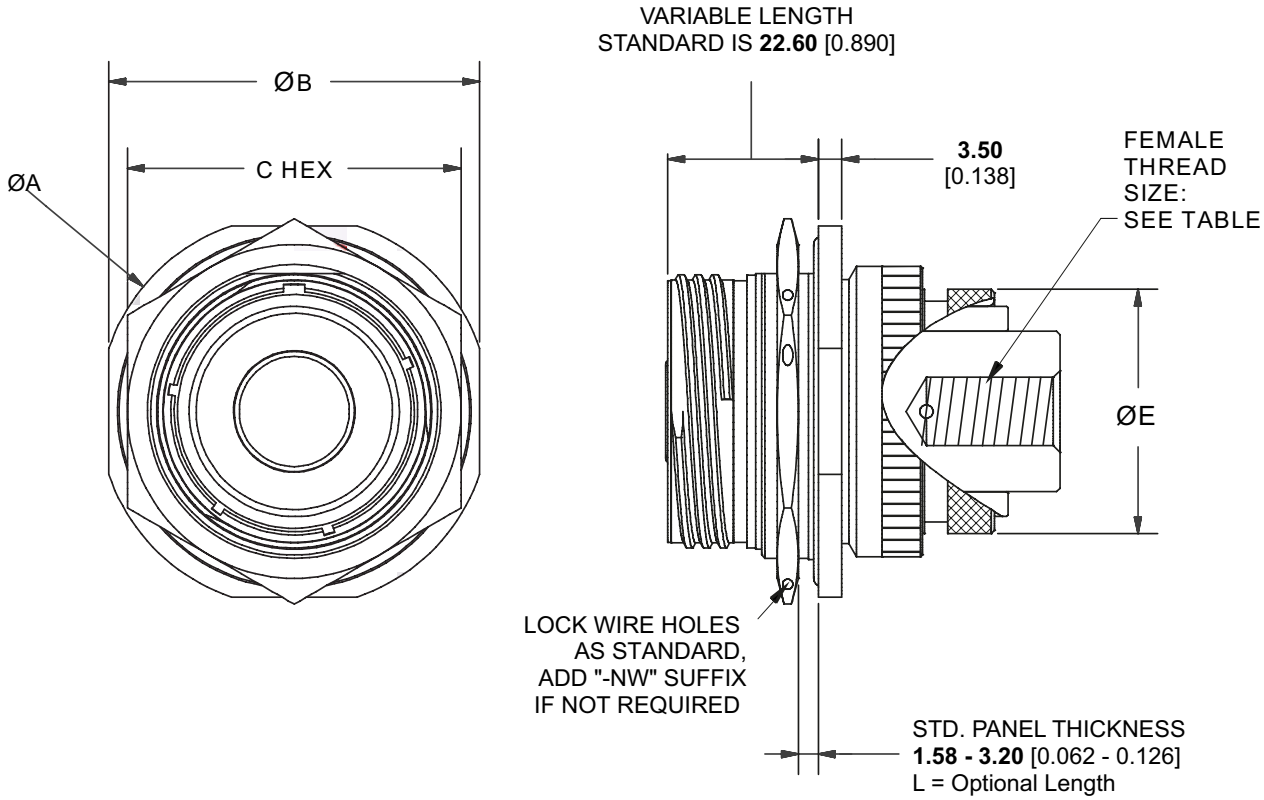

Shell Size	A	B	C	E	F	G	Female Thread Size
19	**49.20** 1.937	**46.00** 1.811	**40.00** 1.575	**35.18** 1.385	**26.50** 1.043	**33.91** 1.335	M8
21	**52.40** 2.063	**49.20** 1.937	**43.00** 1.693	**38.35** 1.510	**31.00** 1.220	**37.08** 1.460	M10
23	**55.60** 2.189	**52.40** 2.063	**46.00** 1.811	**41.53** 1.635	**34.40** 1.354	**40.26** 1.585	M10
25	**58.70** 2.311	**55.60** 2.189	**50.00** 1.969	**44.70** 1.760	**36.60** 1.441	**43.43** 1.710	M12

Millimeters Inches

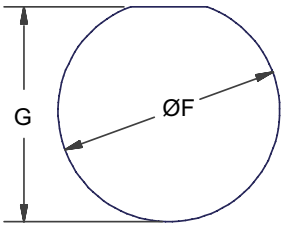

RECOMMENDED
PANEL CUTOUT

POLAMCO High-Power Connectors

Unshielded Square Flange Receptacle

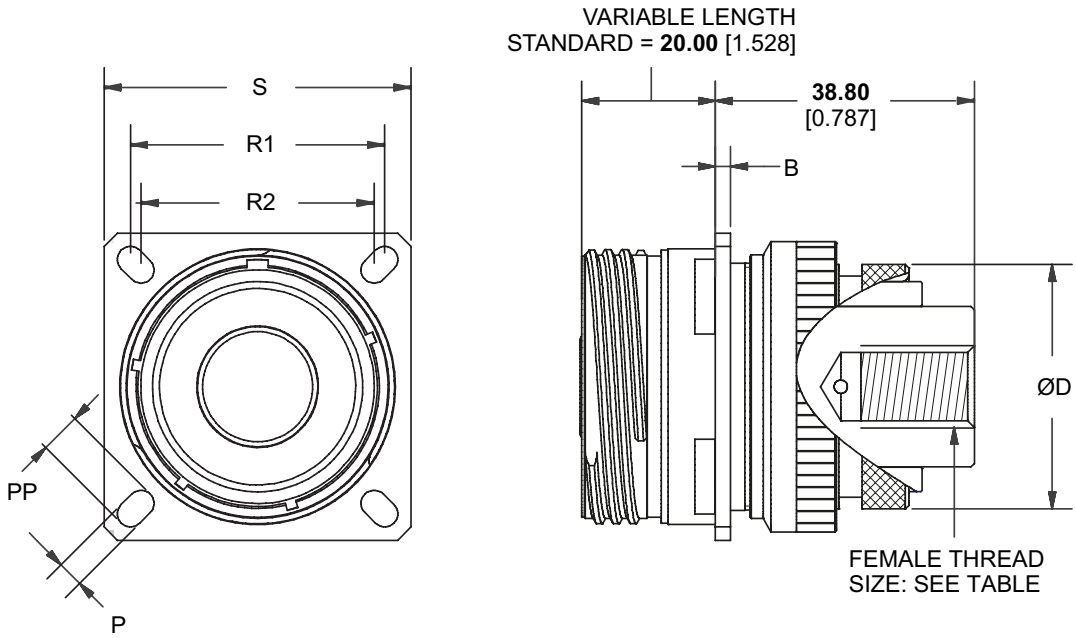

Shell Size	B	D	P	PP	R1	R2	S	Female Thread Size
19	**2.30** 0.091	**27.50** 1.043	**3.25** 0.128	**4.93** 0.194	**29.36** 1.156	**26.97** 1.062	**36.50** 1.437	**M8**
21	**3.00** 0.118	**31.10** 1.224	**3.25** 0.128	**4.93** 0.194	**31.75** 1.250	**29.36** 1.156	**39.70** 1.563	**M10**
23	**3.00** 0.118	**34.40** 1.354	**3.91** 0.154	**6.15** 0.242	**34.93** 1.375	**31.75** 1.250	**42.90** 1.689	**M10**
25	**3.00** 0.118	**36.60** 1.441	**3.01** 0.119	**6.15** 0.242	**38.10** 1.500	**34.93** 1.375	**46.00** 1.811	**M12**

Millimeters Inches

POLAMCO High-Power Connectors

Bulkhead Feedthrough Jam Nut Receptacle

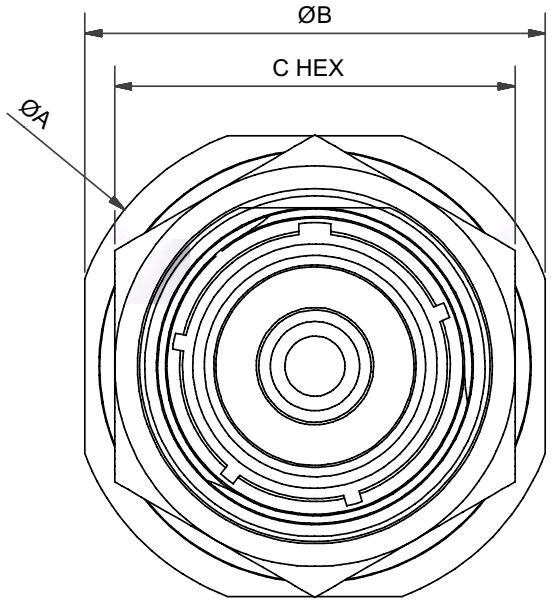

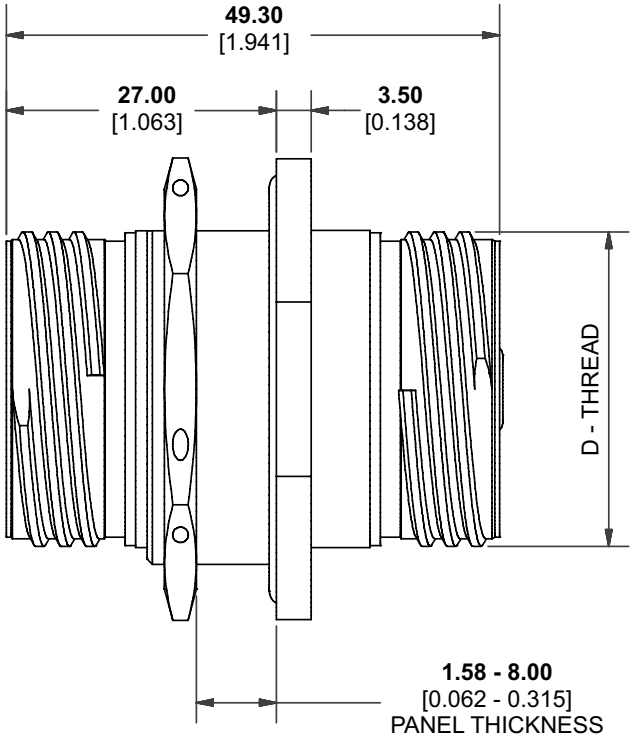

Shell Size	A	B	C	E	F
19	**49.20** 1.937	**46.00** 1.811	**40.00** 1.575	**35.18** 1.385	**33.91** 1.335
21	**52.40** 2.063	**49.20** 1.937	**43.00** 1.693	**38.35** 1.510	**37.08** 1.460
23	**55.60** 2.189	**52.40** 2.063	**46.00** 1.811	**41.53** 1.635	**40.26** 1.585
25	**58.70** 2.311	**55.60** 2.189	**50.00** 1.969	**44.70** 1.760	**43.43** 1.710

Millimeters Inches

POLAMCO High-Power Connectors

Bulkhead Feedthrough Square Flange Receptacle

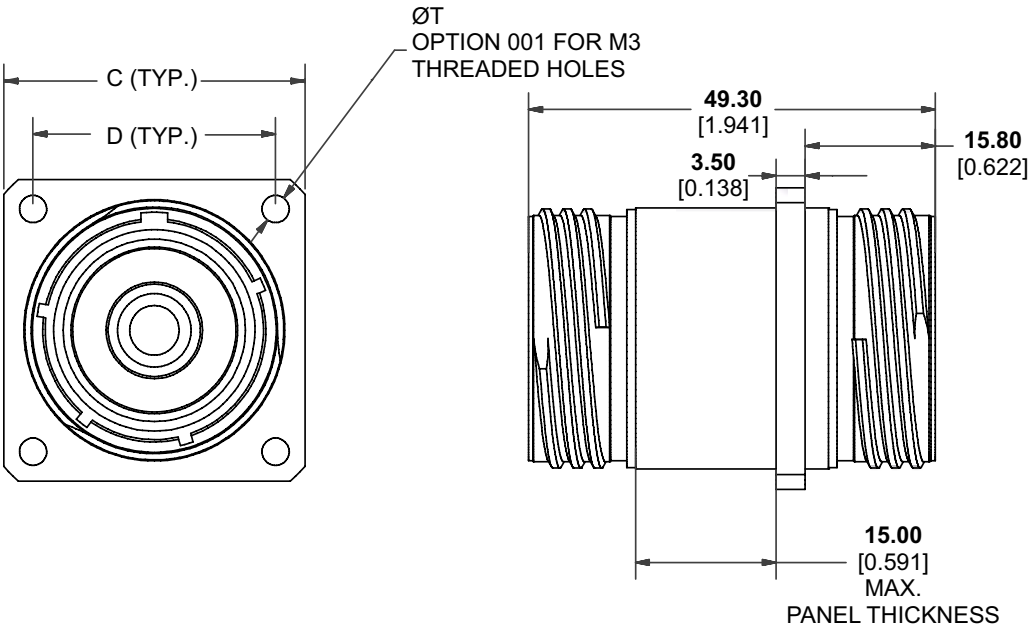

Shell Size	C	D	H	T
19	**36.50** 1.437	**29.40** 1.157	**32.94** 1.297	**3.30** 0.130
21	**39.70** 1.563	**31.80** 1.252	**36.29** 1.429	
23	**42.90** 1.689	**34.90** 1.374	**39.29** 1.547	
25	**46.00** 1.811	**38.10** 1.500	**42.47** 1.672	

Millimeters Inches

POLAMCO High-Power Connectors

Power Crimp Contacts

MATERIALS

- **Contact:** Silver-plated copper
- **Insulator:** PPS-GL40, UL94V-0

PERFORMANCE

- **Voltage Rating:** 1000 VAC / 1410 VDC
- **Current Rating:**
  Shell Size 25: 1000A
  Shell Size 23: 800A
  Shell Size 21: 600A
  Shell Size 19: 400A

Dimensions

Crimp Size (CSA, mm²)	øA Max.	
	Standard Cable	Fine Stranded Cable
50	**10.00** 0.394	**10.30** 0.406
70	**11.30** 0.445	**12.10** 0.476
95	**13.50** 0.531	**14.20** 0.559
120	**15.20** 0.598	**16.50** 0.650
150	**16.70** 0.657	**17.60** 0.693
185	**19.20** 0.756	**19.20** 0.756
240	**21.10** 0.831	**N/A**

Millimeters Inches

Maximum Contact Size by Shell Size

Shell Size	Max. Crimp (CSA, mm²)	
	Standard Cable	Fine Stranded Cable
19	70	70
21	120	95
23	185	150
25	240	185

Socket Contact

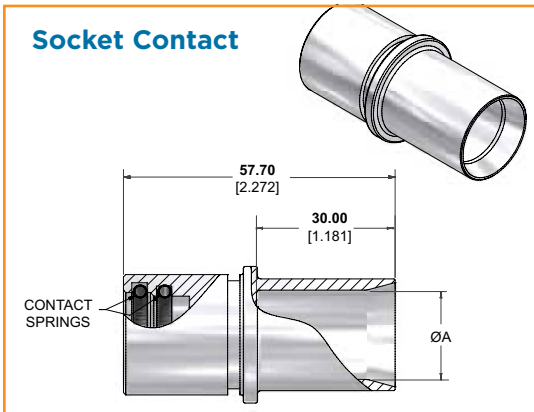

Pin Contact

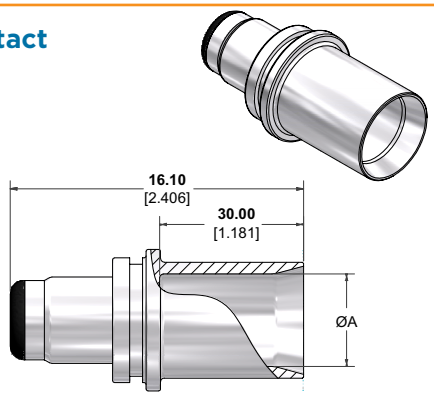

PC04HP 25 185 FS P 5 V

SERIES

SHELL SIZE

CRIMP SIZE (CSA)

CABLE TYPE
- **S** Standard
- **FS** Fine Strand

CONTACT TYPE
- **S** Socket
- **P** Pin
- **H3** 90°

MATERIAL
Copper

FINISH
Silver Plate

SAVES SPACE AND WEIGHT

- Standard aluminum alloy or lightweight composite shells
- Low profile backshells
- Long and short shell styles

RELIABLE PERFORMANCE

- Corrosion resistant
- Thread-on, pull-off interface
- Accommodates various shield braid termination methods

CONVENIENT

- Fewer parts help provide a simple, more reliable assembly
- Common interfacing capability for the operation and employment of stores
- Mating connector is standard MIL-DTL-38999 Series III receptacle

QUALIFIED

- MIL-DTL-38999/31 plug connectors (type 3, 4, and 5)
- ACT98 and commercial /29 composite versions also available
- Qualified to Eurofighter JN1034 also available

DEUTSCH Lanyard-Release Connectors

38999 Series III Plug Connectors for MIL-STD-1760 Aircraft/Store Electrical Interconnection Systems

DEUTSCH lanyard-release plugs are high-reliability electrical interconnections featuring common interfacing capability for the operation and employment of stores on aircraft.

Advanced aluminum and composite technology applied to mission-critical MIL-STD-1760 (AEIS) systems helps ensure higher performance in terms of corrosion resistance, weight savings, and durability.

Our lanyard-release connectors provide reliable interfaces for controlling and monitoring aircraft stores and other aircraft subsystems. With a variety of high-performance accessories, we help reduce assembly time, increase cost savings, and accommodate the severe environment of the MIL-STD-1760 system.

MATERIALS

- **Shell:** Composite or aluminum alloy
- **Finish:** Olive drab cadmium or electroless nickel
- **Lanyard Ring:** Black anodized aluminum alloy
- **Lanyard Cover:** PTFE, natural
- **Lanyard:** Aramid yarn, natural
- **Snap Rings and Wafer Spring:** Passivated stainless steel
- **Resilient Insert:** Silicone elastomer
- **Plastic Inserts:** Thermoplastic

ENVIRONMENTAL/MECHANICAL

- **Temperature:** -55°C to +175°C
- **Durability:** 500 mating cycles
- **Vibration:** As per MIL-DTL-38999
- **Thermal Shock:** As per MIL-DTL-38999

Contact TE for the latest information and design specifications.

SPACE AND WEIGHT SAVINGS

- Almost double the contact density of MIL-DTL-38999 connectors
- Lightweight materials

RUGGED

- Threaded anti-vibration coupling
- Scoop-proof interface
- Aggressive fluid resistance and dust ingress prevention

RELIABLE

- Fully sealed cable and mating interface
- EMI screening as per MIL-DTL-38999 Series III
- RFI mating interface band

VERSATILE

- Multiple keying options
- Various plating and material options
- Backshell or cable braid/boot rear feature that help eliminate need for backshell
- Rear-removable crimp and PCB contacts (consult TE for PCB details)

DEUTSCH Wildcat 38999-Style Connectors

Higher Contact Densities in a Familiar MIL-DTL-38999 Form Factor

Combine high reliability and high contact density in a familiar MIL-DTL-38999 format with Wildcat 38999 connectors. With higher contact density than mil-spec high-density inserts and nearly double the contact density of standard inserts, Wildcat 38999 connectors offer extreme temperature, vibration, and corrosion resistance, and durability of 500 mating cycles in a space-saving design.

The easy-grip coupling ring and triple-start thread make mating and unmating fast and simple.

A variety of material and plating options means versatile choices to match the demands of your application.

ELECTRICAL

- **Dielectric Withstand Voltage:** 1000 VAC
- **Current Rating:** 3 amps/contact

ENVIRONMENTAL

- **Temperature:**
  -65°C to +175°C (cadmium)
  -65°C to +200°C (nickel)
- **Durability:** 500 mating cycles min.
- **Vibration:** MIL-DTL-38999 Series III
- **Thermal Shock:** MIL-DTL-38999 Series III
- **Shock:** 300 g, 3 ms in 3 axes
- **Fluid resistance:** Withstands a wide range of military and aerospace fluids
- **Salt spray resistance:**
  500 hours (cadmium finish) per MIL-STD-1344 Method 100 B and NFC93422.
  48 hours (nickel finish)
- **Sealing:** Up to 30,000 m/100,000 ft. altitude

MATERIALS

- **Shell and Coupling Ring:** Aerospace grade aluminum alloy as standard
- **Plating:** Olive drab cadmium, RoHS electroless nickel, black zinc nickel (other finishes available on request)
- **Seals:** Fluorinated silicone
- **Insulators:** High-performance thermoplastic
- **Contacts:** Gold-plated machined copper alloy
- **Wire Size:** 28 to 24 AWG

Wildcat 38999-Style Connectors

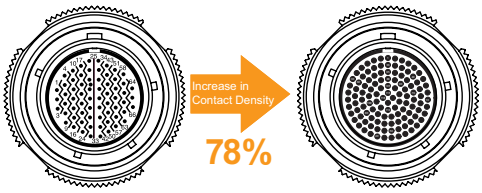

MIL-DTL-38999
Insert 19-35
66 Contacts, Size 22

Wildcat 38999
Insert 19-118
118 Contacts, Size 24

MIL-DTL-38999				DEUTSCH Wildcat 38999	
Standard Density Size 22D Contacts		High Density Size 23 Contacts		High Density Size 24 Contacts	
Insert	**No. of Contacts**	**Insert**	**No. of Contacts**	**Insert**	**No. of Contacts**
9-35	6	9-23	9	09-11	11
11-35	13	11-23	19	11-23	23
13-35	22	13-23	32	13-41	41
15-35	37	15-23	55	15-64	64
19-35	66	19-23	88	19-118	118

Square Flange Receptacle: Shell Type 0

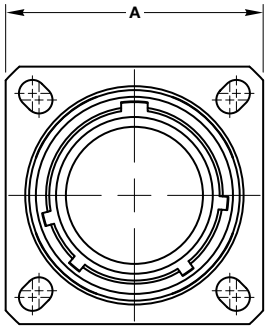

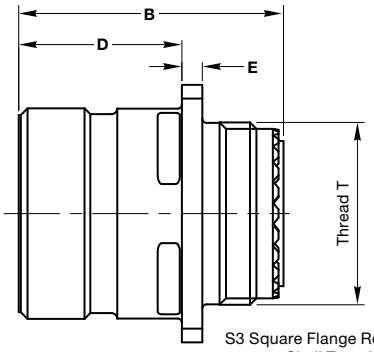

S3 Square Flange Receptacle
Shell Type 20

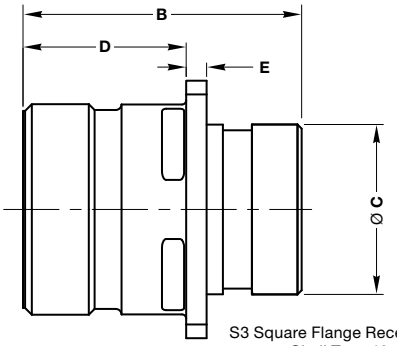

S3 Square Flange Receptacle
Shell Type 10

Square Flange Receptacle with Accessory Thread

Shell Size	A Max.	B Max.	D Max.	E Max.	Thread 'T'
09	**24.00** .945	**31.55** 1.242	**19.90** .783	**2.50** .098	M12 x 1.0–6g
11	**26.40** 1.039				M15 x 1.0–6g
13	**28.90** 1.138				M18 x 1.0–6g
15	**31.30** 1.232				M22 x 1.0–6g

Millimeters Inches

Consult TE for further information on 19-118 connectors

Square Flange Receptacle with Knurled Rear

Shell Size	A Max.	B Max.	C Max.	D Max.	E Max.
09	**24.00** .945	**33.80** 1.331	**11.30** .445	**19.90** .783	**2.50** .098
11	**26.40** 1.039		**14.35** .565		
13	**28.90** 1.138		**17.50** .689		
15	**31.30** 1.232		**20.65** .813		

Millimeters Inches

Consult TE for further information on 19-118 connectors

Wildcat 38999-Style Connectors

Square Flange Receptacle Panel Cutouts

Shell Size	ØX		Y	
	Front Mount	Rear Mount	Max.	Min.
09	**13.11** .516	**16.66** .656	**18.26** .719	**15.09** .594
11	**15.08** .594	**22.22** .875	**20.26** .798	**18.26** .719
13	**19.05** .750	**23.42** .922	**23.01** .906	**20.62** .812
15	**23.01** .906	**26.59** 1.047	**24.61** .969	**23.01** .906

Millimeters Inches

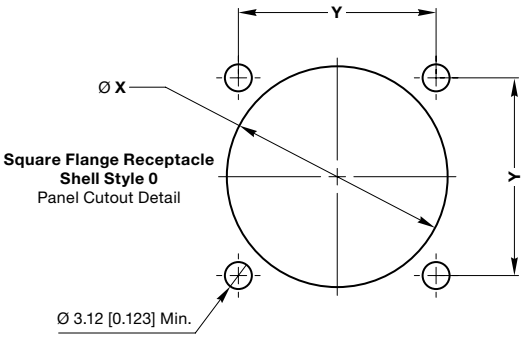

Jam Nut Receptacle: Shell Type 4

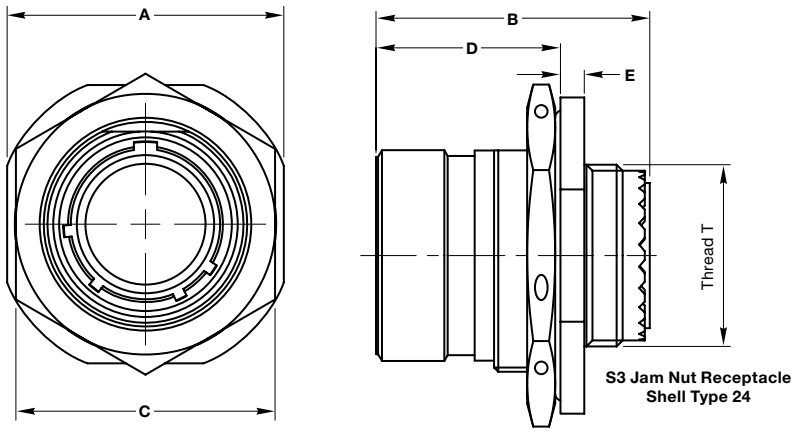

Shell Size	A Max.	B Max.	C Max.	D Max.	E Max.	Thread 'T'
09	**27.20** 1.071	**32.55** 1.281	**23.25** .915	**22.40** .882	**2.95** .116	M12x1.0-6g
11	**32.00** 1.260		**26.30** 1.035			M15x1.0-6g
13	**35.10** 1.382		**32.00** 1.260			M18x1.0-6g
15	**38.30** 1.508		**36.00** 1.417			M22x1.0-6g

Millimeters Inches

Consult TE for further information on 19-118 connectors

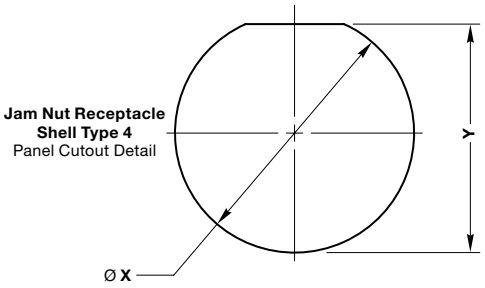

Panel Thickness = 3.00 [0.118] Max.

Wildcat 38999-Style Connectors

Jam Nut Receptacle Panel Cutouts

Shell Size	ØX (±.01)	Y (±.01)
09	**17.80** .700	**16.89** 0.665
11	**20.98** .826	**19.43** .765
13	**25.68** 1.011	**24.16** .951
15	**28.90** 1.138	**27.43** 1.080

Millimeters Inches

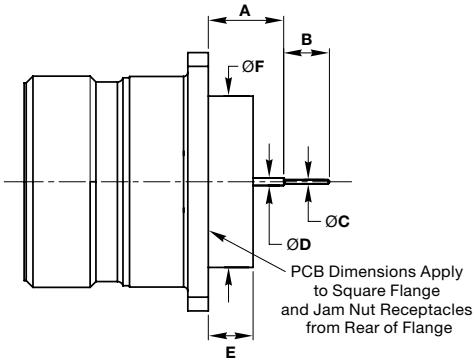

PCB Tail Dimensions

Layout	Part No. Option Code	Shell Accessory	Part No.		A		B Max.	ØC Max.	ØD Max.	E Max.	ØF Max.	
			Pins	Sockets	Max.	Min.					Shell Size	SØ Max.
09–11 11–23 13–41 15–64 19–118	-151	W320	611624-31	611625	**11.73** .462	**10.73** .422	**5.55** .219	**.60** .024	**1.00** .039	**5.74** .226	09	**11.07** .436
	-151	W324	611556-31	611627	**9.73** .383	**8.73** .344	**5.55** .219	**.60** .024	**1.00** .039	**5.74** .226	11	**14.33** .564
	-151	W330	Potted	Potted	**9.73** .383	**8.73** .344	**5.55** .219	**.60** .024	**1.00** .039	**5.74** .226	13	**17.42** .686
	-151	W334	Potted	Potted	**6.73** .265	**5.73** .226	**5.55** .219	**.60** .024	**1.00** .039	**5.74** .226	15	**20.57** .810

Millimeters Inches

Free Plug: Shell Type 6

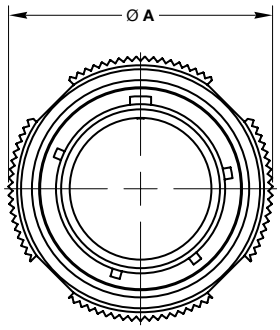

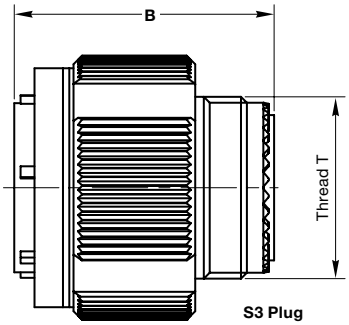

S3 Plug Shell Style 26

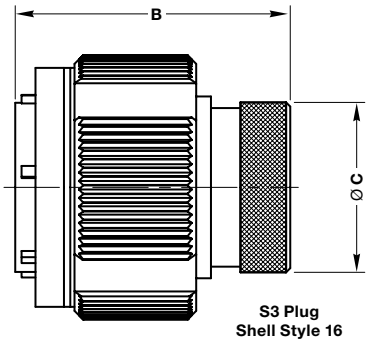

S3 Plug Shell Style 16

Plug with Accessory Thread

Shell Size	øA Max.	B Max.	Thread 'T'
09	**21.30** .839	**31.10** 1.224	M12x1.0–6g
11	**23.75** .935		M15x1.0–6g
13	**29.10** 1.146		M18x1.0–6g
15	**32.30** 1.272		M22x1.0–6g

Millimeters Inches

Consult TE for further information on 19-118 connectors

Plug with Knurled Rear

Shell Size	øA Max.	B Max.	øC Max.
09	**21.30** .839	**33.30** 1.311	**11.30** .445
11	**23.75** .935		**14.35** .565
13	**29.10** 1.146		**17.50** .689
15	**32.30** 1.272		**27.00** 1.063

Millimeters Inches

Consult TE for further information on 19-118 connectors

Wildcat 38999-Style Connectors

CONTACTS

Contact		Current Rating	Wire Size (AWG)	Conductor		Wire Sealing Range	
Pin	Socket			Min. Ø	Max. Ø	Min. Ø	Max. Ø
605719-31	605721	3 A	24–28	**.254** .010	**.511** .020	**.600** .024	**.96** .038

Millimeters Inches

Filler Plug: Part No. 800300-24

TOOLING

Ins/Ext Tool	Crimp Tool	Positioner	
		Pin	Socket
605837	M22520/ 2-01	610286	610287

Contact Arrangement

(Viewed from the mating face of a connector with male (pin) contacts)

Shell Size 09

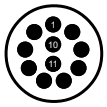

09–11

Shell Size 11

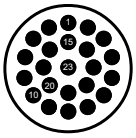

11–23

Shell Size 13

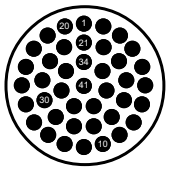

13–41

Shell Size 15

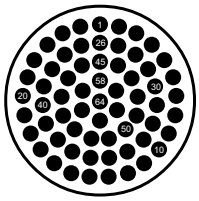

15–64

Shell Size 19

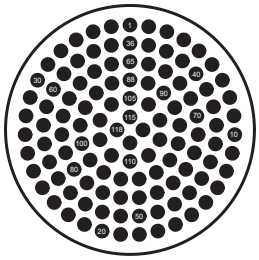

19–118

ACCESSORIES

Protective Caps and Backshells

Wildcat 38999 connectors are compatible with MIL-DTL-38999 Series III style backshells and procaps or equivalent.

Raychem Heat-Shrink Boots

Shell Size	Straight Boot	90° Boot
09	202K121	222K121
11	202K132	222K121
13	202K142	222K132
15	202K142	222K142
19	202K153	222K152

CRES-Lock Bandstraps

Easy to Use

- Quick, easy, cost-effective and reliable termination of braided shielding

High Performance

- Low profile, one-piece design helps eliminate EMI leakage paths

Rugged

- Shock, vibration and environmental performance to help meet aerospace and defense requirements

Wildcat 38999-Style Connectors

ORDERING INFORMATION

PART NUMBERING SYSTEM W3 1 6 T W 09–11 S N - ****

SERIES
Wildcat 38999

SHELL REAR ACCESSORY
- **1** Braid and Boot Mounting Feature
- **2** Rear Accessory Thread, Anti-rotation Teeth
- **3** No Accessory (e.g., Box Mount)

SHELL TYPE
- **0** Square Flange Receptacle
- **4** Jam Nut Receptacle
- **6** Free Plug
- **7** Reduced Jam Nut Flange Receptacle

COUPLING TYPE
- **T** Triple-start ACME Thread
- **B** Bayonet (Consult TE on Availability)

CLASS CODE
- **W** Aluminum with Olive Drab Cadmium
- **F** Aluminum with Electroless Nickel
- **Z** Aluminum with Black Zinc Nickel
- **K** Stainless Steel

SHELL SIZE—INSERT ARRANGEMENT
- **09–11** Shell Size 9, 11 Way
- **11–23** Shell Size 11, 23 Way
- **13–41** Shell Size 13, 41 Way
- **15–64** Shell Size 15, 64 Way
- **19–118** Shell Size 19, 118 Way (Consult TE on Availability)

CONTACT TYPE
- **P** Pin (Male)
- **S** Socket (Female)

KEYING
- **N** Normal
- **U** Universal
- **A, B, C, D, E**

OPTION CODE *(3 DIGITS)* OR MODIFICATION CODE
- **090** Supplied without Contacts
- **51** PCB Contacts

VERSATILE

- Medium and high-density arrangements
- 12 shell sizes and up to 128 contacts
- 100% scoop proof design

RELIABLE

- Elastomer interface and wire seals
- RFI fingers at mating interface and 360º backshell
- Hard face socket insert
- Contact retention mechanism integral to insert

CONVENIENT

- Simple assembly techniques with standard tooling
- Standard MIL-C-39029 contacts
- Positive bayonet locking serrations

38999-Style HDJ Series Connectors

DEUTSCH HDJ/JN1003 Medium and High Density Connectors

The HDJ Series connectors are bayonet coupling connectors specifically designed for Eurofighter use. The range comprises plugs, receptacles, and cable accessories.

The series is intermateable and intermountable with connectors conforming to LN29729, EN3372, VG 96912 and the DEUTSCH AS range. The connectors are qualified in accordance with J 62.017.

The connectors are based on MIL-DTL-38999 Series I coupling interface lengths and Series II diameters.

Specifications

MATERIALS

- **Shell:** Aluminum alloy, plated olive drab cadmium
- **RFI Ring:** Beryllium copper, plated nickel/cadmium
- **Inserts:** Thermoplastic and fluorinated silicone elastomer
- **Contacts:** Copper alloy, plated gold

MECHANICAL

- **Vibration:** Per J62.017 para. 2.11
- **Durability:** 500 mating cycles

ENVIRONMENTAL

- **Service Temperature:** -55° C to +175° C
- **Thermal Shock:** As per J62.017 para. 2.4
- **Sealing:** Up to 30,000 m (100,000 ft.) altitude
- **Salt Spray Resistance:** per MIL-DTL-38999

38999-Style HDJ Series Connectors

ELECTRICAL

- **Insulation Resistance:** ≥100,000 MΩ @ 20°C
- **Contact Current Rating:**
  Size 22: 5 A
  Size 20: 7.5 A
  Size 16: 13 A
  Size 12: 23 A
  Size 8

Dielectric Withstand Voltage

Rating Class	Dielectric Withstand Voltage (VAC_{rms})	
	Sea Level	22,000 m (70,000 ft.)
M	1300	800
N	1000	600
I	1800	1000
II	2300	1000

Part Numbering
DEUTSCH Series

HDJ 07 14 - 35 P N - *

CONNECTOR SERIES

SHELL STYLE
00 Square Flange Receptacle
01H Hermetic
02 Box Mount
03 Bulkhead Receptacle
06 Free Plug with Grounding Fingers
07 Jam Nut Receptacle

SHELL SIZE

INSERT ARRANGEMENT

MODIFICATION
Without Suffix With Contacts
090 Without Contacts

ORIENTATION
N, A, B, C, D
(N and A only for Style 03)
(N, A and D only for Size 8)

CONTACT TYPE
P Pin
S Socket
(for Style 03 use 'PS' designator)

Part Numbering
Eurofighter Series

JN 1003 A 14 - 35 P N - *

CONNECTOR SERIES

SHELL STYLE
A Jam Nut
B Square Flange Receptacle
FG Free Plug with Grounding Fingers
H Box Mount

SHELL SIZE

INSERT ARRANGEMENT

MODIFICATION
Without Suffix Without Contacts
1 With Contacts

ORIENTATION
N, A, B, C, D
(N and A only for Style 03)
(N, A and D only for Size 8)

CONTACT TYPE
P Pin
S Socket

38999-Style HDJ Series Connectors

Square Flange Receptacle – Shell Style OO (JN 1003 Style B)

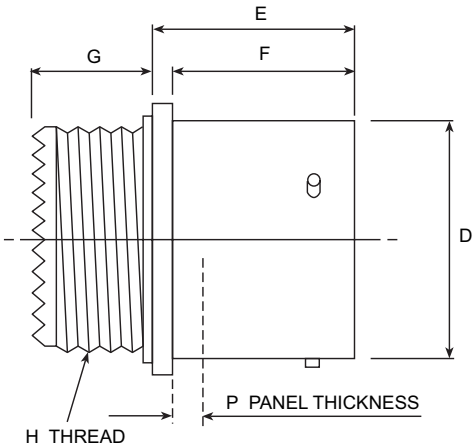

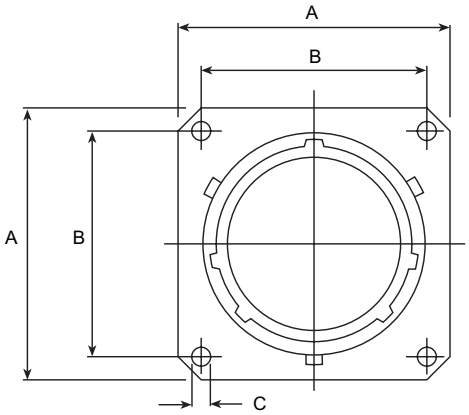

Shell Size	A ±0.40 (±0.016)	B ±0.13 (±0.005)	C ±0.10 (±0.004)	D +0/-0.13 (+0/-0.005)	E +0.15 (+0.016) Max.	F +0/-0.13 (+0/-0.005)	G Max.	H Thread UNEF Class 2a	P Max.
08	**20.62** 0.812	**15.10** 0.594		**12.00** 0.472				0.4375 – 28	
10	**23.83** 0.938	**18.30** 0.720		**15.00** 0.591				0.5625 – 24	
12	**26.19** 1.031	**20.60** 0.811		**19.05** 0.750				0.6875 – 24	
14	**28.57** 1.125	**23.00** 0.906		**22.22** 0.875		**16.05** 0.632		0.8125 – 20	
16	**30.96** 1.219	**24.60** 0.969	**3.20** 0.126	**25.40** 1.000				0.9375 – 20	**3.00** 0.118
18	**33.32** 1.312	**27.00** 1.063		**28.57** 1.125	**18.21** 0.717		**14.00** 0.551	1.0625 – 18	
20	**36.53** 1.438	**29.40** 1.157		**31.75** 1.250				1.1875 – 18	
22	**39.67** 1.562	**31.80** 1.252		**34.92** 1.375		**15.29** 0.602		1.3125 – 18	
24	**42.90** 1.689	**34.90** 1.374	**3.70** 0.146	**38.10** 1.500				1.4375 – 18	**2.26** 0.089

Millimeters Inches

Shell Size	08	10	12	14	16	18	20	22	24
W ± 0.2	**13.7** 0.539	**16.9** 0.665	**21.0** 0.827	**24.2** 0.953	**27.3** 1.075	**30.5** 1.201	**33.7** 1.327	**36.9** 1.453	**40.0** 1.575
Z ± 0.2	**15.1** 0.594	**18.3** 0.720	**20.6** 0.811	**23.0** 0.906	**24.6** 0.969	**27.0** 1.063	**29.4** 1.157	**31.8** 1.252	**34.9** 1.374
Y	**28.0** 1.102	**31.0** 1.220	**36.0** 1.417	**41.0** 1.614	**43.0** 1.693	**46.0** 1.811	**53.0** 2.087	**58.0** 2.283	**61.0** 2.402

Millimeters Inches

Panel Cutout

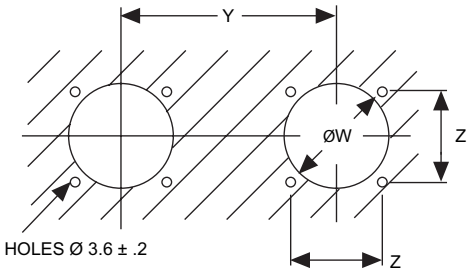

38999-Style HDJ Series Connectors

Jam Nut Receptacle - Shell Style 07 (JN 1003 Style A)

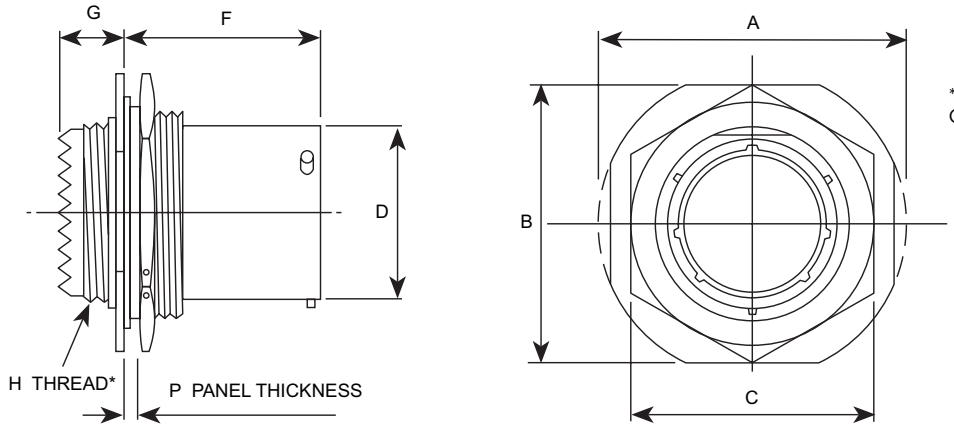

*H Thread VG 96912 Style - Consult TE for availability.

Shell Size	A Max.	B ±0.41 (±0.016)	C ±0.43/-0.41 (±0.017/-0.016)	D +0/-0.13 (+0/-0.005)	F +0.13 (+0.005)	G Max.	P	H Thread UNEF Class 2a
08	**27.38** 1.078	**23.83** 0.938	**19.05** 0.750	**12.00** 0.472				0.4375 – 28
10	**30.56** 1.203	**26.97** 1.062	**22.22** 0.875	**15.00** 0.591				0.5625 – 24
12	**35.33** 1.391	**31.75** 1.250	**26.97** 1.062	**19.05** 0.750				0.6875 – 24
14	**38.51** 1.516	**34.92** 1.375	**30.18** 1.188	**22.22** 0.875			**3.20** 0.126 Max	0.8125 – 20
16	**41.68** 1.641	**38.10** 1.500	**33.32** 1.312	**25.40** 1.000	**23.24** 0.915	**14.10** 0.555		0.9375 – 20
18	**44.86** 1.766	**41.27** 1.625	**36.53** 1.438	**28.57** 1.125			**1.60** 0.063 Max	1.0625 – 18
20	**49.61** 1.953	**46.02** 1.812	**39.67** 1.562	**31.75** 1.250				1.1875 – 18
22	**52.78** 2.078	**49.23** 1.938	**42.88** 1.688	**34.92** 1.375				1.3125 – 18
24	**55.96** 2.203	**52.37** 2.062	**46.02** 1.812	**38.10** 1.500				1.4375 – 18

Millimeters Inches

Shell Size	08	10	12	14	16	18	20	22	24
W ± 0.10	**14.53** 0.572	**17.7** 0.697	**22.5** 0.886	**25.7** 1.012	**28.83** 1.135	**32.01** 1.260	**35.18** 1.385	**38.36** 1.510	**41.53** 1.635
Z ± 0.2	**13.62** 0.536	**16.79** 0.661	**21.0** 0.827	**24.08** 0.948	**27.23** 1.072	**30.41** 1.197	**33.58** 1.322	**36.95** 1.455	**39.93** 1.572
Y	**28.0** 1.102	**31.0** 1.220	**36.0** 1.417	**41.0** 1.614	**43.0** 1.693	**46.0** 1.811	**53.0** 2.087	**58.0** 2.283	**61.0** 2.402

Millimeters Inches

Panel Cutout

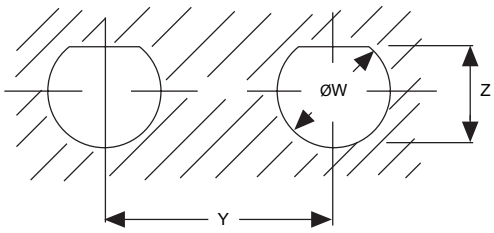

38999-Style HDJ Series Connectors

Box Mount-Shell Style 02 (JN 1003 Style H)

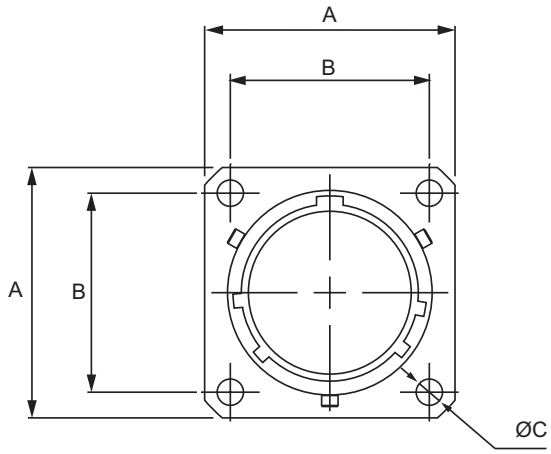

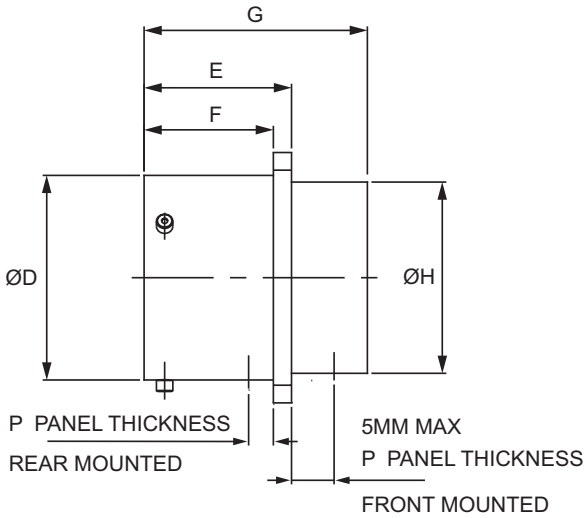

Shell Size	A ±0.40 (±0.016)	B ±0.13 (±0.005)	ØC Min.	ØD +0.00/-0.13 (+0.00/-0.005)	E +0.15 (+0.016) Max.	F +0.00/-0.13 (+0.00/-0.005)	G Max.	ØH Max.	P Max.
08	**20.62** 0.812	**15.10** 0.594		**12.00** 0.472				**11.91** 0.469	
10	**23.83** 0.938	**18.30** 0.720		**15.00** 0.591				**15.09** 0.594	
12	**26.19** 1.031	**20.60** 0.811		**19.05** 0.750				**18.26** 0.719	
14	**28.57** 1.125	**23.00** 0.906		**22.22** 0.875		**16.05** 0.632		**21.44** 0.844	
16	**30.96** 1.219	**24.60** 0.969	**3.20** 0.126	**25.40** 1.000	**18.21** 0.717		**27.65** 1.089	**24.61** 0.969	**3.00** 0.118
18	**33.32** 1.312	**27.00** 1.063		**28.57** 1.125				**27.38** 1.078	
20	**36.53** 1.438	**29.40** 1.157		**31.75** 1.250				**30.56** 1.203	
22	**39.67** 1.562	**31.80** 1.252		**34.92** 1.375		**15.29** 0.602		**33.73** 1.328	
24	**42.90** 1.689	**34.90** 1.374	**3.70** 0.146	**38.10** 1.500			**28.72** 1.131	**36.91** 1.453	**2.26** 0.089

Millimeters Inches

38999-Style HDJ Series Connectors

Solder Mount-Shell Style 01H (JN 1003 Style E Type)*

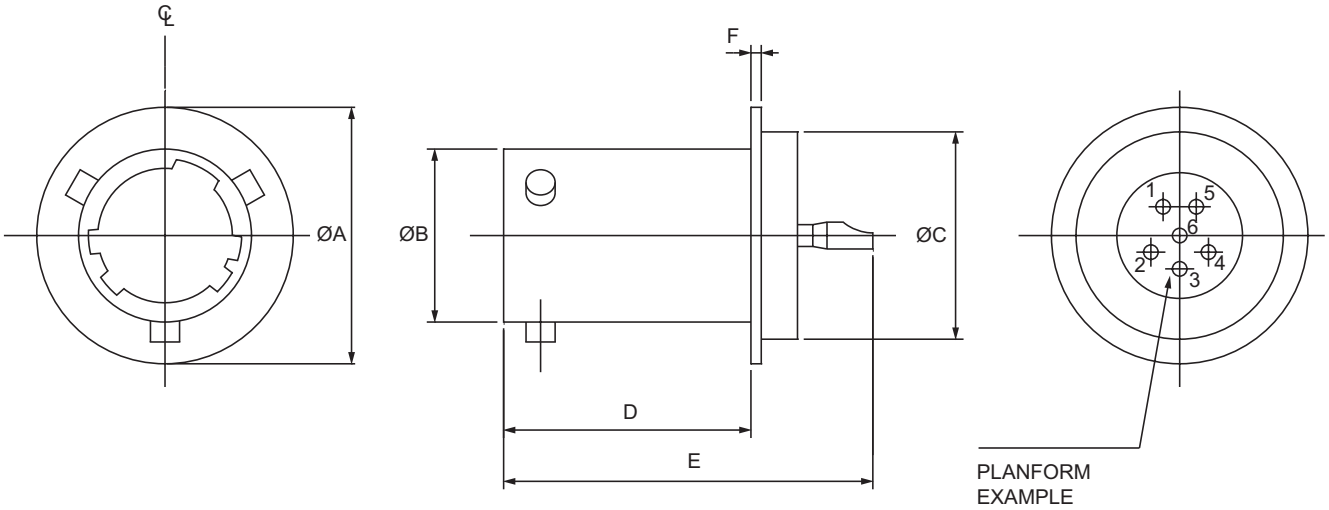

Shell Size	ØA ±0.05 (±0.002)	B +0.00/-0.16 (+0.00/-0.006)	C ±0.05 (±0.002)	D Max.	E ±1.16 (±0.046)	F Max.
08	**17.45** 0.687	**12.00** 0.472	**14.20** 0.559			
10	**20.24** 0.797	**15.00** 0.591	**16.99** 0.669			
12	**23.01** 0.906	**19.05** 0.750	**19.76** 0.778			
14	**26.19** 1.031	**22.22** 0.875	**22.94** 0.903	**17.18** 0.676	**26.29** 1.035	
16	**29.36** 1.156	**25.40** 1.000	**26.11** 1.028			**0.76** 0.030
18	**32.54** 1.281	**28.57** 1.125	**29.29** 1.153			
20	**34.92** 1.375	**31.75** 1.250	**31.67** 1.247			
22	**38.10** 1.500	**34.92** 1.375	**34.85** 1.372	**17.19** 0.677	**26.30** 1.035	
24	**41.27** 1.625	**38.10** 1.500	**38.02** 1.497			

Millimeters Inches
*Shell Styles '01H' and '03' are not qualified to JN1003

38999-Style HDJ Series Connectors

Through Bulkhead Receptacle Shell Style 03 (JN 1003 Style J Type)*

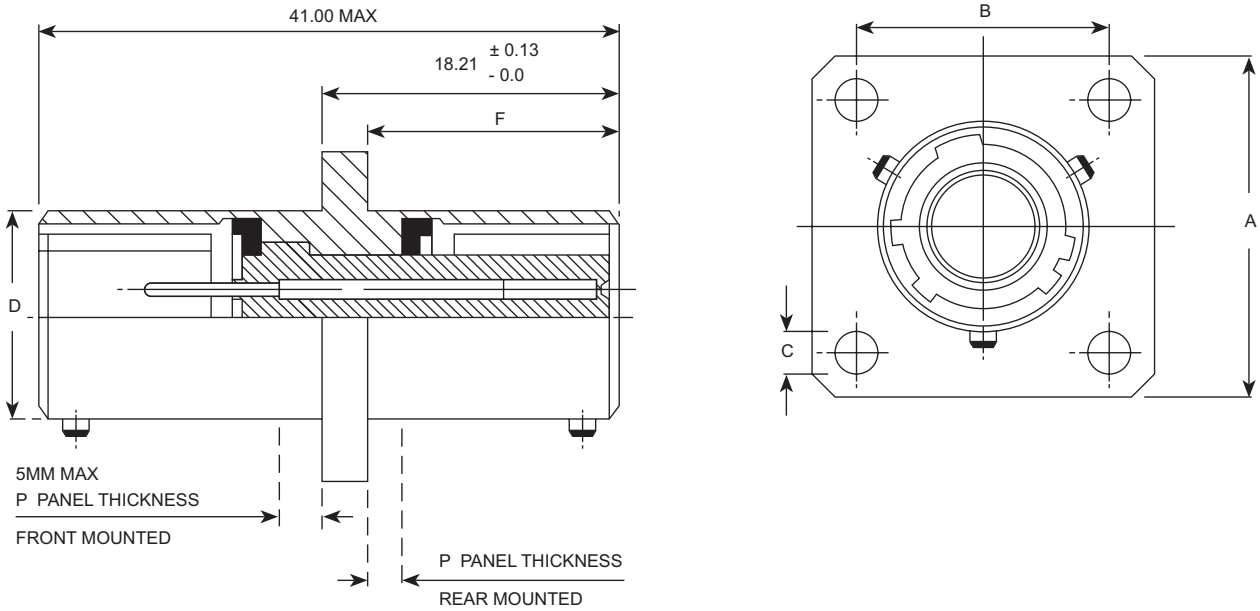

Shell Size	A +0.40 (±0.016)	B ±0.13 (±0.005)	C ±0.10 (±0.004)	D +0/-0.13 (+0/-0.005)	F +0/-0.13 (+0/-0.005)	P Max.
08	**20.62** 0.812	**15.10** 0.594		**12.00** 0.472		
10	**23.83** 0.938	**18.30** 0.720		**15.00** 0.591		
12	**26.19** 1.031	**20.60** 0.811		**19.05** 0.750	**16.05** 0.632	
14	**28.57** 1.125	**23.00** 0.906	**3.20** 0.126	**22.22** 0.875		**3.00** 0.118
16	**30.96** 1.219	**24.60** 0.969		**25.40** 1.000		
18	**33.32** 1.312	**27.00** 1.063		**28.57** 1.125		
20	**36.53** 1.438	**29.40** 1.157		**31.75** 1.250		
22	**39.67** 1.562	**31.80** 1.252		**34.92** 1.375	**15.29** 0.602	
24	**42.90** 1.689	**34.90** 1.374	**3.70** 0.146	**38.10** 1.500		**2.26** 0.089

Millimeters Inches

38999-Style HDJ Series Connectors

Plugs
Plug with Grounding Fingers - Shell Style 06 (JN 1003 Style FG)

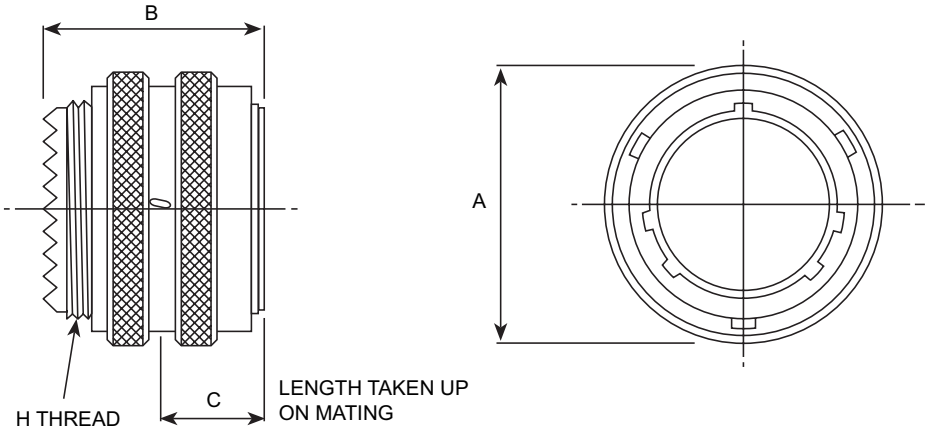

Shell Size	A Max.	B Max.	C Max.	H Thread UNEF Class 2a
08	**18.64** 0.734			0.4375 – 28
10	**21.44** 0.844			0.5625 – 24
12	**25.81** 1.016			0.6875 – 24
14	**28.98** 1.141	**30.00** 1.181		0.8125 – 20
16	**32.13** 1.265		**15.00** 0.591	0.9375 – 20
18	**35.33** 1.391			1.0625 – 18
20	**38.10** 1.500			1.1875 – 18
22	**41.27** 1.625			1.3125 – 18
24	**44.45** 1.750	**31.50** 1.240		1.4375 – 18

Millimeters Inches

38999-Style HDJ Series Connectors

Accessories
Protective Cap, Receptacle (JN 1003 Styles MA/MB)*

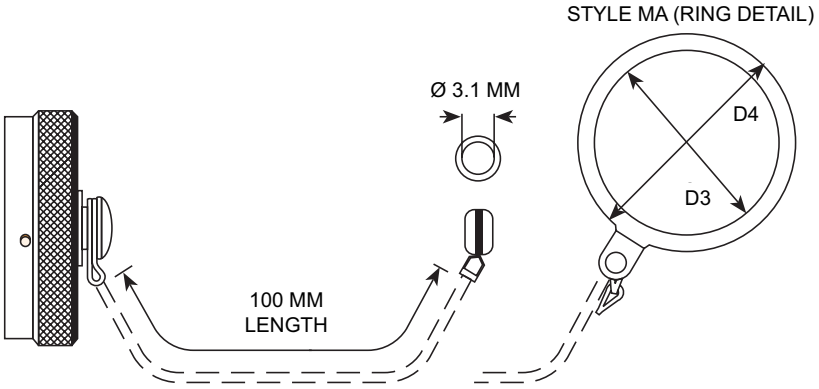

TE DEUTSCH Part No.	Eurofighter Ref.	Shell Size
HDJ12 – **	JN1003MB**	**
HDJ13 – **	JN1003MA**	**

Shell Size	D3	D4
08	**14.6** 0.575	**21.95** 0.864
10	**17.8** 0.701	**26.77** 1.054
12	**22.5** 0.886	**31.55** 1.242
14	**25.7** 1.012	**36.83** 1.450
16	**28.9** 1.138	**40.31** 1.587
18	**32.1** 1.264	**43.18** 1.700
20	**35.2** 1.386	**46.36** 1.825
22	**38.0** 1.496	**49.19** 1.937
24	**41.6** 1.638	**52.71** 2.075

Millimeters Inches
*Protective caps are not qualified to JN1003

38999-Style HDJ Series Connectors

Accessories
Protective Cap, Plug (JN 1003 Style MF)

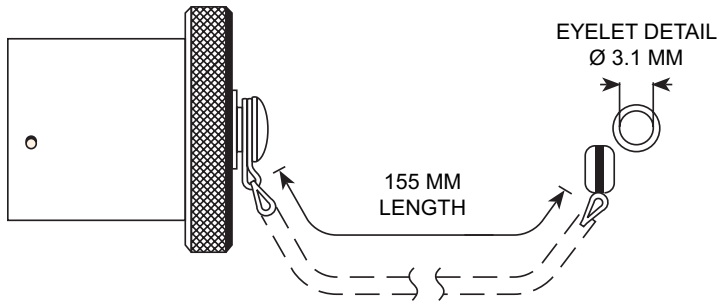

TE DEUTSCH Part No.	Eurofighter Ref.	Shell Size
HDJ11 – **	JN1003MF**	**

38999-Style HDJ Series Connectors

Accessories
Dummy Stowage (JN 1003 Style R)

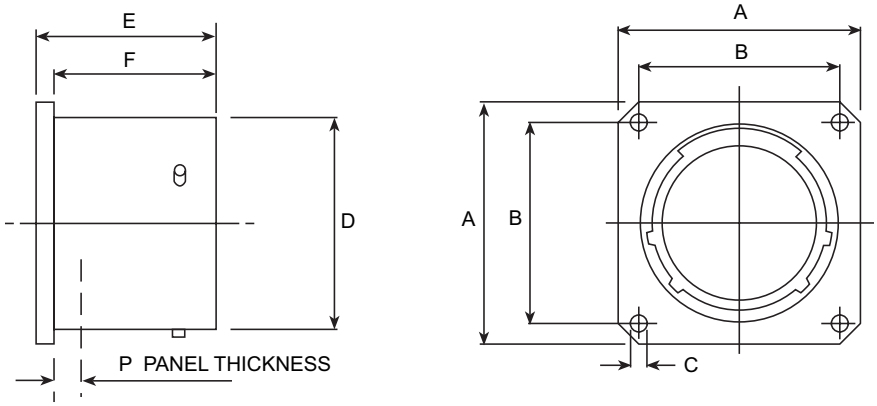

TE DEUTSCH Part No.	Eurofighter Ref.	Shell Size
HDJ10 – **	JN1003R**	**

Shell Size	A +0.40 (+0.016)	B ±0.13 (±0.005)	C ±0.10 (±0.004)	D +0/-0.13 (+0/-0.005)	E +0.15 (+0.006)	F +0/-0.13 (+0/-0.005)	P Max.
08	**20.62** 0.812	**15.10** 0.594		**12.00** 0.472			
10	**23.83** 0.938	**18.30** 0.720		**15.00** 0.591			
12	**26.19** 1.031	**20.60** 0.811		**19.05** 0.750		**16.05** 0.632	
14	**28.57** 1.125	**23.00** 0.906	**3.20** 0.126	**22.22** 0.875			**3.00** 0.118
16	**30.96** 1.219	**24.60** 0.969		**25.40** 1.000	**18.21** 0.717		
18	**33.32** 1.312	**27.00** 1.063		**28.57** 1.125			
20	**36.53** 1.438	**29.40** 1.157		**31.75** 1.250			
22	**39.67** 1.562	**31.80** 1.252		**34.92** 1.375		**15.292** 0.602	
24	**42.90** 1.689	**34.90** 1.374	**3.70** 0.146	**38.10** 1.500			**2.266** 0.089

Millimeters Inches

Insert Arrangements

SIZE 8

08-35
6#22D (M)

08-98
3#20 (I)

SIZE 10

10-35
13#22D (M)

10-98
6#20 (I)

SIZE 12

12-04
4#16 (I)

12-35
22#22D (M)

12-98
10#20 (I)

SIZE 14

14-19
19#20 (I)

14-35
37#22D (M)

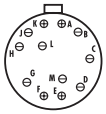

14-97
8#20 4#16 (I)

SIZE 16

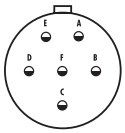

16-06
6#12 (I)

SIZE 16

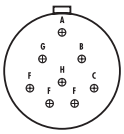

16-08
8#16 (II)

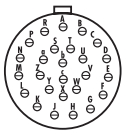

16-26
26#20 (I)

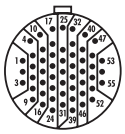

16-35
55#22D (M)

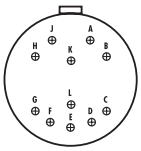

18-11
11#16 (II)

SIZE 18

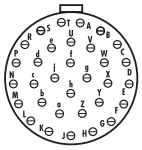

18-32
32#20 (I)

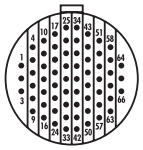

18-35
66#22D (M)

SIZE 20

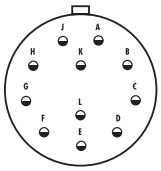

20-11
11#12 (I)

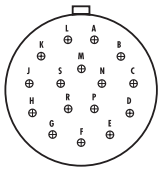

20-16
16#16 (II)

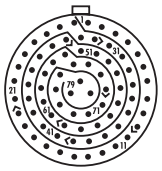

20-35
79#22D (M)

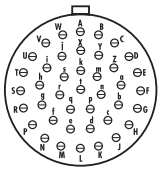

20-41
41#20 (I)

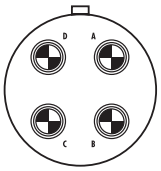

20-75
4 TWINAX #8 (M)

SIZE 22

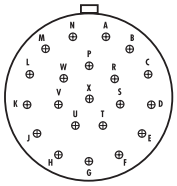

22-21
21#16 (II)

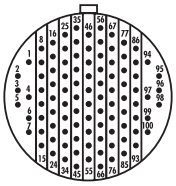

22-35
100#22D (M)

SIZE 22

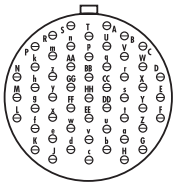

22-53
53#20 (I)

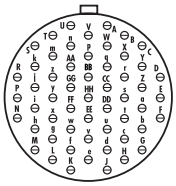

22-55
55#20 (I)

SIZE 24

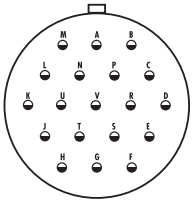

24-19
19#12 (I)

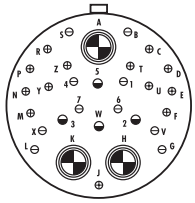

24-20
10#20 13#16 4#12
3 TWINAX #8 (N)

SIZE 24

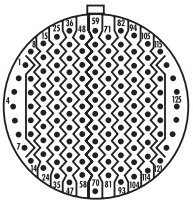

24-35
128#22D (M)

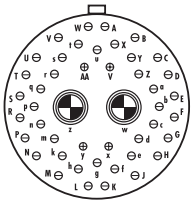

24-46
40#20 4#16 2#8 COAX (I)

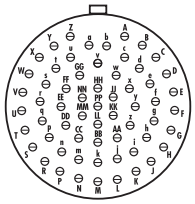

24-61
61#20 (I)

APPLICATION FLEXIBILITY

- Available in various shell sizes: 9 (1Q1), 17 (2Q2), 19 (4Q4), 21 (4Q4) and 25 (8Q8)
- Accepts standard backshells

RUGGED

- Designed for use with wire seal boots for sealing and optimized alignment
- Front metal-shell design provides a full ground plane

SAVES WEIGHT

- Lightweight composite rear shell available in size 19

Quadrax Connectors

Custom 38999-Style Series III Connectors

TE Connectivity (TE) offers the highly versatile Quadrax multi-signal contact system consisting of two differential pairs (matched impedance) used with quadraxial Ethernet and Fiber Channel cables.*

Specifications

ELECTRICAL

- **Bandwidth:** Up to 3 GHz
- **Data Rate:** >2 Gb/s
- **Characteristic Impedance:** 100Ω (± 10Ω)
- **Maximum Voltage Rating:** 500 V_{rms} @ sea level
- **Dielectric Withstanding Voltage:**
  1000 VAC_{rms} between any two contacts @ sea level
  500 VAC_{rms} between any contact and outer shell @ sea level

MATERIALS

- **Contacts, Shells, Ferrules:**
  Copper alloy with gold over nickel finish
  One-piece thermoplastic dielectric

MECHANICAL/ENVIRONMENTAL

- **Maximum Mating Force:** 2.75 lbf.
- **Minimum Unmating Force:** 1.25 lbf.
- **Durability:** 500 mating cycles

APPLICATIONS

- Commercial Avionics Systems
- Aircraft Data Networks
- Military Communications
- In-Flight Entertainment
- Space

STANDARDS AND TEST REPORTS

- **TE Product Specification:** 108-2199
- **TE Test Reports:** 501-660
- **Application Specifications:** 114-13163

*Metal ground plane only

The connectors in this section are unique for metal ground plane Quadrax applications and are only inter-mateable with connectors of the opposite gender in this catalog section.

Custom 38999-Style Series III Quadrax Connectors

Shell Size	Part No.	Type	Description
9	1738916	Receptacle	1Q1, FR-FR, Jam Nut Style, with PC Tail Contacts
	1811184	Receptacle	1Q1, FR-FR, PCB Mount with Stand-offs and PC Tail Contacts
	2157694	Receptacle	1Q1, RR-RR, Jam Nut Style
	1877384	Plug	1Q1, RR-RR
17	1877774	Receptacle	2Q2, RR-RR
	2157455	Receptacle	2Q2, FR-FR, PCB Mount
	2157695	Receptacle	2Q2, RR-RR, Jam Nut Style
	1877775	Plug	2Q2, RR-RR
19	1738974	Receptacle	4Q4, FR-FR, without PC Tail Contacts
	1877732	Receptacle	4Q4, FR-FR, with PC Tail Contacts
	1811901	Receptacle	4Q4, RR-RR
	2157696	Receptacle	4Q4, RR-RR, Jam Nut Style
	1811902	Plug	4Q4, RR-RR
	2221849	Receptacle	4Q4, with Threaded Mounting Holes
21	1954355	Plug	4Q4, RR-RR
	1954353	Receptacle	4Q4, FR-FR, with PC Tail Contacts
	2101633	Receptacle	4Q4, RR-RR, Flange Mount
23	1877921	Plug	6Q6, RR-RR
	1954577	Receptacle	6Q6, RR-RR
	2221366	Receptacle	6Q6, FR-FR, with PC Tail Contacts
25	1811928	Plug	8Q8, RR-RR
	1811927	Receptacle	8Q8, RR-RR
	2157628	Receptacle	8Q8, RR-RR, Jam Nut Style
	2101395	Receptacle	8Q8, FR-FR, with PC Tail Contacts
	1996625	Receptacle	8Q8, FR-FR, PCB Mount with Stand-offs and PC Tail Contacts

See TE Customer Drawing for finish options

Custom 38999-Style Series III Quadrax Connectors

Plug, Shell Size 9 Single Quadrax, RR-RR
Part No. 1877384

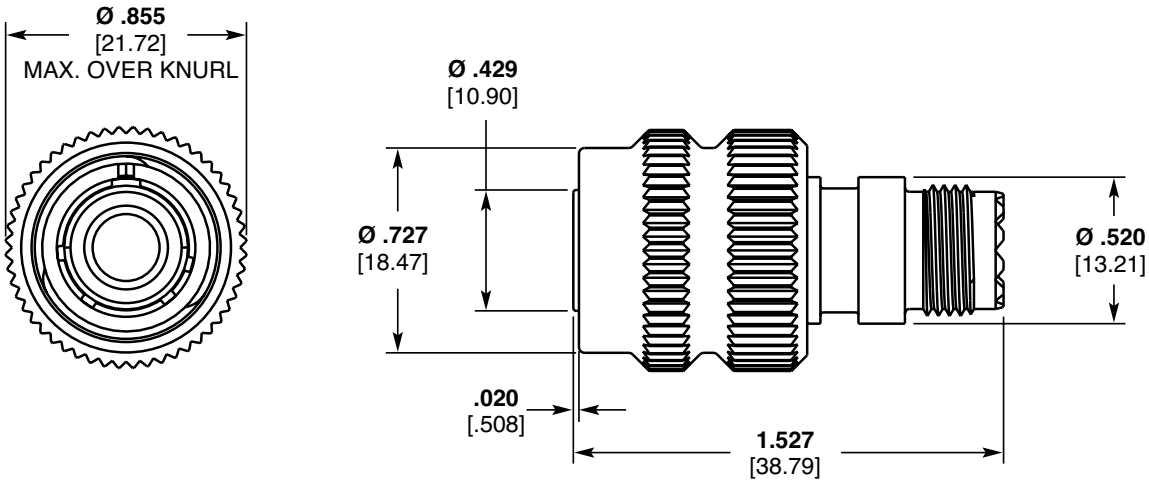

Custom 38999-Style Series III Quadrax Connectors

Receptacle, Shell Size 9, 38999 Style Single Quadrax, FR-FR Jam Nut Style
Part No. 1738916

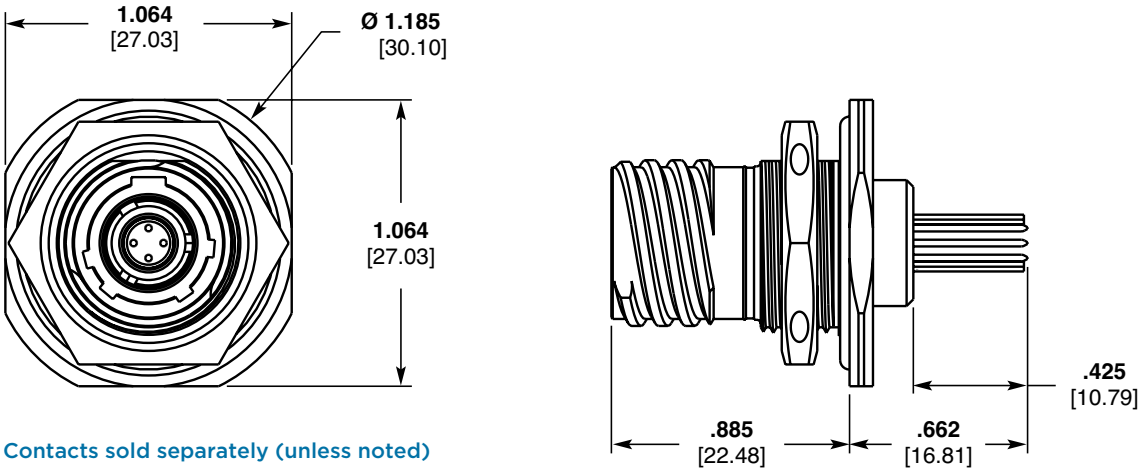

Contacts sold separately (unless noted)

Receptacle, Shell Size 9, Single Quadrax, FR-FRPCB Mount with Stand-offs
Part No. 1811184 (with PC tail contacts)

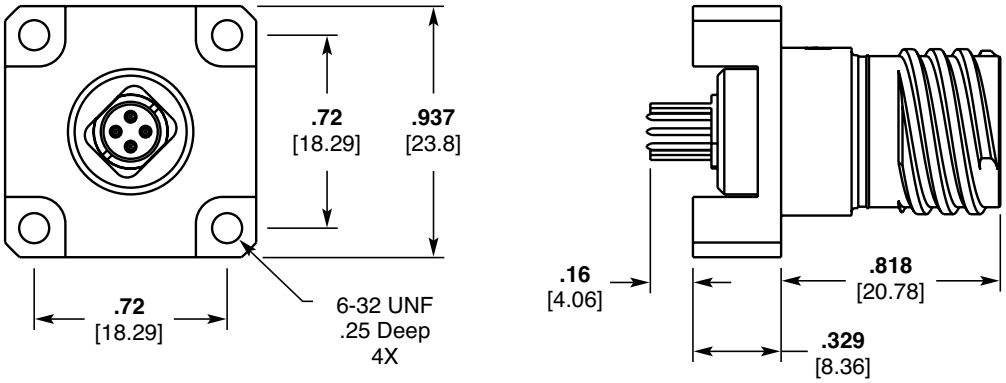

Receptacle, Shell Size 9, Single Quadrax, RR-RR Jam Nut Style
Part No. 2157694

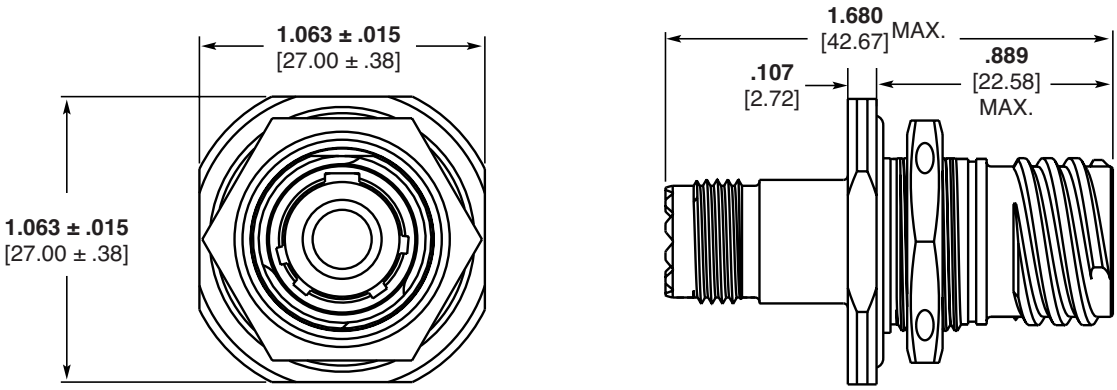

Custom 38999-Style Series III Quadrax Connectors

Plug, Shell Size 17, Arrangement 2Q2, RR-RR
Part No. 1877775

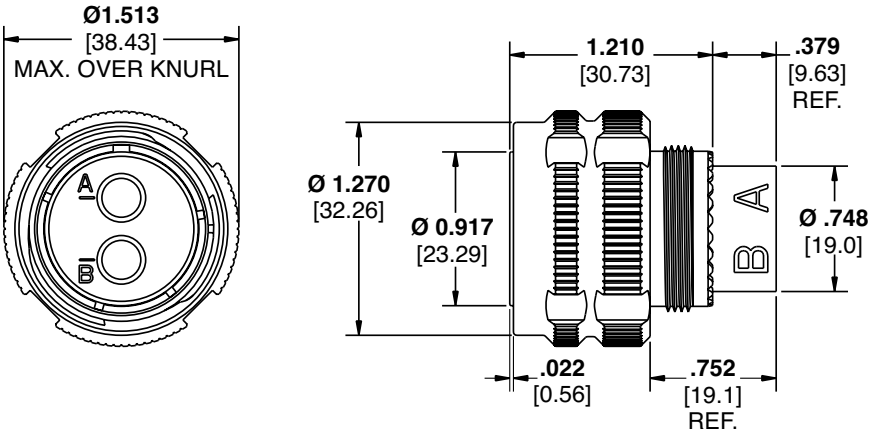

Receptacle, Shell Size 17, Arrangement 2Q2, RR-RR
Part No. 1877774

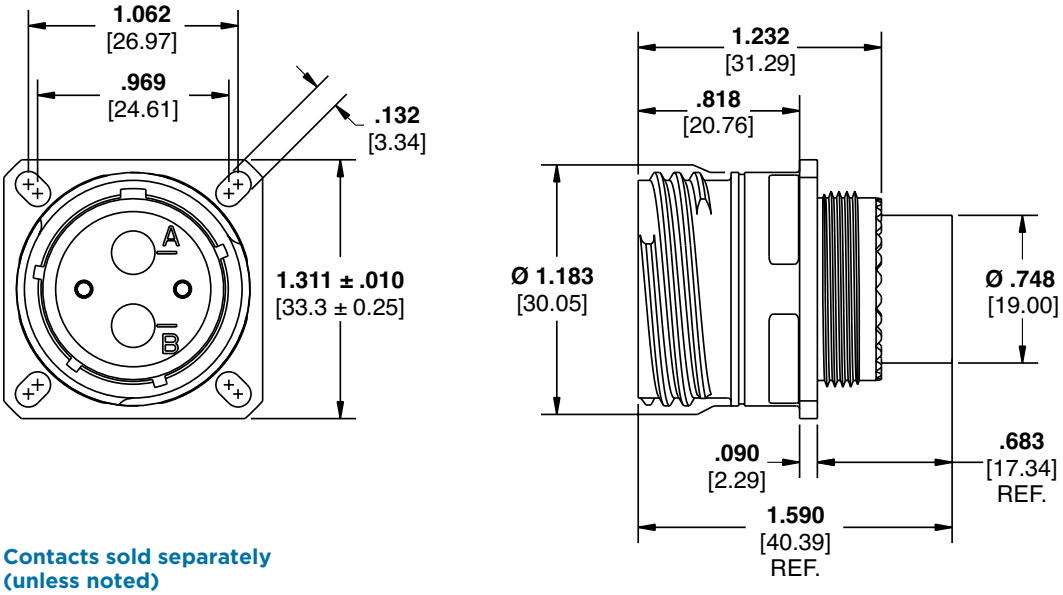

Contacts sold separately
(unless noted)

Custom 38999-Style Series III Quadrax Connectors

Receptacle, Shell Size 17, Arrangement 2Q2, FR-FR
Part No. 2157455

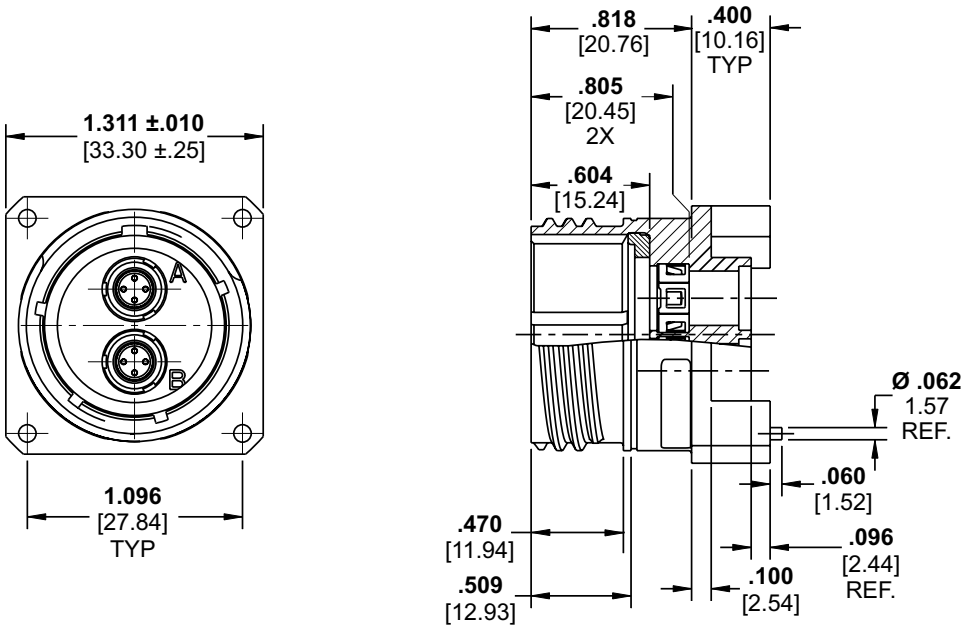

Receptacle, Shell Size 17, Arrangement 2Q2, RR-RRJam Nut Style
Part No. 2157695

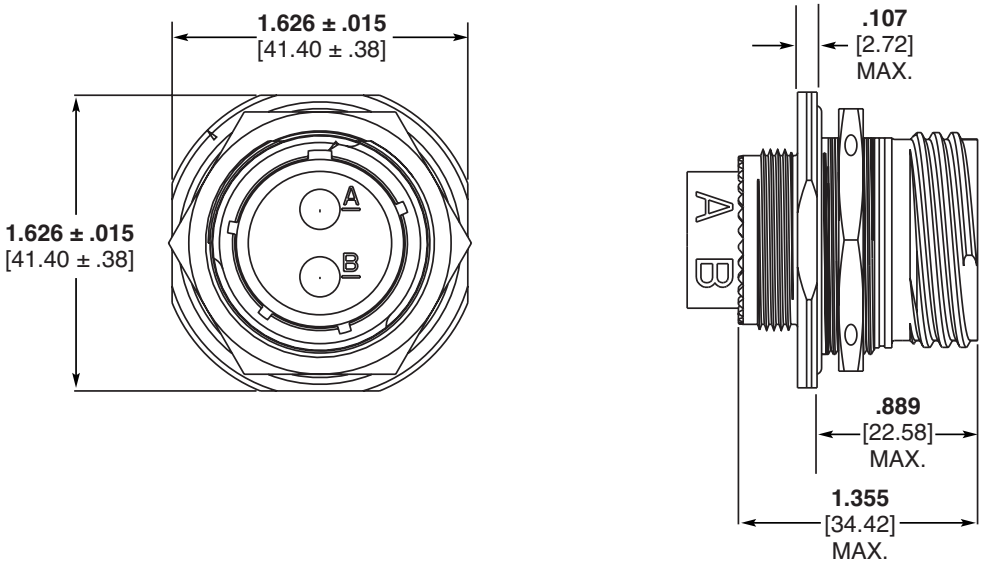

Custom 38999-Style Series III Quadrax Connectors

Plug, Shell Size 19, Arrangement 4Q4, RR-RR
Part No. 1811902

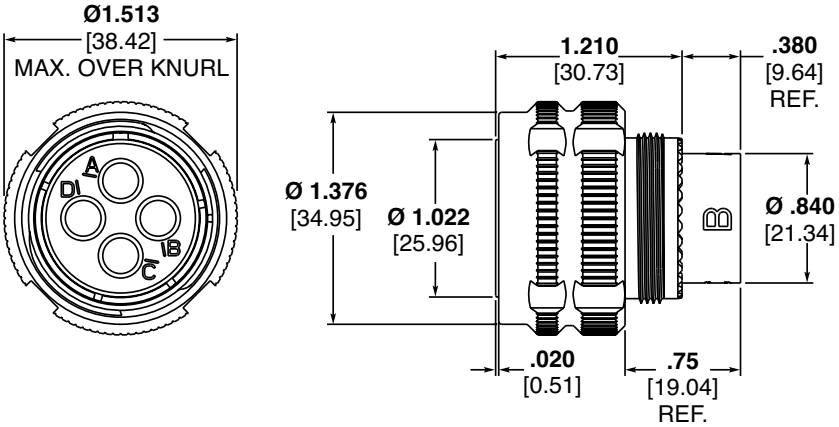

Receptacle, Shell Size 19, Arrangement 4Q4, RR-RR

Part No. 1877732
(w/ PC Tail Contacts)

Part No. 1738974
(connector only)

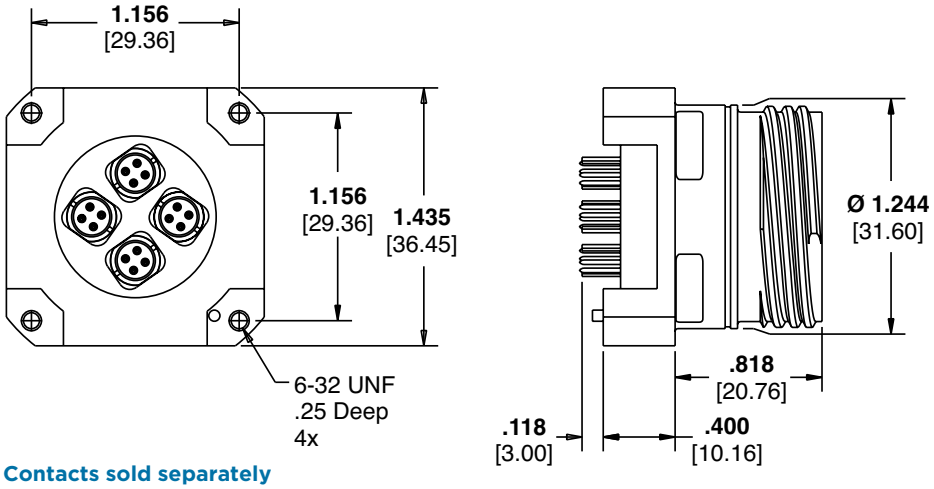

Contacts sold separately
(unless noted)

Custom 38999-Style Series III Quadrax Connectors

Receptacle, Shell Size 19, Arrangement 4Q4, RR-RR
Part No. 1811901

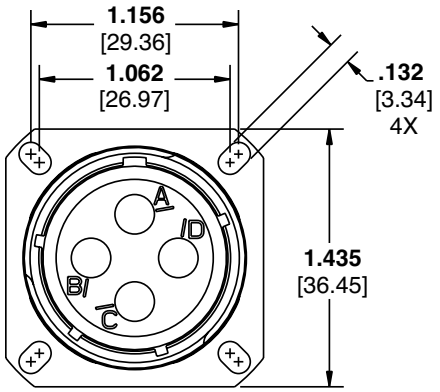

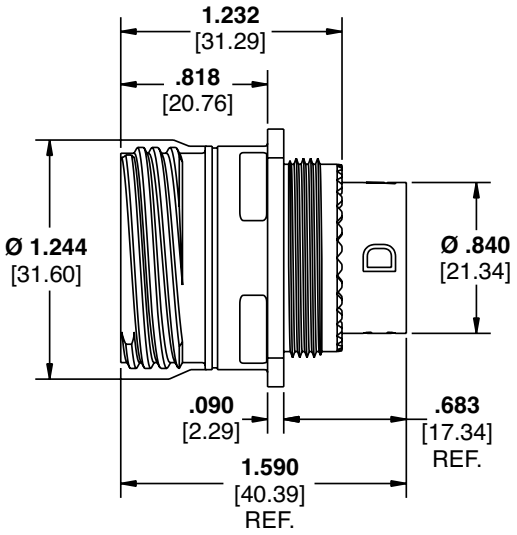

Receptacle, Shell Size 19, Arrangement 4Q4, RR-RR Jam Nut Style
Part No. 2157696

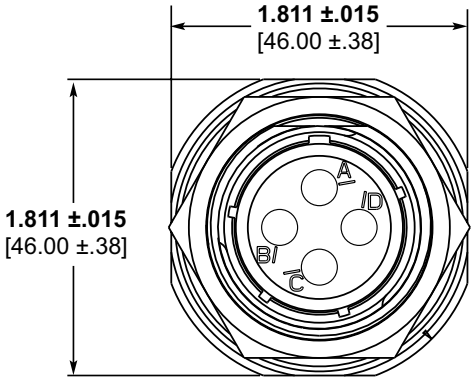

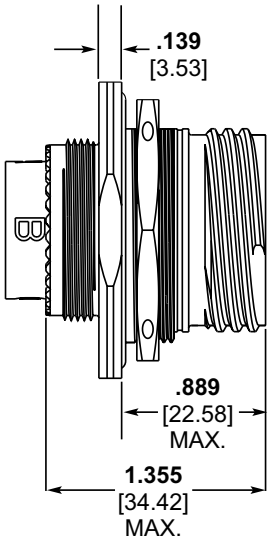

Custom 38999-Style Series III Quadrax Connectors

Receptacle, Shell Size 19 Arrangement 4Q4, With Threaded Mounting Holes
Part No. 2221849

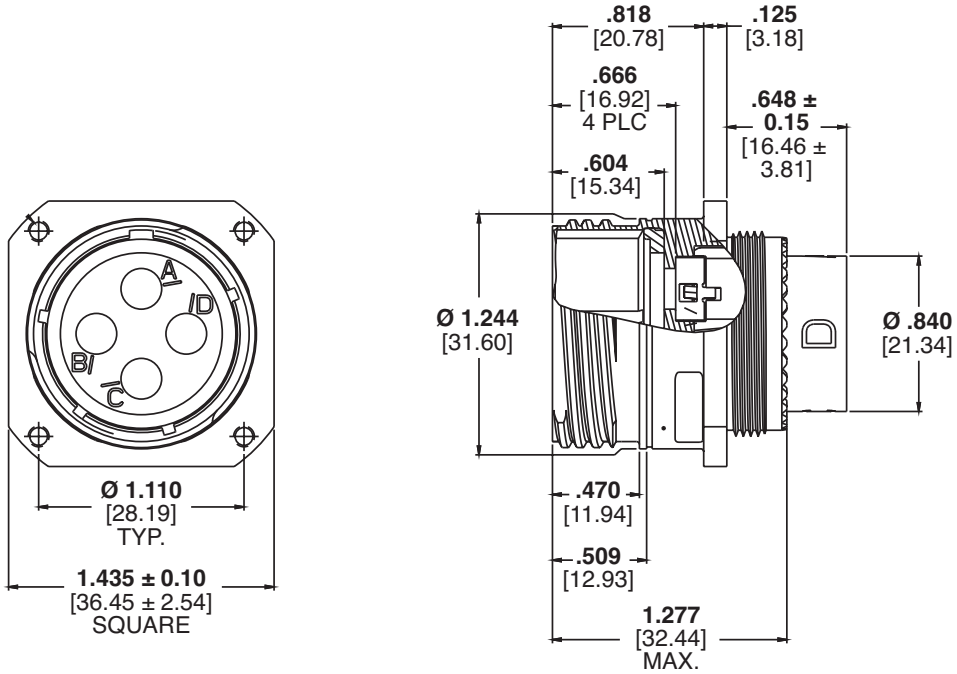

Plug, Shell Size 21, Arrangement 4Q4, FR-FR
Part No. 1954354

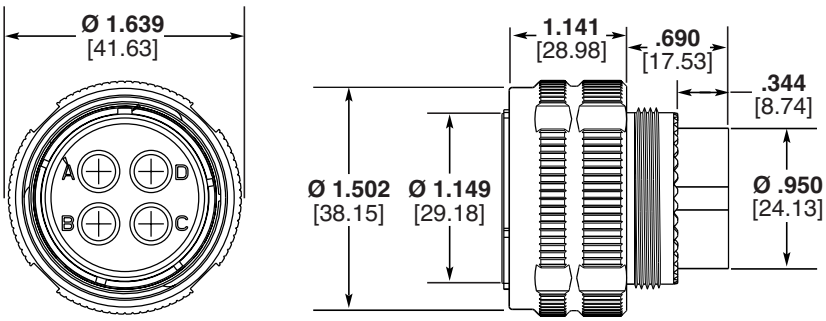

Custom 38999-Style Series III Quadrax Connectors

Receptacle, Shell Size 21, Arrangement 4Q4, FR-FR
Part No. 1954353

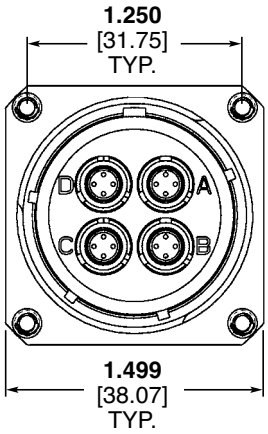

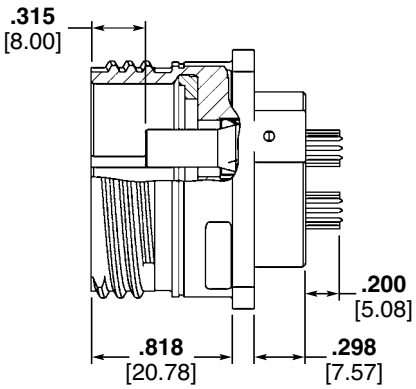

Receptacle, Shell Size 21 38999 Style Arrangement 4Q4, RR-RR Flange Mount
Part No. 2101633

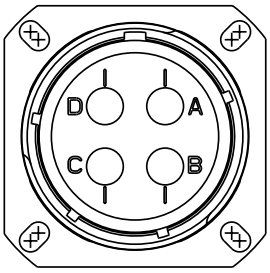

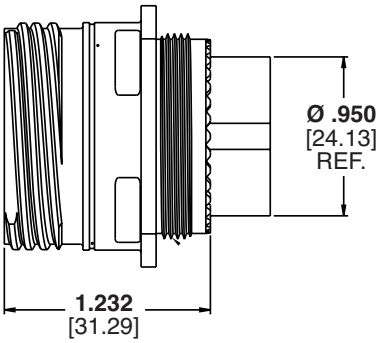

Plug, Shell Size 23, Arrangement 6Q6
Part No. 1877921

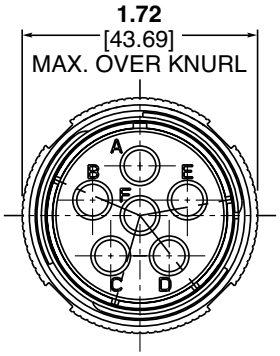

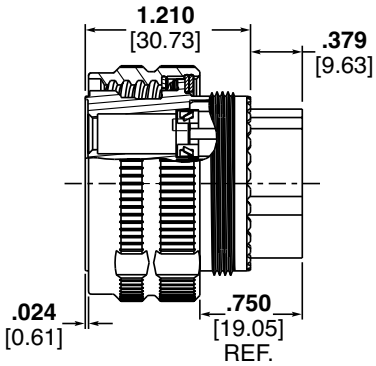

Contacts sold separately (unless noted)

Custom 38999-Style Series III Quadrax Connectors

Receptacle, Shell Size 23, Arrangement 6Q6,
Part No. 1954577

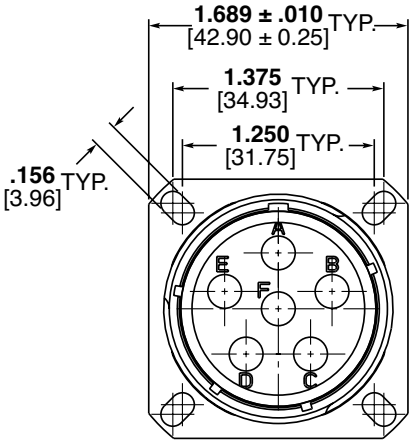

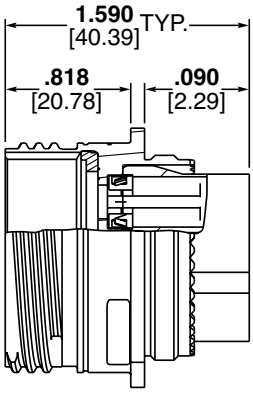

Receptacle, Shell Size 23 38999 Style, Arrangement 6Q6, PCB Mount
Part No. 2221366

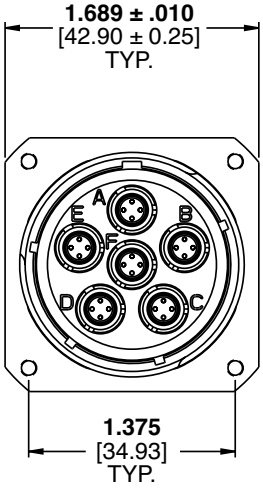

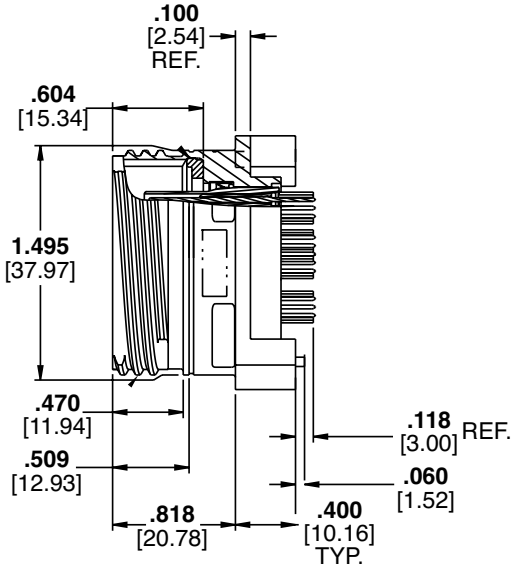

Custom 38999-Style Series III Quadrax Connectors

Plug, Shell Size 25, Arrangement 8Q8, RR-RR
Part No. 1811928

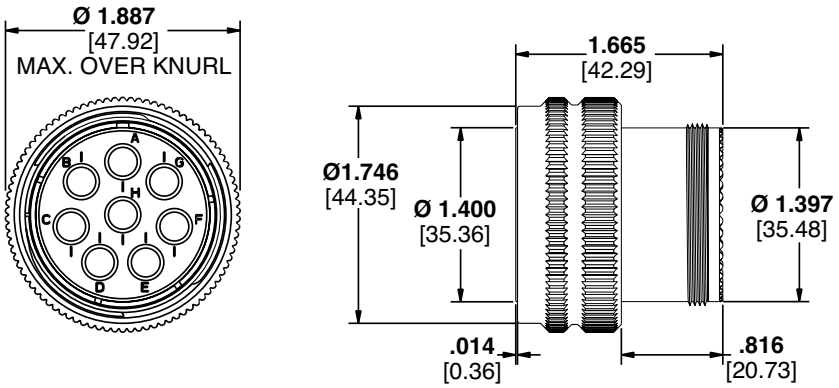

Receptacle, Shell Size 25 Arrangement 8Q8, RR-RR
Part No. 1811927

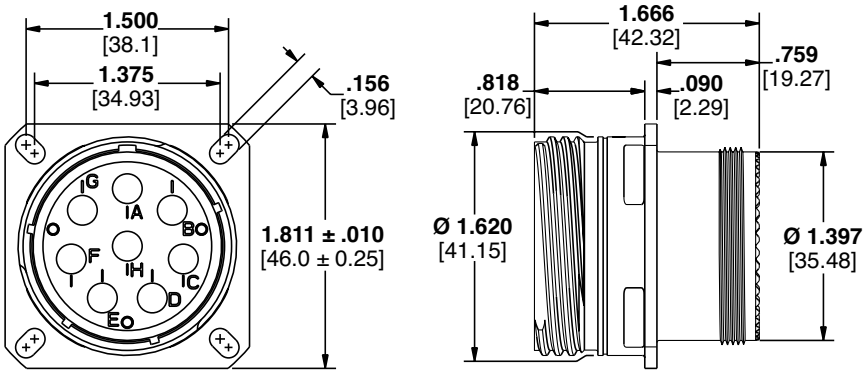

Receptacle, Shell Size 25 Arrangement 8Q8, FR-FR
Part No. 2101395 (w/ PC Tail Contacts)

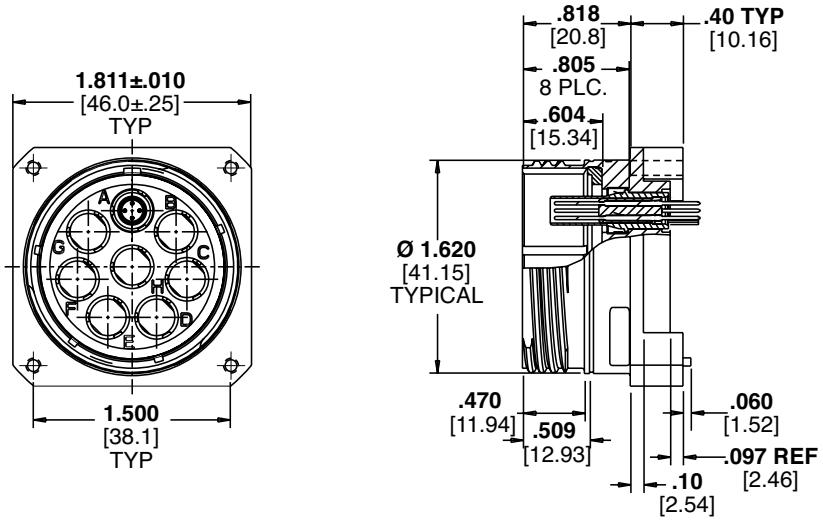

Custom 38999-Style Series III Quadrax Connectors

Receptacle, Shell Size 25 38999 Style, Arrangement 8Q8,RR-RR Jam Nut
Part No. 2157628

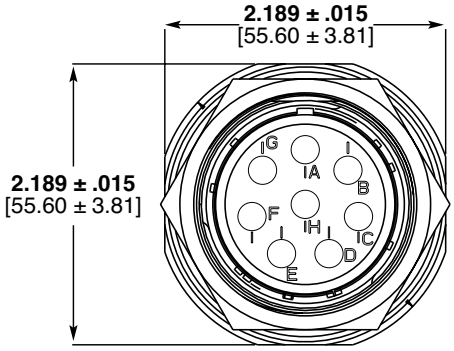

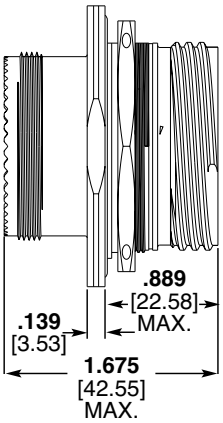

Contacts sold separately (unless noted)

Receptacle, Shell Size 25, Arrangement 8Q8, FR-FR
Part No. 1996625

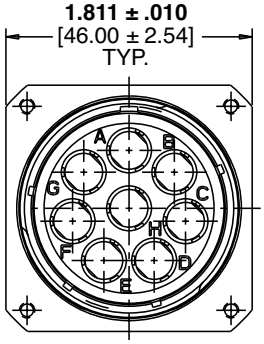

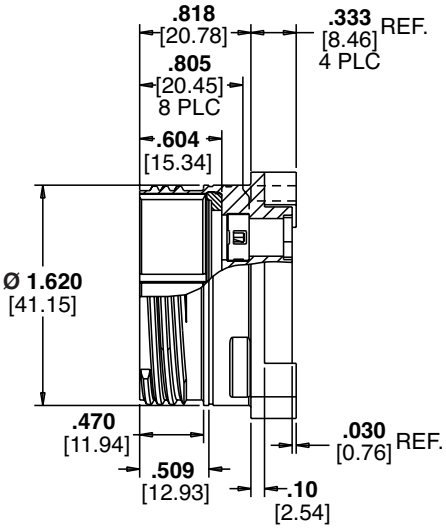

FAST, EASY ASSEMBLY

- One-piece dielectric inserts for easy assembly and to help lower applied cost
- Crimp type, screw machined, 24 AWG contacts
- Quadrax size 8 shells are keyed per ARINC 600 for correct orientation
- Asymmetric standoff leg provides built-in keying for direct attach to PC board

HIGH PERFORMANCE

- TE's Quadrax contacts support 100 Ω GbE and 150 Ω Fibre Channel
- Available silicone seal boots are rated for 50,000 ft. altitude immersion

VERSATILE

- Compatible with a wide range of rectangular and circular connectors
- Cable-applied crimp contacts and PC tail contacts for board-mount soldering

Quadrax Contacts

PC Tail Contacts, Pin

Part No.	Dim A	Notes
1445626-1	**5.79** .228	
1445626-2	**10.72** .422	
1445626-3	**4.60** .181	
1445626-4	**7.54** .297	
1445626-5	**7.54** .297	Solder Dipped Tails

Millimeters Inches

Crimp Contact Kits

Part No.		Hex Crimp	Wire Seal Boot
Pin	Socket		
1445692-1	1445693-1	**5.54** .218	No
1445692-3	1445693-3	**5.54** .218	Yes
1445692-4*	1445693-4*	—	Yes
Reference cables: NF24Q100, NF26Q100, 24443/03130X-4(LD), 24443/9P025X-4(LD); Raychem CEC-RWC-18687, Raychem CEC-RWC-18664			
1445692-5	1445693-5	**5.54** .218	Yes
1445692-6	1445693-6	**5.54** .218	No
Reference cables: F4703-3, F4704-4 (Insulation Diameter Is Larger)			
1877039-1	1877040-1	**5.87** .231	No
1877039-2	1877040-2	**5.87** .231	Yes
Reference cables: 26473/02006X-4(LD); Raychem CEC-RWC-18684, Raychem CEC-RWC-18680			

Millimeters Inches

* Qualified to Boeing BACC47GA1 (Pin) and BACC47GB1 (Socket)

Crimp Contacts with Heat-Shrink Tubing

Part No.		Hex Crimp
Pin	Socket	
1811269-1	1811010-1	**5.54** .218

Millimeters Inches

Direct Attach PCB Contacts

Part No.	Impedance	Tail Length	Dim A
1954576-1	150 Ohms	**3.18** .125	**6.86** .270
1954576-2	100 Ohms	**3.18** .125	**6.86** .270
1954576-3	100 Ohms	**5.21** .205	**6.86** .270

Millimeters Inches

Differential Twinax Contacts

Part No.		Hex Crimp
Pin	Socket	
1811865-1	1811866-1	**5.54** .218

Millimeters Inches

Quadrax Contacts

PC Tail Contacts

Part No.	Type	Dim A	Notes
187-0095-01	Pin	**7.00** .276	ARINC 600, FAST
187-0095-06		**8.10** .319	
187-0095-21		**7.00** .276	
187-0095-26		**8.10** .319	
187-0178-08	Pin	**11.40** .449	FDBA 50, FAST
187-0121-01	Pin	**6.35** .250	ARINC 600, FAST, FDBA
187-0121-08		**7.45** .293	
187-0121-21		**6.35** .250	
187-0121-26		**7.45** .293	
187-0136-08	Socket	**7.30** .287	ARINC 600, FAST, FDBA
187-0206-08	Pin	**12.50** .492	MIL-DTL-38999 Series I, II, and III
187-0281-08	Pin	**6.80** .268	983 Series (Arrangement 20-04)

Millimeters Inches

Crimp Contacts

Part No.	Type	Standard	Notes
187-0205-08A*	Socket	EN3155-075F	DMC-M
187-0204-08A*	Pin	EN3155-074M	DMC-M
187-0109-08	Socket	ABS 0974	ARINC 600, FAST, FDBA, 983 Series
187-0108-08	Pin	ABS 0973	ARINC 600, FAST, FDBA, 983 Series
187-0110-08	Pin	GSC-01-31869-00**	—
187-0191-08	Socket	HDDS 105 Specific	ARINC 600, FAST

*"A" suffix indicates sealing sleeve
** Gore cable specific

Quadrax Contacts (continued)

Size 8 Quadrax
PCB Pin Contact
Front Release/
Front Remove Design
Part No. 1445626-1**
** various tail lengths

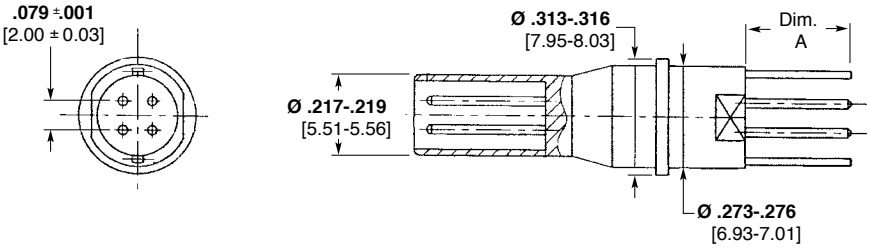

Blank
Front Release/
Front Remove Design
Part No. 1604940-2

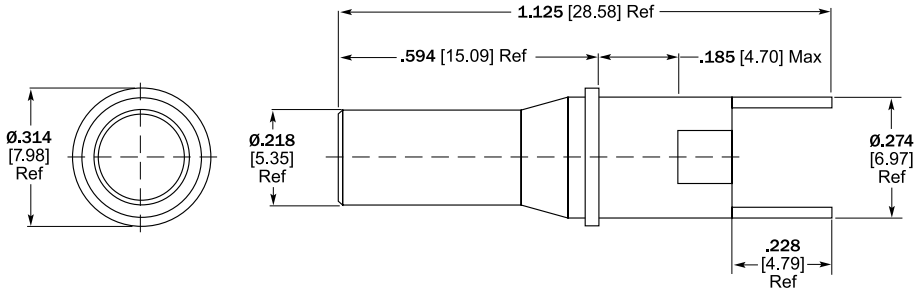

Size 8 Quadrax
Pin Contact —
Crimp Style
Rear Release/
Rear Remove Design
Part No. 1445692-1*
* -3 with boot

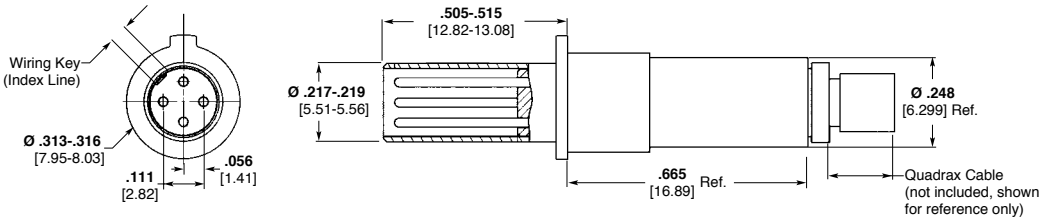

Size 8 Quadrax
Socket Contact —
Crimp Style
Rear Release/
Rear Remove Design
Part No. 1445693-1*
* -3 with boot

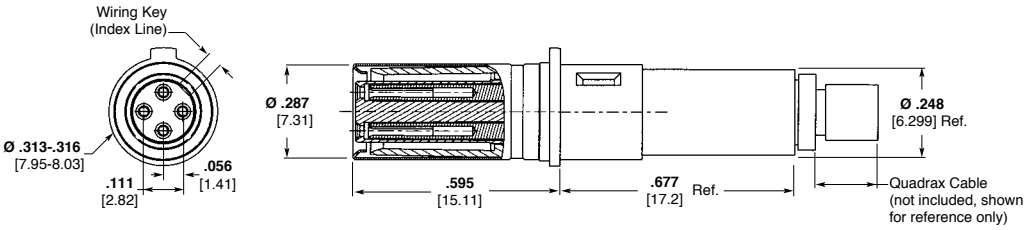

Quadrax Contacts (continued)

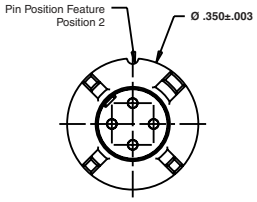

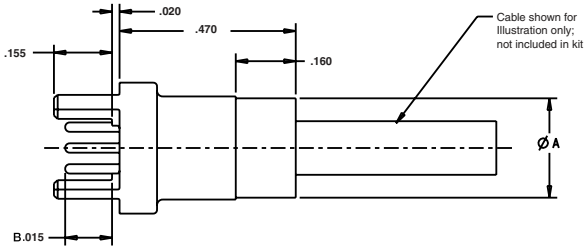

PC Tail Contact – Direct Attach to PCB

- 100 and 150 ohm Systems
- Simple Direct Attach to PCB without connector for component reduction
- Designed from ARINC size 8 Quadrax contacts
- Low cost solution from both assembly and component ends

Part Number 1954576-1, -2: B = .125
Part Number 1954576-3: B = .205

Part No.	Impedance (Ω)	Dim A (Max)	Dim B
1954576-1	150	**6.86** [.270]	**3.18** [.125]
1954576-2	100	**6.35** [.250]	**3.18** [.125]
1954576-3	100	**6.35** [.250]	**5.21** [.205]

Millimeters [Inches]

Size 8 Differential Twinax Contacts

100 Ohm Differential Pair Twinax Contact

- Designed to help meet the requirements of ARINC Specification 810 for 100 ohm size 8 non-concentric twin-axial contacts
- Works in all connectors accepting ARINC 600 style Quadrax contacts

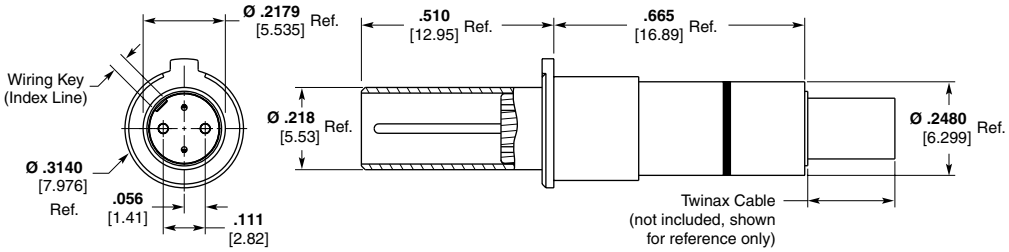

Part No. 1811865-1

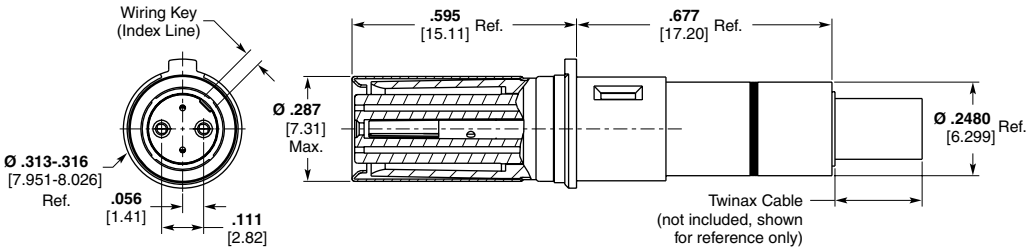

Part No. 1811866-1

Quadrax/Twinax Contact Accessories

Size 8 Quadrax Extraction Tool
Part No. 1738894-1

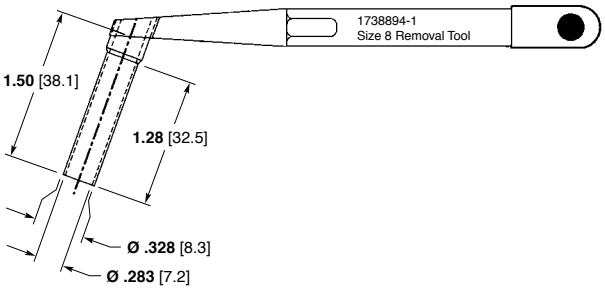

Seal Boots

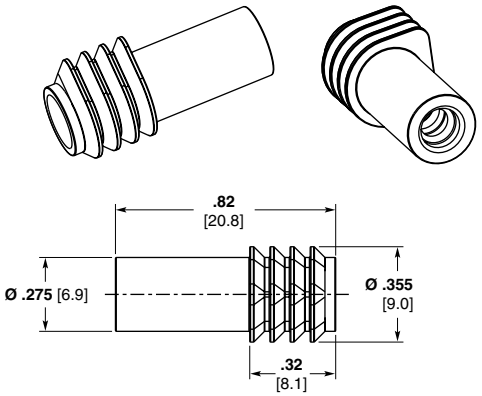

Wire Seal Boot
Part No. 1811481-1
Cable O.D. .145–.175
.218 Hex Crimp

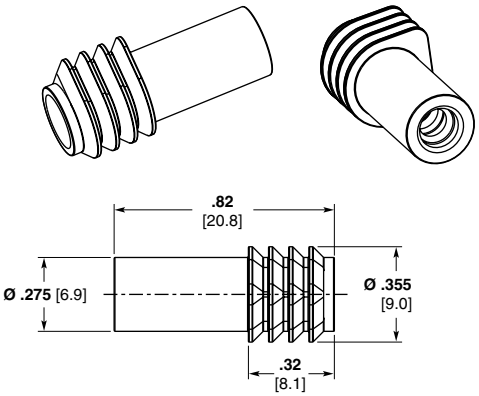

Wire Seal Boot
Part No. 1811943-1
Cable O.D. .170–.200
.231 Hex Crimp

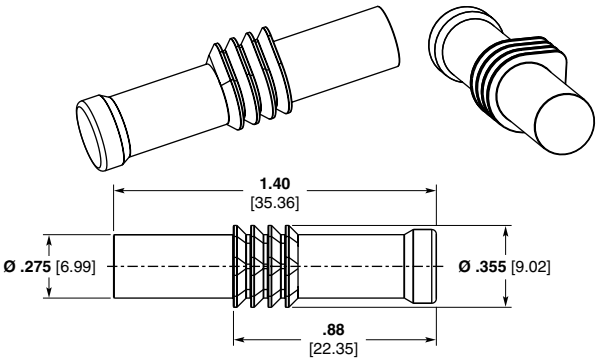

Solid Seal Boot
Part No. 1811633-1

RUGGED

- MIL-DTL-32546 style
- Zero bit error rate
- Proven AS39029 crimp contacts
- Uses 38999-style shell

FAST AND QUIET

- 1 G or 10 GbE data delivery
- Excellent impedance matching and minimal crosstalk
- Size 25 shell supports up to four Ethernet channels

HIGH PERFORMANCE

- Designed for use in rugged environments
- Ideal choice for 10G Ethernet, IEEE 1394, USB 2.0 and other high-speed protocols
- Optimized shielding arrangement for superior signal integrity

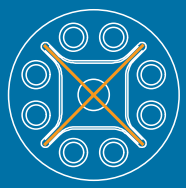

CONVENIENT

- Fast field assembly, termination, and repair
- Available with aluminum or composite shells with a variety of finishes
- Install/repair using standard insertion/removal and crimping tools
- Range of inserts available for Size 25 shell for other connectivity needs

CeeLok FAS-X Connectors

The High-Performance, Rugged Solution for High-Speed Networks

CeeLok FAS-X connectors with AS39029 contacts were designed for rugged environments and help to provide reliable, consistent high-speed performance.

RJ45 connectors in 38999 shells are much larger than the CeeLok FAS-X connector (shell size 19 versus shell size 11). Additionally, the insulation displacement crimp technology may be unsuitable for use in certain harsh environments for which the M39029 crimp contacts used in the CeeLok FAS-X connector were intentionally designed.

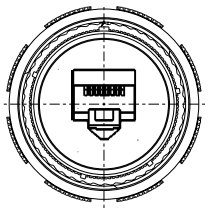

RJ45
One Ethernet Channel
Size 19 Shell
38.35 mm [1.51"] Dia.

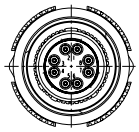

CeeLok FAS-X Connector
One Ethernet Channel
Size 11 Shell
24.89 mm [0.98"] Dia.

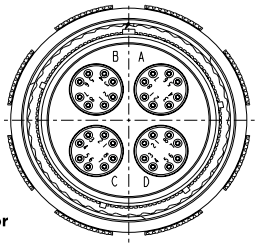

CeeLok FAS-X Connector
Four Ethernet Channels
(Equivalent to four RJ45s)
Size 25 Shell
47.75 mm [1.88"] Dia.

CeeLok FAS-X Connectors

Performance Characteristics

APPLICATIONS

- Military and Aerospace High-Speed Networking
- Gigabit Ethernet and 10G Ethernet Networks
- IEEE 1394b I/O
- Fibre Channel Networks
- Modular 38999

MECHANICAL/ENVIRONMENTAL

- **Temperature Rating:** -65°C to +200°C
- **Mating Cycles (Min.):** 500
- **Plug Diameter:** 0.984" and 1.889" (24.99 mm and 47.98 mm)
- **Sealing IP Rating:** IP67
- **Sealing Altitude Immersion:** 50,000'

ELECTRICAL DATA

- **Dielectric Withstanding Voltage:** 1300 VAC
- **Contact Current Rating (Amps/Contact):** 5

MATERIALS

- **Shells:** Aluminum or composite, nickel plated
- **Contact Finish:** Gold

STANDARDS AND TEST REPORTS

- **TE Qualification Test Reports:** 10065 and 20101203

Excellent Signal Integrity at Gigabit Rates

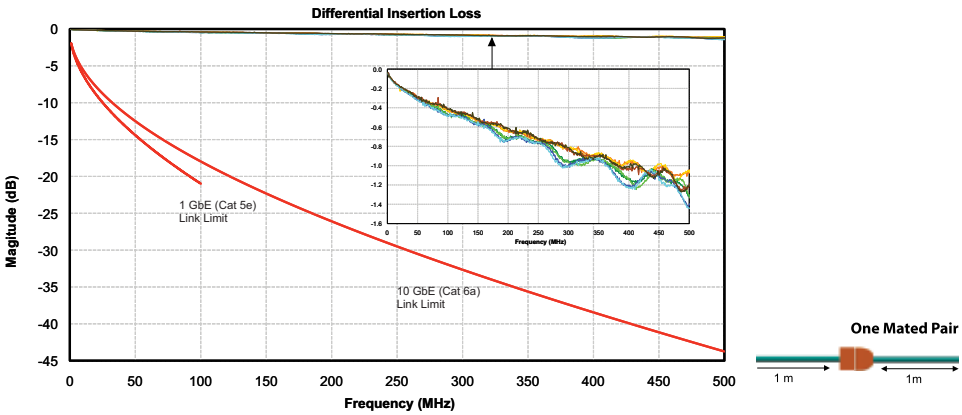

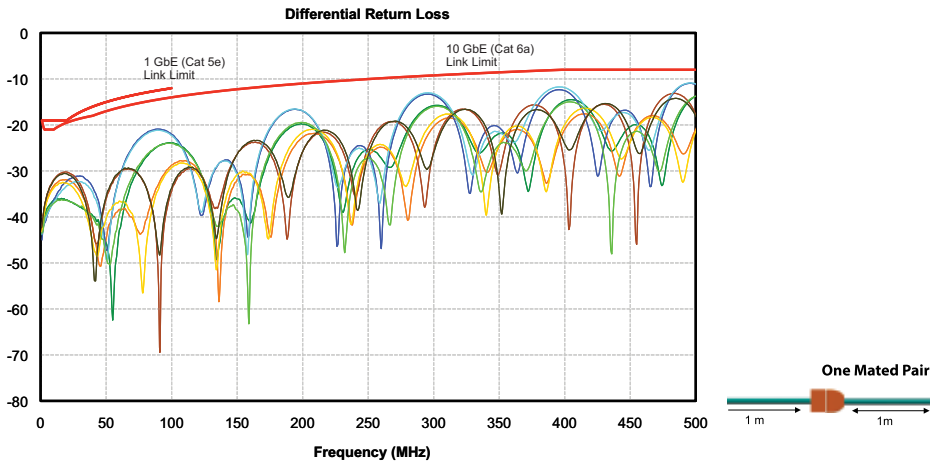

Excellent Impedance Matching

CeeLok FAS-X connectors are designed to maintain a highly matched 100-ohm impedance, with excellent signal integrity.

More High-Frequency Headroom

The design and close impedance matching of the CeeLok FAS-X connector helps give you more performance margin to tolerate noisy environments that are sensitive to harmful interference.

Zero Bit Error Rate (BER) under Rugged Testing

The CeeLok FAS-X connector was tested by TE for bit errors for a high speed signal (1.0625 Gb/s) while simultaneously being subjected to random vibration and temperature cycling between -65°C and +200°C. No bit errors were detected.

For more information, request Test Reports 10065 and 20101203 from TE.

Differential NEXT

D38999 Size 11 Connector
MOD Def Standard 23-04 Pinout

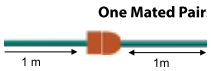

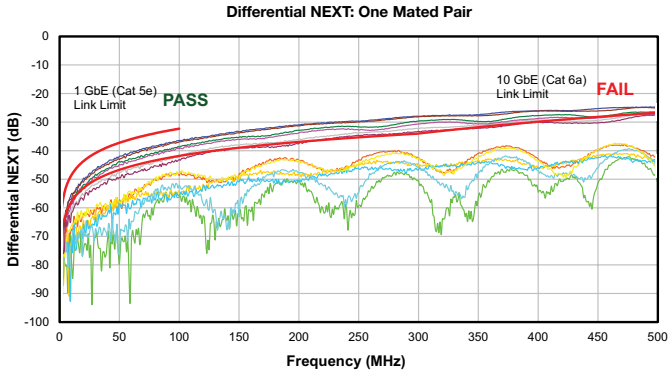

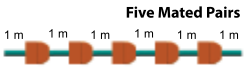

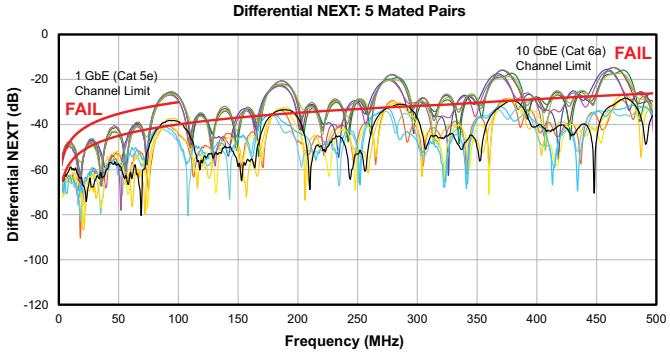

CeeLok FAS-X Connector

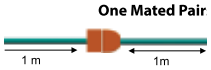

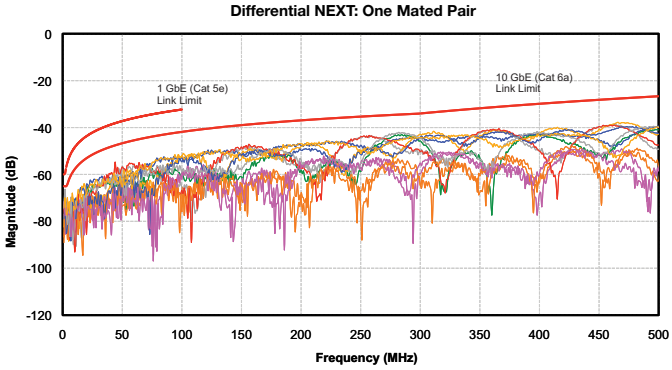

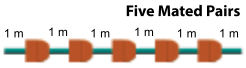

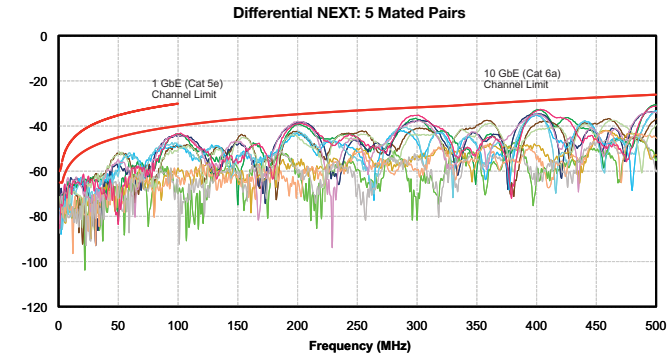

Mil Connectors

ORDERING INFORMATION

Part Numbering System

CFX20 J 2532 P Z N xxx

GENERAL IDENTIFIER

- **CFX20** Square Flange Receptacle (38999)
- **CFX21** In-Line Receptacle (38999)
- **CFX24** Jam Nut Receptacle (38999)
- **CFX26** EMI/RFI Plug (38999)
- **CFX30** Square Flange Receptacle (Braid Clamp Backshell)
- **CFX34** Jam Nut Receptacle (Braid Clamp Backshell)
- **CFX36** EMI/RFI Plug (Braid Clamp Backshell)
- **CFX50** Square Flange Receptacle (Push-Pull Lanyard) (81703)
- **CFX54** Jam Nut Receptacle (Push-Pull Lanyard) (81703)
- **CFX58** Plug (Push-Pull Lanyard) (81703)
- **CFX59** Rack-and-Panel Plug (Push-Pull Lanyard) (81703)

CLASS (MATERIAL AND FINISH)

- **M** Nickel-Plated Composite
- **J** O. D. Cadmium-Plated Composite
- **F** Nickel-Plated Aluminum
- **W** O. D. Cadmium-Plated Aluminum
- **A** Passivated Stainless Steel
- **T** PTFE Nickel-Plated Aluminum
- **Z** Black Zinc Nickel-Plated Aluminum

SHELL SIZE AND CONTACT ARRANGEMENT

- **1108** Single-Channel, Shell Size 11, 8 Size 22 Contacts
- **2532** Quad-Channel, Shell Size 25, 32 Size 22 Contacts
- **1104** Single-Channel Fibre Channel, Shell Size 11
- **2516** Quad-Channel Fibre Channel, Shell Size 25
- **2500** Quad-Channel, Shell Size 25, No Inserts or Contacts

CONTACT TYPE AND PLATING

- **P** Pin, Selective Gold Plating
- **S** Socket, Selective Gold Plating
- **F** Pin, Full Gold Plating
- **G** Socket, Full Gold Plating
- **H** Pin, High-Reliability Finish
- **J** Socket, High-Reliability Finish
- **A** No Pin Contacts Included
- **B** No Socket Contacts Included

TERMINATION TYPE

- **Z** Crimp
- **A** .232" Long Solder Tail (Contact TE for other tail lengths)

KEYING POSITIONS

N, A, B, C, D, E (N is normal)

MODIFICATIONS

- **-1A** Without Backshell
- **-1077** Without Grommet

Single-Channel D38999 Circular, Shell Size 11

Square Flange Receptacle

CFX20*1108***

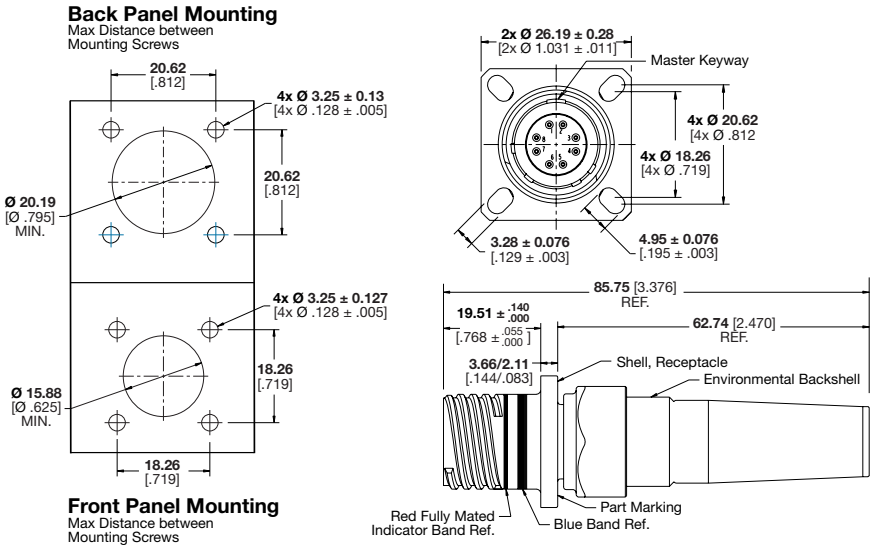

Jam Nut Receptacle

CFX24*1108***

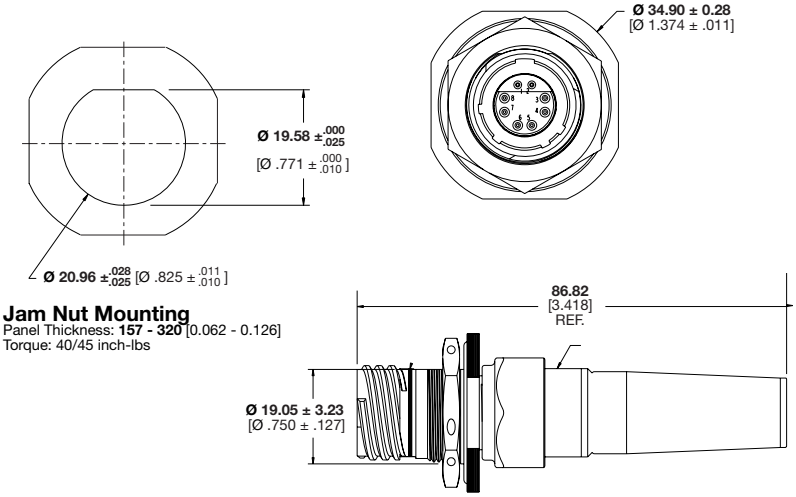

Plug

CFX26*1108***

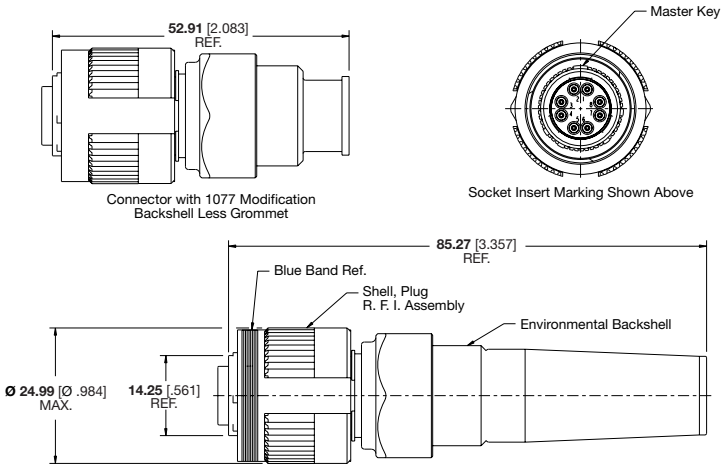

Single-Channel D38999 Circular, Shell Size 11, PCB Mount

Square Flange Receptacle

CFX20*1108***

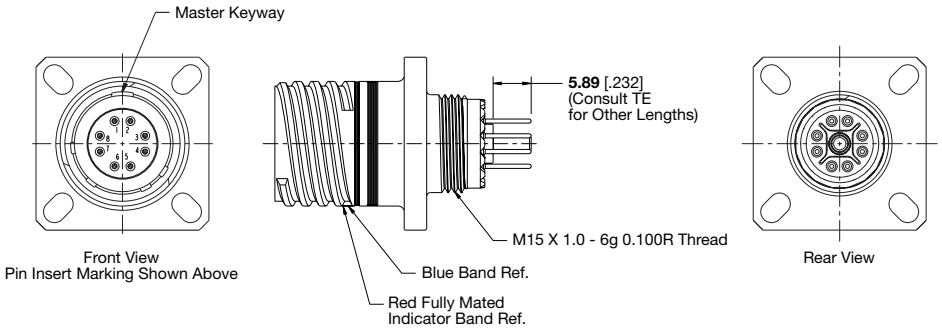

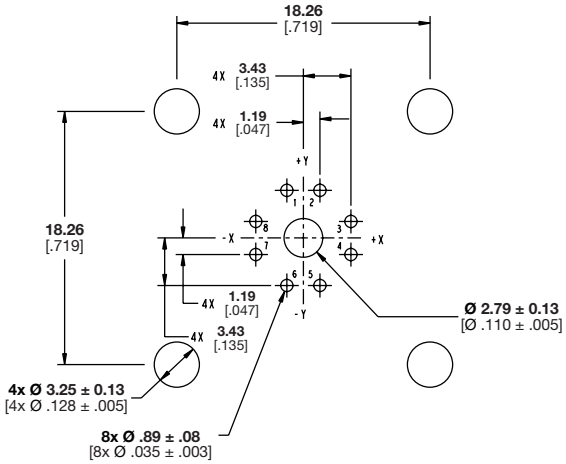

Single-Channel D38999 Circular, Shell Size 11, PCB Mount

Jam Nut Receptacle

CFX24*1108***

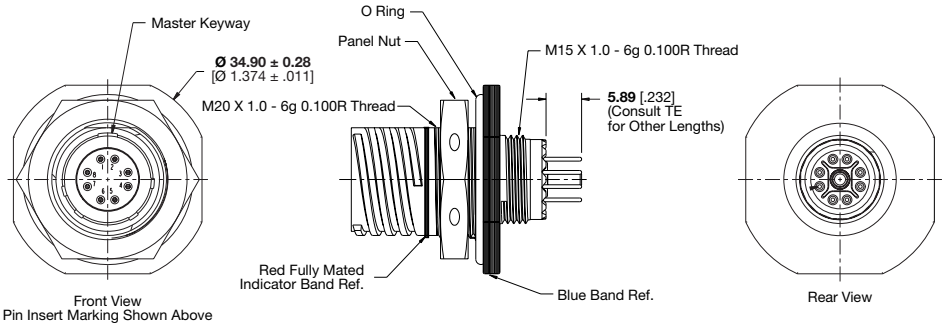

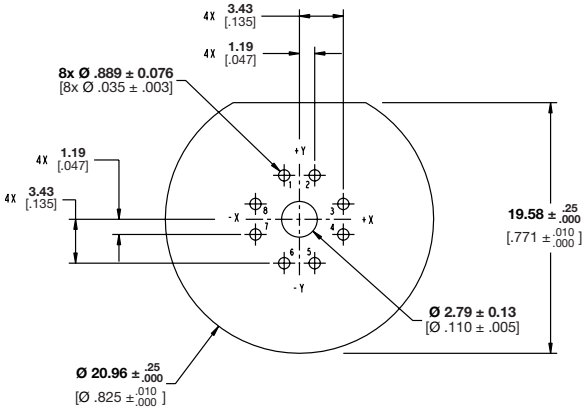

Commercial Single-Channel Circular, Shell Size 11

Square Flange Receptacle with Braid Clamp Backshell

CFX30*1108***

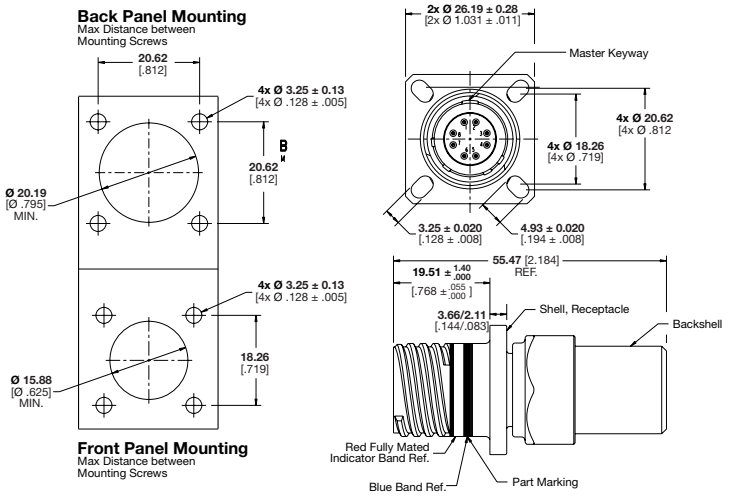

Jam Nut Receptacle with Braid Clamp Backshell

CFX34*1108***

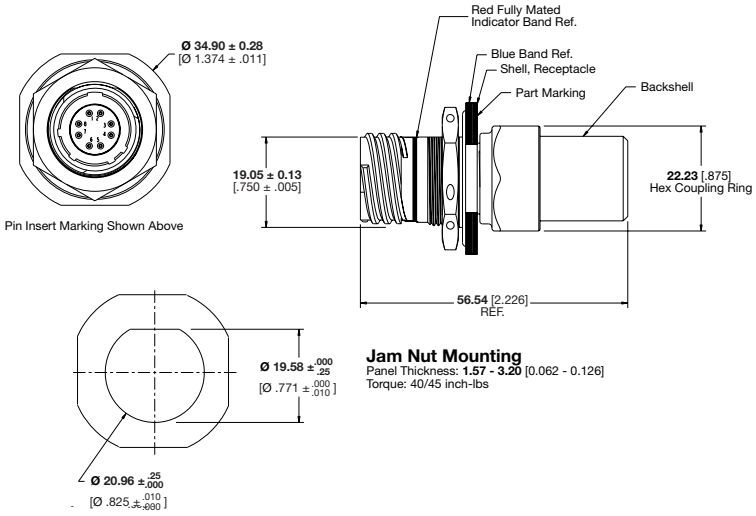

EMI/RFI Plug with Braid Clamp Backshell

CFX36*1108***

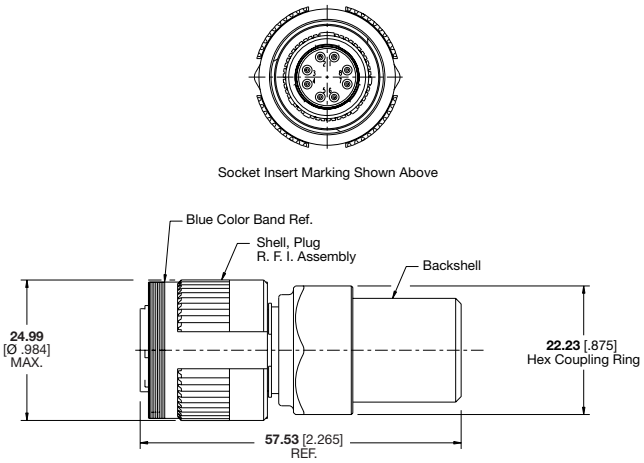

Quad-Channel D38999 Circular, Shell Size 25

Square Flange Receptacle

CFX20*2532***

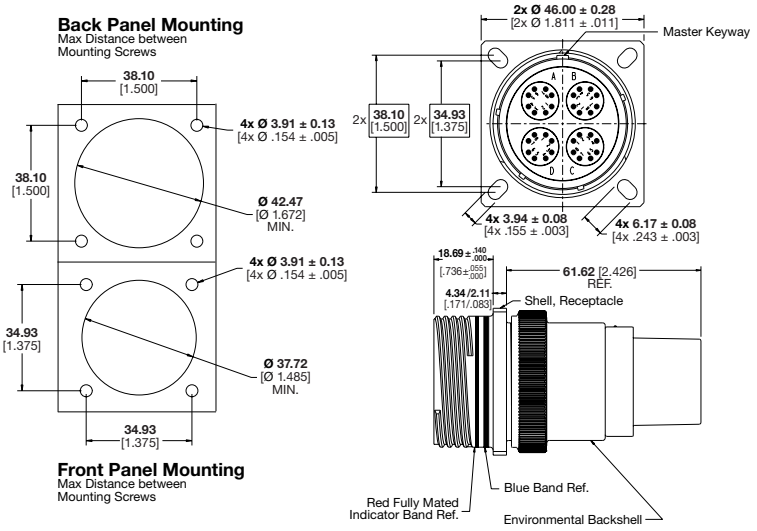

Jam Nut Receptacle

CFX24*2532***

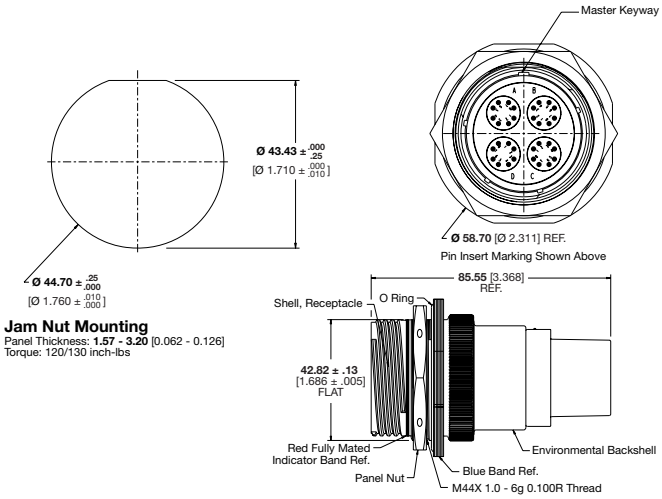

Plug

CFX26*2532***

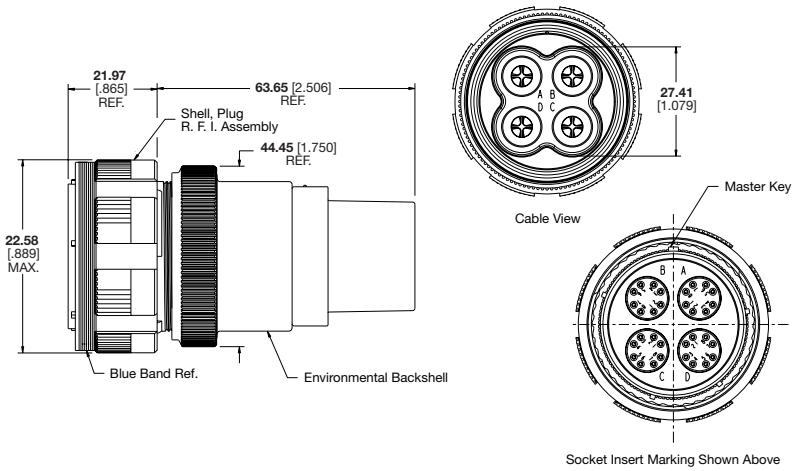

Quad-Channel D38999 Circular, Shell Size 25

Square Flange Receptacle

CFX20*2532***

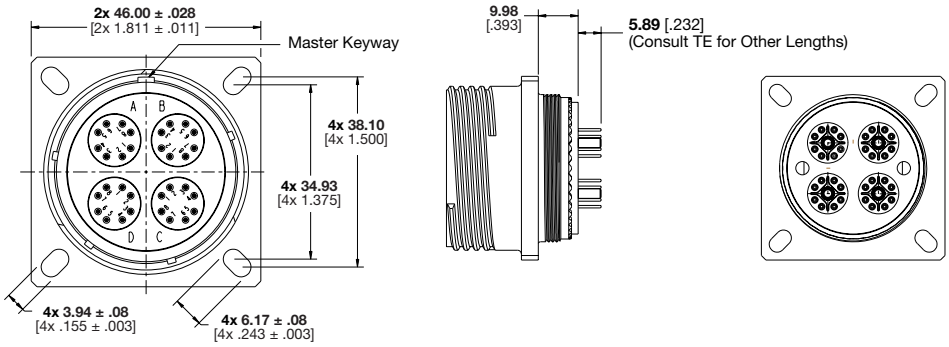

PCB Layout

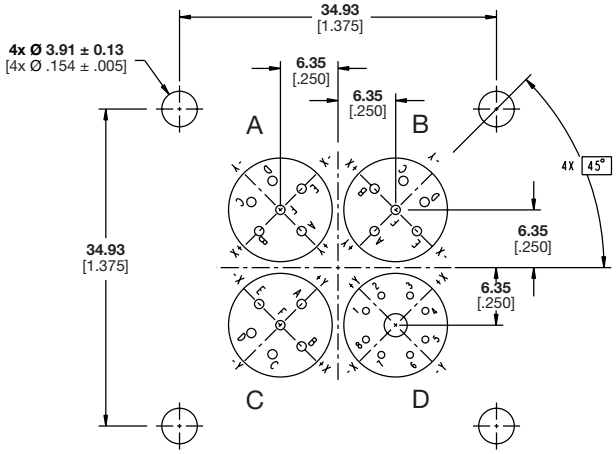

Quad-Channel D38999 Circular, Shell Size 25

Jam Nut Receptacle

CFX24*2532***

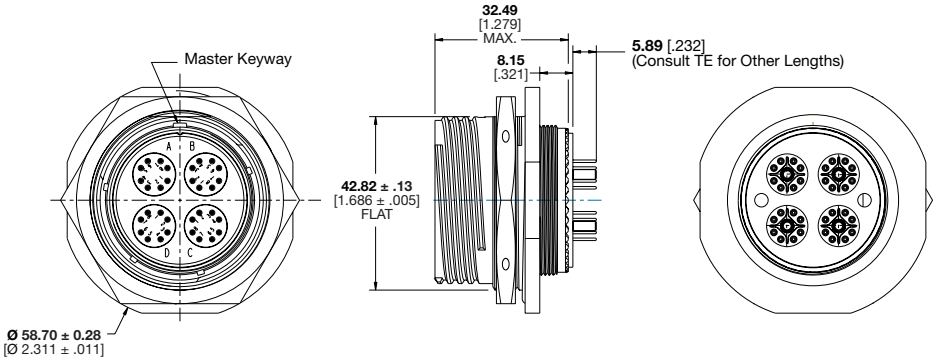

PCB Layout

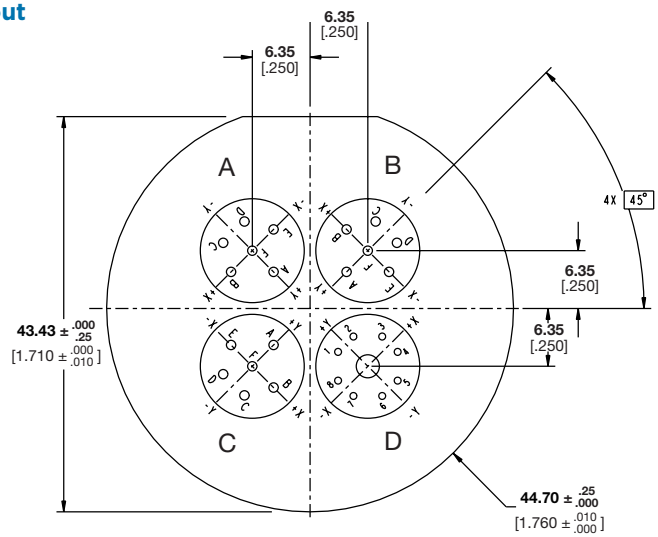

CeeLok FAS-X Connector Modules

Ceelok FAS-X connectors are also available with a variety of modules to accommodate various counts of Size 22, 20, and 16 contacts in a Size 25 shell. Such capabilities help provide a convenient mixture of signal and power through the connectors.

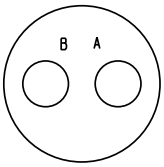

11-02
2 Size 16 Contacts

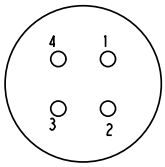

11-H4
4 Size 22 Contacts

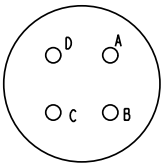

11-04
4 Size 20 Contacts

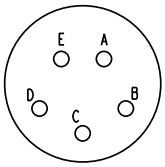

11-05
5 Size 20 Contacts

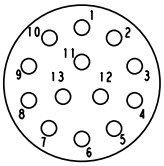

11-35
13 Size 22 Contacts

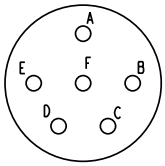

11-98
6 Size 20 Contacts

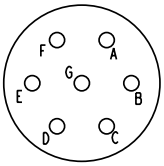

11-99
7 Size 20 Contacts

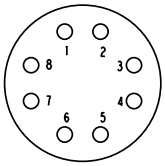

11-H8
8 Size 22 Contacts

MFX 1105 P Z

PRODUCT LINE

MFX CeeLok FAS-X Connector Modules

SHELL SIZE (11)/CONTACT ARRANGEMENT

1102 2 Size 16 Contacts
11H4 4 Size 22 Contacts (High-Speed Insert Optimized for 150-Ohm Quad Cable)
1104 4 Size 20 Contacts
1105 5 Size 20 Contacts
11H8 8 Size 22 Contacts (High-Speed Insert Optimized for 4-Pair 100-Ohm Differential Cables)
1135 13 Size 22 Contacts
1198 6 Size 20 Contacts
1199 7 Size 20 Contacts

CONTACT PLATING

P Pin, Localized Gold Finish
S Socket, Localized Gold Finish
F Pin, Full Gold Finish
G Socket, Full Gold Finish
H Pin, High-Reliability Finish
J Socket, High-Reliability Finish
A Less Pin
B Less Socket

TERMINATION TYPE

Z Crimp Contacts
A - Y Extended PCB Tail Contacts (Consult TE)

CeeLok FAS-X Connector Modules

Adapters

Tinel-Lock backshell adapters are available to provide reliable braided shield termination using Tinel-Lock rings and accommodate a lipped heat-shrink boot.

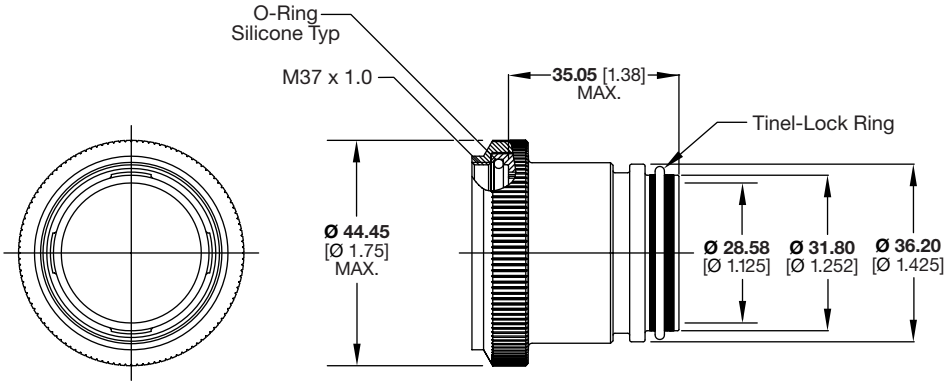

Part No.

TXS201 A X 00-24 BI

TXS201 A X 00-24 AI

Aluminum alloy body with nickel PTFE plating

BI = Tinel-Lock ring for dual-layer 36 AWG or single layer 30 AWG braid shields

AI = Tinel-Lock ring for single layer 26 AWG braid shields

Consult your TE representative for other plating and shield termination options.

CeeLok FAS-X Connector Modules

Size 22D Contacts

28 – 22 AWG wire
.160 to .190
recommended
strip length

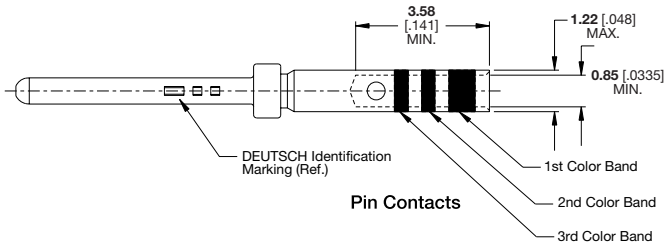

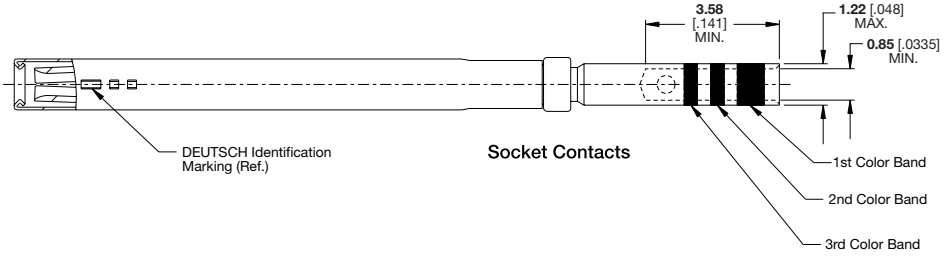

Type	Military Part No.	TE DEUTSCH Part No.*	Color Bands			Crimp Tool	
			1st	2nd	3rd	Basic Tool	Positioner
Pin	M39029/107-620	12331-22	Blue	Red	Black	M22520/2-01	M22520/2-09
	M39029/58-360	38941-22, 38941-22L	Blue	Brown	Yellow	M22520/7-01	M22520/7-07
Socket	M39029/106-614	12333-22	Orange	Blue	Black	M22520/2-01	M22520/2-07
	M39029/56-348	38943-22, 38943-22L	Orange	Yellow	Gray	M22520/7-01	M22520/7-05

*12331-22 and 12333-22 are high-durability contacts rated for 1500 mating cycles.
38941-22x and 38943-22x are standard durability contacts rated for 500 mating cycles.
The L suffix indicates localized plating; otherwise plating is standard.

HIGH PERFORMANCE

- Wide temperature range: -40°C to +120°C
- Shock, vibration, and impact resistant
- Sealed to IP68 standards

RUGGED

- Fully enclosing aluminum, marine bronze and stainless steel shells
- MIL-DTL-38999 series III-style polarized shells
- Positive cordset retention >100 N axial force

SECURE

- One turn self-locking coupling
- UL 94 V0 low smoke
- RoHS compliant

POLAMCO USB Connector Systems

USB 2.0 and 3.0 38999 Series III-Style Connectors for Harsh Environments

The POLAMCO high-speed USB connector system incorporates a MIL-DTL-38999 Series III-style metal shell with full 360° shielding and mechanical protection.

These USB connector systems have been designed to help meet the requirements of high-speed data connections where reliability through environmental sealing and full mechanical protection are required.

Each USB connector is designed to help handle high levels of shock, vibration and mechanical impact, and is sealed to IP68 standards to help resist fluids and dust for long-term reliable performance.

Three styles using 38999 shells are available:

USB 2.0 Type A

USB 2.0 Type B

USB 3.0 Type A

The USB 2.0 connectors achieve data rates to 480 Mb/s, while USB 3.0 connectors are capable of 5 Gb/s data rates.

Specifications

SHELL MATERIALS

- **Shell:** Aluminum, marine bronze, stainless steel
- **Finishes:**
  (Over aluminum with electroless nickel underplating, unless noted):
  Electroless nickel
  Olive drab cadmium
  Olive drab zinc cobalt
  Black zinc cobalt
  Passivated black zinc nickel
  Passivated (Stainless steel shell)
  Unplated (Nickel aluminum bronze shell)
- **Seal:** Silicone elastomer, fluorosilicone
- **O-Ring:** Silicone
- **Insulator:** Polyphenylene sulfide, UL 94, black
- **Potting:** Clear silicone encapsulant

USB MATERIALS

- **Contacts:**
  USB 2.0: Nickel, selectively gold plated at 30µ
  USB 3.0: Nickel, selectively gold plated at 0.76µm
- **Shielding:** Nickel-plated brass
- **Body:** Polyamide, UL 94V-0
- **PCB:** FR4, UL 94V-0 (PCB termination only)

DATA TRANSMISSION

- **USB-A 2.0:** 480 Mb/s
- **USB-B:** 60 Mb/s
- **USB 3.0:** Up to 5 Gb/s

ELECTRICAL

- **Voltage:** 30 VAC
- **Current Rating:** 1 A max. per contact
  (1.8 A max. USB 3.0 pins 1 and 4)

ENVIRONMENTAL/MECHANICAL

- **Temperature Ranges:** -40°C to +120°C
- **Fluid Resistance:** IP68 (mated)
- **Cable Retention:** >100 N (22.4 lbs.) axial force
- **Durability:**
  USB 2.0: >500 mating cycles
  USB 3.0: 5000 mating cycles

USB Connector Options

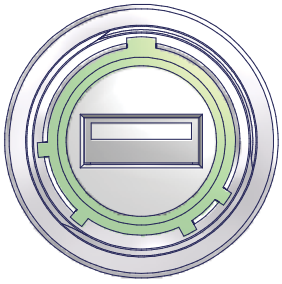

USB-A 2.0

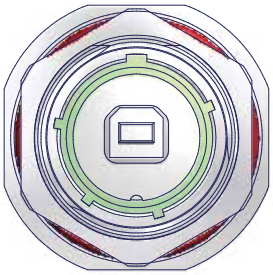

USB-B

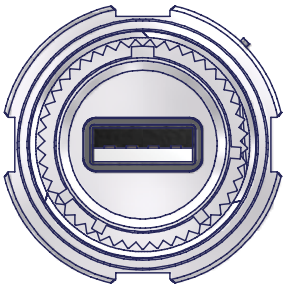

USB 3.0

Connector Orientation Options

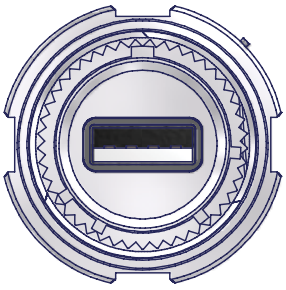

X
(Standard)

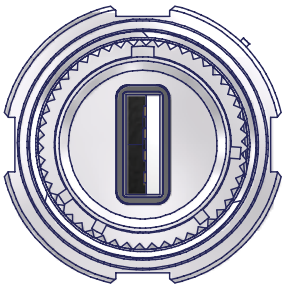

Y

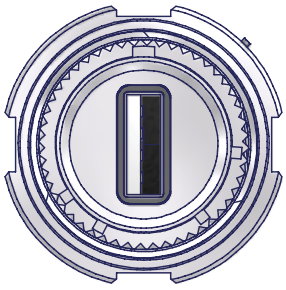

Z

POLAMCO USB Connector Systems

POLAMCO USB-A 2.0 38999-Style Connectors
Plug

Series
PC4D0021: Size 15 Memory Plug Assembly (Standard)
PC4D0048: Size 15 Memory Plug, Isolated
PC4D0059: Size 15 Memory Plug, Kit
PC4D0021: Size 15 Memory Plug, Anti-Tamper

Receptacle

Series
PC4B0054: In-Line Receptacle, Solder (Standard)
PC4B0089: In-Line Feedthrough Receptacle

Jam Nut, Bulkhead-Mount Feedthrough

Series
PC4F0027: Sealed Feedthrough (Standard)
PC4F0049: Sealed Feedthrough (Standard)

Jam Nut Feedthrough Receptacle

Series
PC4F0009: Size 15 Feedthrough
PC4F0043: Size 15 Feedthrough, Solder
PC4F0030: Size 15 Feedthrough with Stand-Offs
PC4F0059: Size 15 Feedthrough, Sealed
PC4F0016: Size 15 Feedthrough (Standard)
PC4F0031: Size 17 Assembly
PC4F0032: Size 17 Assembly, Solder

Square Flange Bulkhead-Mount Feedthrough

Series
PC4B0064: Size 15 Feedthrough Assembly

HIGH PERFORMANCE

- Shock, vibration and impact resistant
- Internal grounding fingers for excellent continuity
- Wide temperature range: -40°C to +120°C

CONVENIENT

- No assembly tooling required
- Fast, secure coupling
- RJ45 connectors supplied as kit

RUGGED RELIABILITY

- Rugged 38999 connectors and plugs
- Sealed to IP 68 standards
- Fully grounded from shielded RJ45 plug to 38999 shell

VERSATILE

- Keyway and insert orientations enable 24 total configurations
- Wide range of accessories available
- Fully field repairable

POLAMCO RJ45 Series Connectors

POLAMCO Cat 5 and Cat 6a 38999-Style Connectors for Harsh Environments

The POLAMCO high-speed RJ45 connector system incorporates a MIL-DTL-38999 Series III-style metal shell with full 360-degree shielding and mechanical protection.

These connectors have been designed to help meet the requirements of high-speed data connections where reliability through environmental sealing and full mechanical protection are required.

Tested by TE to 10 Gb/s data rates, the connector shells are available in your choice of aluminum, nickel aluminum bronze, and stainless steel for rugged, reliable performance.

The connectors are fully grounded from the shielded RJ45 plug to the 38999-style connectors. Each is designed to help handle high levels of shock, vibration and mechanical impact, and sealed to IP68 standards to help resist fluids and dust for long-term reliable performance.

Specifications

SHELL MATERIALS

- **Shell:** Aluminum, nickel aluminum bronze, stainless steel
- **Finishes:**
  (Over aluminum with electroless nickel underplating, unless noted):
  Electroless nickel
  Olive drab cadmium
  Olive drab zinc cobalt
  Black zinc cobalt
  Passivated black zinc nickel
  Passivated (Stainless steel shell)
  Unplated (Nickel aluminum bronze shell)
- **Seal:** Silicone elastomer, fluorosilicone
- **O-Ring:** Silicone elastomer
- **Insulator:** Polyphenylene sulfide, UL 94, black
- **Potting:** Clear silicone encapsulant and polyetherimide resin

RJ-45 MATERIALS

- **Contacts:** Copper, selectively gold plated
- **Shielding:** Nickel-plated brass
- **Body:** Polyamide, UL 94V-0
- **PCB:** FR4, UL 94V-0 (PCB termination only)

ELECTRICAL

- **Voltage:** 50 VDC/35 VAC
- **Current Rating:** 2.1 A at 70°C
- **Category Rating:** Cat 5 or Cat 6a

ENVIRONMENTAL/MECHANICAL

- **Temperature Range:** -40°C to +120°C
- **Fluid Resistance:** Sealed to IP68 for fluid and dust resistance
- **Cable Retention:** >100 N (22.4 lbs.) axial force

RJ-45 Orientation Options

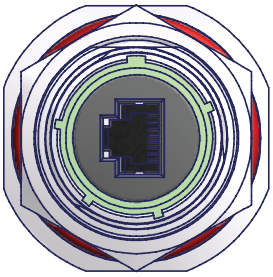

W

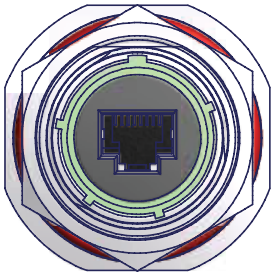

X
(Standard)

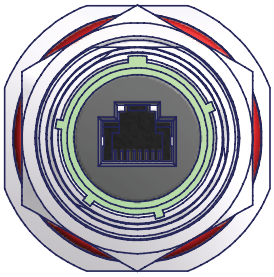

Y

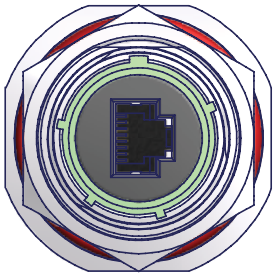

Z

POLAMCO RJ45 38999-Style Connectors

Plug

Series
PC4D0024: Cat 6a
PC4D0042: Cat 6a, Field Installable
PC4D0002: Cat 5

Jam Nut Receptacle

Series
PC4F0020: Cat 6a, Feedthrough (Standard)
PC4F0023: Cat 6a, 90° Feedthrough
PC4F0084: Cat 6a, Sealed Feedthrough
PC4F0034: Cat 6a, Solder
PC4F0025: Cat 6a, PCB Mount
PC4F0002: Cat 5 Feedthrough (Standard)

Square Flange Receptacle

Series
PC4B0029: Cat 6a Feedthrough
PC4B0102: Cat 6a Sealed Feedthrough
PC4B0038: Cat 6a 90° Feedthrough
PC4B0076: Cat 6a PCB Mount
PC4B0002: Cat 5 Feedthrough (Standard)

Bulkhead-Mount Feedthrough

Series
PC4B0103: Cat 6a Square Flange
PC4F0085: Cat 6a, Jam Nut
PC4B0002: Cat 5e Square Flange
PC4F0002: Cat 5 Jam Nut

Cable assemblies are also available in a variety of configurations. Consult TE.

POLAMCO RJ45 38999-Style Connectors

Typical Part Numbering System
(Not all options are available with every series. Additional options available. Consult TE)

PC40084 H 19 N X 1 C BT

SERIES

SEALING OPTION (Unmated)
Omit For No Special Sealing
S Pressure Tested to 1 Bar
H Hermetic (<1.0 x 10^{-6} Std. cc/s He)

SHELL SIZE
19

KEY ARRANGEMENT
N, A, B, C, D, E

INSERT ROTATION
W, X, Y, Z

MATERIAL
1 Aluminum
2 Nickel Aluminum Bronze
4 Stainless Steel

FINISH
ALUMINUM SHELL
C Electroless Nickel
B Oliver Drab Cadmium
ZB Olive Drab Zinc Cobalt
ZK Black Zinc Cobalt
ZN Passivated Black Zinc Nickel
STAINLESS STEEL SHELL
J Passivated
NICKEL ALUMINUM BRONZE SHELL
Z Unplated

BACKSHELL OPTION (Optional)
005 Cable Seal
BT Boot

WIDE RANGE

- Physical contact (PC) and expanded beam (EB) interface styles
- Suitable for use across multiple applications and markets, including as military ground, military and commercial aerospace, C5ISR and marine

EASE OF USE

- Rear-removable optical termini
- Removable front inserts for ease of access to optical termini — helping to support simple, effective cleaning and maintenance of termini
- Lens protected EB inserts and termini help protect the fiber core behind the lens and help optimize the performance of the optical link

PRECISION CONNECTIONS

- Dowel pin alignment
- Standard and tight-tolerance keying

RUGGEDNESS

- Environmental sealing
- Anti-vibration coupling mechanisms

Fiber Optic Connectors

PC Connector

EB Connector

38999 Series III Style

As a trusted leader in optical technology with over 40 years of experience in supplying optical solutions for harsh environments, TE offers high-performance 38999-style connector solutions that are also easy to maintain in the field. Our products are designed to operate reliably in harsh and challenging environments, and the company's technical specialists have an in-depth understanding of application requirements.

- **MC801 Connectors:** Industry-standard 1.25-mm ARINC 801 termini
  Up to 32 fibers
- **MC3 Mk II Connectors:** DEUTSCH 2.5-mm termini
  5, 8, 12 fibers
- **MC4 Connectors:** DEUTSCH 2.5-mm termini
  2 fibers in a size 9 shell
- **MC5 Connectors:** DEUTSCH 1.25-mm termini
  1, 2, 4, 6, 8, 10, 18, 24, 30 fibers
- **MC6 Connectors:** Single MT ferrule in size 11 shell
  2, 4, 8, 12, 24, 48 channels
- **AviMT Connectors:** Four MT ferrules in size 21 shell
  Up to 96 fibers
- **Qualified Connectors:** MIL-T- 29504/4 and /5 termini
  Fit standard size 16 cavities
- **PRO BEAM Connectors:** Use PRO BEAM EB inserts
  1, 2, 4, 8 fibers in size 11 or 15 shell
- **EB16 Termini:** EB termini
  Fit standard size 16 cavities

Physical Contact (PC) Connectors

A PC connection uses optical ferrules that are mated within an alignment sleeve and holder to help ensure minimal optical losses and repeatable alignment. The termini can be incorporated into standard circular and rectangular connector to offer multi-channel solutions. PC connections offer

- Low insertion loss
- Low reflection
- High density

While most PC connectors use a ceramic ferrule for a single fiber, the MT ferrule is a multifiber variation typically holding 12 or 24 fibers.

PC solutions offer a higher optical density (Number of channels) and can be used in conjunction with EB interconnects to minimize system losses.

The majority of termini solutions available from TE are spring loaded to help prevent optical discontinuities under shock and vibration.

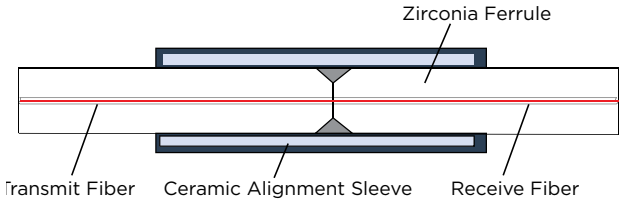

Expanded Beam (EB) Connectors

EB connectors expand and re-focus light at the fiber end faces and allow an air gap in the optical pathway. The EB concept uses optical lenses (typically a 3-mm ball lens for dedicated inserts or 1.25-mm lens for EB16 termini) to expand and collimate the beam emitted from the launch fiber.

The expanded beam remains collimated across the mechanical interface until the receiving lens focuses the beam onto the receiving fiber.

Standard channel counts for EB-specific connectors are 1, 2, 4 and 8. Since these connectors are used in rugged and tactical environments, they are usually terminated on robust ruggedized, metal-tubed, and avionics/flight-grade cable.

The EB16 optical termini employs the same technology from the well-established dedicated inserts into a termini that can be used in 38999 Series III size 16 cavities to allow for flexibility and higher fiber counts.

The absence of physical fiber contact makes EB connectors very useful in demanding environments. They offer:

- Sealed optical interface
- High vibration and shock resistance
- High mating-cycle durability
- Tolerance to dirt and debris
- Easy cleaning

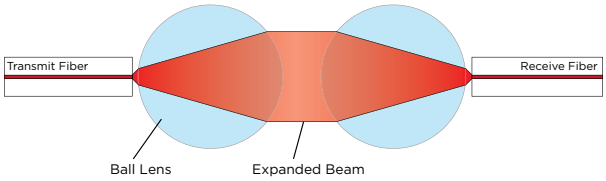

Comparison of PC and EB Connector Technologies

Performance Criteria	PC	EB
Insertion Loss	★★★★	★★
Return Loss (SM)	★★★★	★★
Return Loss (SM)—Unmated	★	★★
Lateral Connector Misalignment	★	★★★★
Connector Angular Tilt	★★★★	★
Mating Durability	★★★	★★★★
Water Exposure	★★★	★★

Performance Criteria	PC	EB
Dust Exposure	★★★★	★★★
Vibration Susceptibility	★★	★★★
Repair	★★	★★
Cleanability	★★	★★★
Wear	★	★★★
Wavelength Range	★★★★	★★

RELIABLE

- Genderless pull-proof contact design
- Precise alignment of optical interface
- Spring-loaded termini maintain optical contact during shock, vibration, and thermal extremes

EASY TO USE

- Removable alignment insert for easy inspection and cleaning
- Field terminable
- Uses standard size 16 insertion/extraction tools

HIGH PERFORMANCE

- Low loss
- PC and APC end face finishes for multimode and single mode applications
- Helps reduces overall system losses

FLEXIBLE

- Eight shell sizes for 2 to 32 fibers
- Range of shell materials and finishes to help meet various application demands

PROVEN PEDIGREE

- Widely used termini in aerospace and military applications
- Meets ARINC 801.3 requirements
- MIL-DTL-38999 Series III-style shells
- Use widely available 38999 backshells and accessories

COMPATIBLE

- Fully intermateable with other qualified ARINC 801/38999 connectors

MC801 Connectors

38999 Series III-Style Fiber Optic Connectors

The MC801 connector combines the high performance of ARINC 801 optical termini with the convenience of a familiar D38999 Series III connector style.

The connector's threaded coupling and the termini's spring-loaded design make an excellent solution for high-vibration applications. The compact 1.25-mm ferrule provides a high-density solution—with up to 32 fibers in a size 25 shell. The 38999-style connector offers scoop-proof mating, a wide selection of materials and finishes, six keying options, and compatibility with standard 38999 backshells and hardware.

Optical alignment is achieved with a thermoplastic insert containing precision zirconia alignment sleeves. Inserts, which are available for use with either the plug or receptacle, are removable to simplify cleaning. Stainless steel dowel pins also aid alignment during mating.

MC801 Connectors

38999 Series III-Style Fiber Optic Connectors

Specifications

MATERIALS

- **Shell:** Aluminum, stainless steel, marine bronze, and composite
- **Finishes:** Nickel, black zinc nickel, passivated, olive drab cadmium
- **Insert and Alignment Sleeve Holder:** Thermoplastic
- **Alignment Dowel Pins:** Stainless steel
- **Alignment Sleeve:** Zirconia
- **Ferrule:** Zirconia
- **Terminus Body and Crimp Sleeve:** Nickel-plated copper
- **Spring:** Stainless steel

OPTICAL PERFORMANCE

- **Insertion Loss:** 0.10 dB multimode
  0.20 dB single mode (APC finish)
- **Return Loss:** Up to -65 dB (single mode, APC finish)
- **Insertion loss tested against a reference patchcord:** IEC 61300-3-4 Method B; also described in ARINC 805 Return Loss: IEC 61300-3-6; also described in ARINC 805

ENVIRONMENTAL/MECHANICAL PERFORMANCE

- **Temperature Range:** -65°C to +85°C
- **Durability:** 100 mating cycles
- **Random Vibration:** No discontinuities >1 dB in excess of 1 µs (TIA/EIA-455-32 Test Condition B)
- **Mechanical Shock:** No discontinuities >1 dB in excess of 1 µs (100 g, 6 ms half-sine pulse)
- **Altitude Immersion:** 50,000 ft. (15,200 m)

SPECIFICATIONS

- **Product Specification:** D108-32105
- **Qualification Test Reports:** D501-32031 (Multimode)
  D501-32105 (Single Mode)

MC801 Connectors

38999 Series III-Style Fiber Optic Connectors

Jam Nut Receptacle Connector

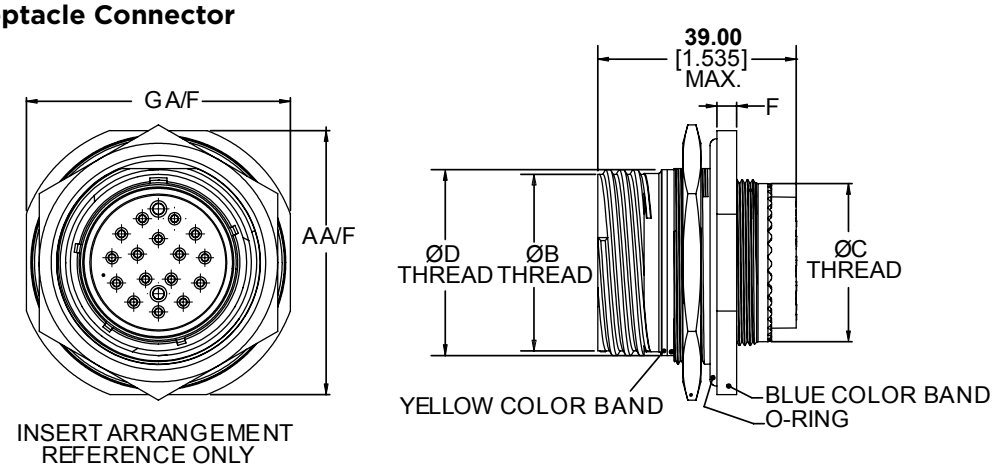

Insert	ØA	B Thread Stub 60° Mod 1P-3L Class 2A (in)	ØC	ØD	ØE	F	G
11-02	**31.80** 1.252	0.7500	M15 x 1.0	M20 x 1.0	**34.90** 1.374	**2.84** 0.112	**26.75** 1.053
13-04	**34.90** 1.374	0.8750	M18 x 1.0	M25 x 1.0	**38.10** 1.500		**31.75** 1.250
15-06	**38.10** 1.500	1.0000	M22 x 1.0	M28 x 1.0	**41.30** 1.626		**35.74** 1.407
17-08	**41.30** 1.626	1.1875	M25 x 1.0	M32 x 1.0	**44.50** 1.752		**36.75** 1.447
19-12	**46.00** 1.811	1.2500	M28 x 1.0	M35 x 1.0	**49.20** 1.937	**3.61** 0.143	**40.74** 1.604
21-16	**49.20** 1.937	1.3750	M31 x 1.0	M38 x 1.0	**52.40** 2.063		**45.75** 1.801
23-24	**52.40** 2.063	1.5000	M34 x 1.0	M41 x 1.0	**55.60** 2.189		**49.76** 1.959
25-32	**55.60** 2.189	1.6250	M37 x 1.0	M44 x 1.0	**58.70** 2.311		**50.98** 2.007

Millimeters Inches

Insert Arrangements

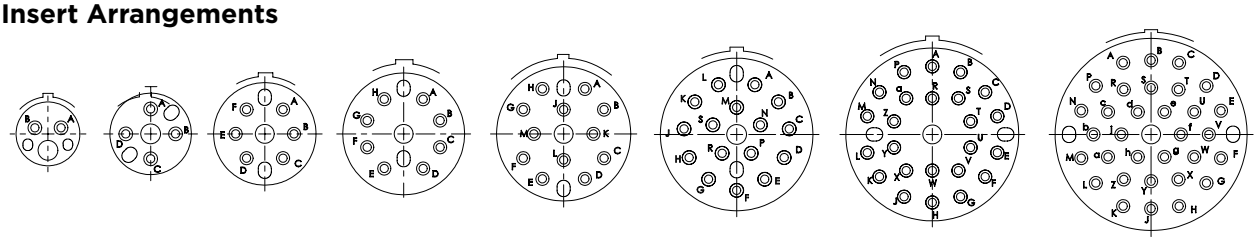

11-02 **13-04** **15-06** **17-08** **19-12** **21-16** **23-24** **25-32**

MC801 Connectors

38999 Series III-Style Fiber Optic Connectors

Part Number/Ordering Information

MC801 6 — K — 11-02 S N

PRODUCT FAMILY
MC801

SHELL STYLE
- **0** Square Flange Receptacle
- **6** Plug
- **7** Jam Nut Receptacle

SHELL MATERIAL AND FINISH
- **B** Aluminum Bronze, Unplated
- **C** Composite, Cadmium Plated
- **D** Composite, Zinc Nickel Plated
- **F** Aluminum, Nickel Plated
- **K** Stainless Steel, Passivated
- **N** Composite, Nickel Plated
- **W** Aluminum, Cadmium Plated
- **Z** Aluminum, Zinc Nickel Plated

INSERT (SHELL SIZE—NUMBER OF FIBERS)
11-02, 13-04, 15-06, 17-08, 19-12, 21-16, 23-24, 25-32

ALIGNMENT STYLE
- **P** "Pin"—No Alignment Insert
- **S** "Socket"—With Removable Alignment Insert

KEYING
- **N** Normal
- **A, B, C, D, E**

ARINC 801 Termini

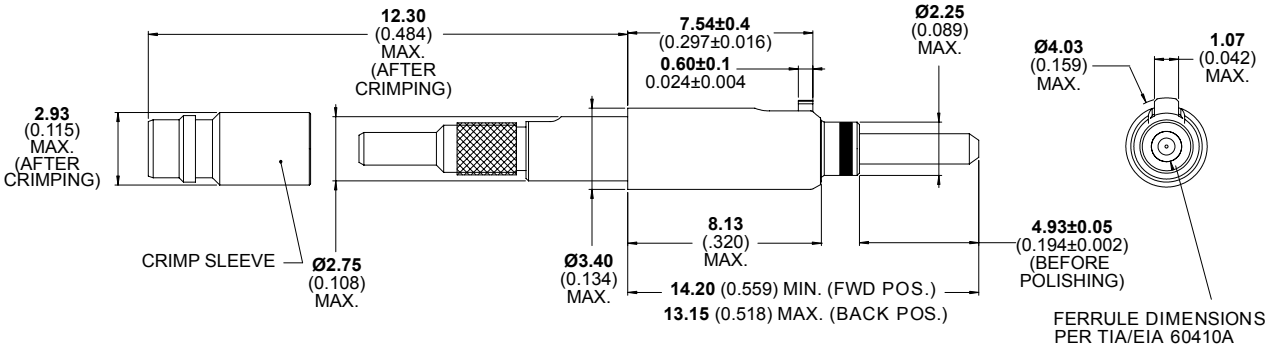

Fiber Type	Part No.			
	Tight Jacket		Loose Jacket	
	1.8 mm Cable	900µm Buffer Cable	1.8 mm Cable	900 µm Buffer Cable
Single Mode	459266-126S-02-1	459266-126S-00-1	459265-126S-02-1	459265-126S-00-1
Single Mode, APC	459266-125A-02-1	459266-125A-00-1	459265-125A-02-1	459265-125A-00-1
Single Mode	459266-126M-02-1	459266-126M-00-1	459265-126M-02-1	459265-126M-00-1

Note: Customer drawings, models, additional product information, and instruction sheets are available at te.com.

EASY TO USE

- Color band indicates full mating
- Insert-to-insert keying assists precision alignment
- Individual rear insertable/ removable optical contacts enable easy assembly
- Removable alignment sleeve for easy cleaning
- Simple termination and tooling

RUGGED RELIABILITY

- Spring loaded optical contacts maintain physical contact under severe shock or vibration conditions
- Precision 2.5 mm zirconia ferrules and alignment
- Excellent repeatable optical performance
- MIL-DTL-38999 Series III anti-vibration coupling mechanism and tri-start thread

VERSATILE

- Backshells and adaptors available for most single and multifiber cable
- Alternative shell keyway orientations prevent mismating
- Dynamic O-ring seal between mating shells for water submersion capability

DEUTSCH MC3 MkII Fiber Optic Connectors

MIL-DTL-38999 Series III Style Connectors

The DEUTSCH MC3 MkII Series ruggedized connectors incorporate individual rear-insertable optical contacts. The removable socket insert helps support easy access to the optical faces to help simplify cleaning and maintenance.

The MC3 MkII Series uses a removable alignment insert for easy cleaning (can be specified in both plug and receptacle shells), and is suitable for use with most single mode and multimode optical fibers with core diameters from 5 to 200 µm. 5, 8, 12 optical channels are accommodated in the MIL-DTL-38999 Series III-style connector shells.

Featuring spring-loaded optical contacts, tri-start threads and anti-vibration couplings, MC3 MkII connectors are a rugged choice for use in many severe environments and tough application conditions.

DEUTSCH MC3 MkII Fiber Optic Connectors

MIL-DTL-38999 Series III Style Connectors

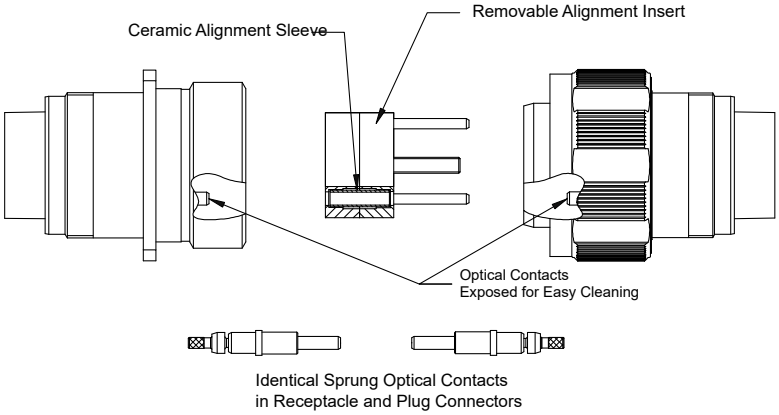

Specifications

FIBER TYPE

- **Channels:** 5, 8 and 12 optical channels
- **Cable Size:** 1.5 mm to 3.0 mm, outer jacket

MATERIALS

- **Shell:** Aluminum, stainless steel, marine bronze
- **Finishes:** Nickel, olive drab cadmium, or black zinc nickel (aluminum shell)
- **Contact Body:** Arcap, Titanium
- **Ferrule:** Zirconia
- **Alignment Sleeve:** Zirconia
- **Alignment Pin:**
- **Seals:** Fluorosilicone or nitrile

OPTICAL PERFORMANCE

- **Insertion Loss:** 0.25 dB typical*
- **Return Loss:** 40 dB typical*
- **Repeatability:** 0.1 dB with 50/125-µm fiber

*Fiber and polishing process dependent.

ENVIRONMENTAL

- **Temperature Range:** -65°C to +155°C
- **Fluid Resistance:** Fluid immersion per EIA 364.10, including resistance to
  MIL-PRF-5606: Hydraulic fluid
  MIL-DTL-83133: JP-8 aviation fuel
  MIL-PRF-7808: Lubricating oil
  MIL-PRF-23699: Lubricating oil
  MIL-A-8243: Deicing/defrosting fluid
  MIL-C-25769: Aircraft cleaning compound
  MIL-PRF-87937: Aircraft cleaning compound
  MIL-G-3056: Gasoline
- **Salt Spray:** 48 hours (Nickel finish)
  500 hours (Cadmium finish)
- **Thermal Cycling:** -65° to 150°C

DEUTSCH MC3 MkII Fiber Optic Connectors

MIL-DTL-38999 Series III Style Connectors

MECHANICAL

- **Sine Vibration:** 5 to 3000 Hz, 30 g
- **Bump:** 4000 bumps, 40 g
- **Random Vibration:** Up to 41.7 g for 16 hr. at 175° C
  Up to 50 g for 16 hr. at ambient temperature
- **Shock:** 300 g, 3 ms in the 3 axes
- **Durability:** 500 mating cycles
- **Thermal Shock:** 10 cycles, 4°C max. to 90°C min.

Square Flange Receptacle

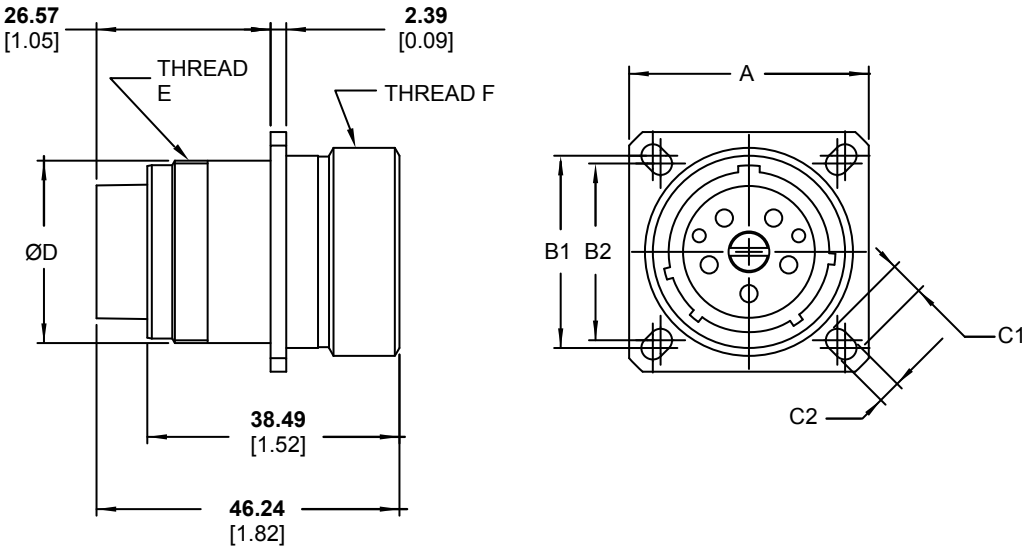

Size/ Arrangement	A	B1	B2	C1	C2	D	Thread E	Thread F
19-5	**36.58** 1.440	**29.35** 1.156	**26.98** 1.062	**5.00** 0.197	**3.50** 0.138	**27.84** 1.096	M28 x 1.0	**31.75** 1.250
23-8	42.98 1.692	**34.92** 1.375	**31.75** 1.250	**6.23** 0.245	**4.00** 0.157	**33.84** 1.332	M34 x 1.0	**38.11** 1.500
25-12	46.02 1.812	**38.11** 1.500	**34.92** 1.375	**6.23** 0.245	**4.00** 0.157	**36.84** 1.450	M37 x 1.0	**41.28** 1.625

Millimeters Inches

Plug

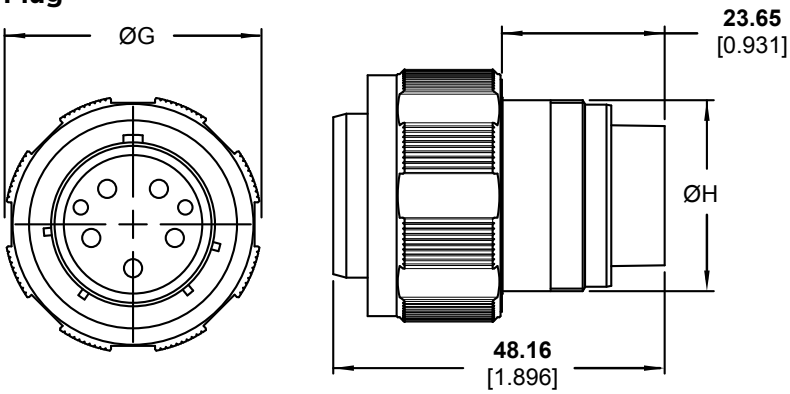

Size/ Arrangement	ØG
19-5	**37.92** 1.493
23-8	**44.12** 1.737
25-12	**47.35** 1.864

Millimeters Inches

DEUTSCH MC3 MkII Fiber Optic Connectors

MIL-DTL-38999 Series III Style Connectors

Dummy Receptacle

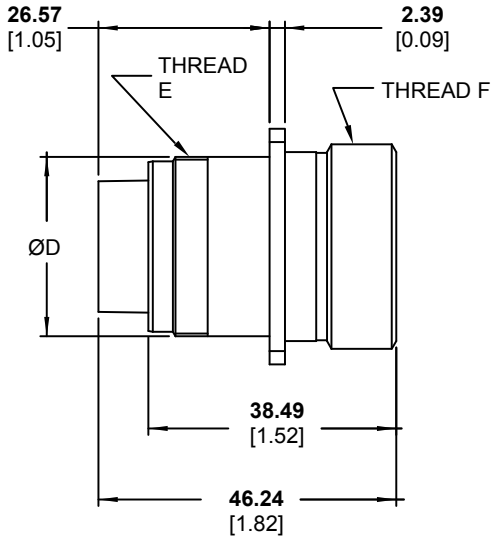

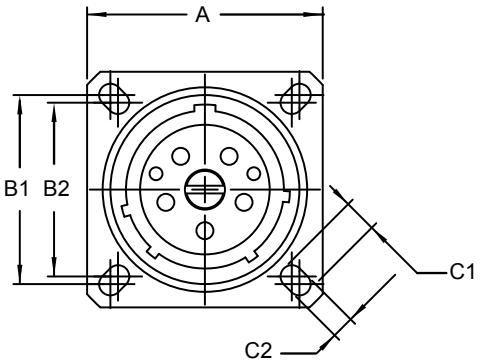

Size/ Arrangement	A	B1	B2	C1	C2
19-5	**36.58** 1.440	**29.35** 1.156	**26.98** 1.062	**5.00** 0.197	**3.50** 0.138
23-8	**42.98** 1.692	**34.92** 1.375	**31.75** 1.250	**6.23** 0.245	**4.00** 0.157
25-12	**46.02** 1.812	**38.11** 1.500	**34.92** 1.375	**6.23** 0.245	**4.00** 0.157

Millimeters Inches

Procaps

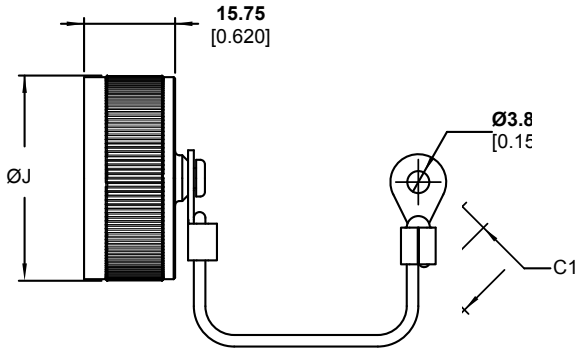

Plug Cap

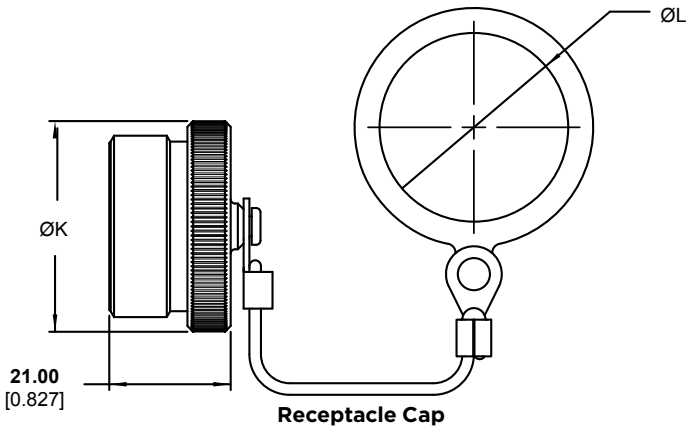

Receptacle Cap

Size/ Arrangement	ØH	ØJ	ØK	ØL
19-5	**27.7** 1.091	**35.4** 1.394	**36.92** 1.454	**29.46** 1.160
23-8	**33.7** 1.327	**41.75** 1.664	**43.12** 1.698	**35.81** 1.410
25-12	**36.7** 1.445	**44.93** 1.769	**46.35** 1.825	**38.99** 1.535

Millimeters Inches

DEUTSCH MC3 MkII Fiber Optic Connectors

MIL-DTL-38999 Series III Style Connectors

Ordering Information

MC3 00 E 2-N - 19-5 S N - F***

PRODUCT FAMILY

STYLE
- **00** Bulkhead Receptacle
- **06** Plug
- **07** Jam Nut Receptacle
- **20** Protective Cap, Plug
- **30** Dummy Receptacle
- **40** Protective Cap, Receptacle

SHELL FINISH
- **N** Nickel Plated
- **C** Cadmium Plated Olive Drab

INSERT (SHELL SIZE, NUMBER OF FIBERS)
- **19-5, 23-8, 25-12**

INSERT TYPE
- **P** "Pin"—No Alignment Insert
- **S** "Socket"—With Removable Alignment Insert

SHELL POLARIZATION
- **N** Normal
- **B, C, E, F**
- **U** Universal

MODIFICATION CODE

DEUTSCH MC3 MkII Fiber Optic Connectors

MIL-DTL-38999 Series III Style Connectors

Optical Termini (ordered separately)

Optical termini are supplied with a profile-formed optical end face and are available for single-mode or multimode fibers. Contacts are available in either sprung or rigid versions, depending upon application (rigid contacts should be used in bulkhead receptacles only).

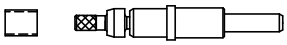

Spring-Loaded Type
455500

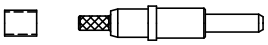

Rigid Type
455494
(Optional for bulkhead receptacles only)

Ordering Information

455500 - 128 - 1-01

TYPE

455500 Spring-Loaded Termini
455595 Rigid Termini (Bulkhead Receptacles Only)

FIBER HOLE SIZE

126
127
128
145
162
176
232
283
1MM Plastic optical fiber

CABLE TYPE

Tight Buffered
1-00 900 tight buffered

Tight Jacketed
1-01 2.5 mm OD
1-02 1.8 mm OD
1-03 3.0 mm OD
1-04 2.1 mm OD
00 2.2 mm OD (1MM Fiber Size Only)

Crimp Sleeves and Crimp Dies

Cable OD	Sleeve Part No.	Crimp Dies Part No.	A/F
900 µm Tight Buffer	—	455608	**1.64/1.74** 0.065/0.069
2.5	455610-01	455608	**3.10/3.12** 0.122 / 0.123
1.8	455610-02	455608	**3.10/3.12** 0.122/0.123
2.0	455610-03	455608	**3.56/3.48** 0.140/0.137
2.1	455610-04	455608	**3.10/3.12** 0.122/0.123

Millimeters Inches

SPACE SAVING

- Two optical channels in a size 9 shell

HIGH PERFORMANCE

- Compact 2.5-mm precision zirconia ceramic ferrules
- Lightweight aluminum shells
- MIL-DTL-38999 Series III anti-vibration coupling mechanism and tri-start thread

EASY TO USE

- Simple termination process and tooling
- Purpose designed inserts, and insert-to-insert keying aid precision alignment
- Identical spring loaded optical contacts help maintain contact under severe shock and vibration

DEUTSCH MC4 Duplex Connectors

MIL-DTL-38999 Style Series III Connectors

The MC4 Duplex optical fiber connector is based upon shell size 9 Mil-C-38999 Series III making this an extremely compact environmentally sealed 2-way connector. The MC4 is suitable for use with most multimode fibers with core diameters of 50 to 200 µm. Simplex and duplex cable constructions can be accommodated with suitable connector backshells.

Precision ceramic ferrules and alignment sleeves help support optimum performance and reliability over the service life of the connector.

The optical termini are spring loaded in both the plug and receptacle shells. This helps provide an axial load equalization so that the contact can be maintained even when the connector is subjected to vibration levels in excess of 30 g.

The coupling nut has a built in antivibration clicker mechanism to help prevent inadvertent uncoupling under adverse vibration conditions.

DEUTSCH MC4 Duplex Connectors

MIL-DTL-38999 Style Series III Connectors

Specifications

OPTICAL

- **Attenuation:** Less than 0.4 dB (50/125 µm)
- **Repeatability:** Better than 0.2 dB
- **Fiber Types:** x/125, 100/140, 200/280 µm
- **Cable Types:**
  2.5 mm tight jacketed
  4.5 mm duplex
  For other cable sizes consult TE

MATERIALS

- **Shell:** Aluminum alloy, nickel plated
- **Ferrule:** Zirconia
- **Alignment Sleeve:** Zirconia
- **Seals:** Fluorosilicone
- **Backshell:** Aluminum alloy, nickel plated

MECHANICAL

- **Temperature Range:** -65°C to +155°C
  (Cable and epoxy dependent)
- **Durability:** 500 mating cycles

DEUTSCH MC4 Duplex Connectors

MIL-DTL-38999 Style Series III Connectors

Part Numbering System

MC4 00 E - C - 09-2 S N - **

STYLE
- **00** Bulkhead Receptacle
- **06** Plug
- **07** Jam Nut

SHELL FINISH
- **N** Nickel Plated
- **C** Olive Drab Cadmium Plated

SHELL SIZE—NO. OF CHANNELS
- **09-2**

INSERT TYPE
- **P** Pin
- **S** Socket

SHELL ORIENTATION
- **N, A, B, C, D, E**

MODIFICATION CODE

Jam Nut Receptacle

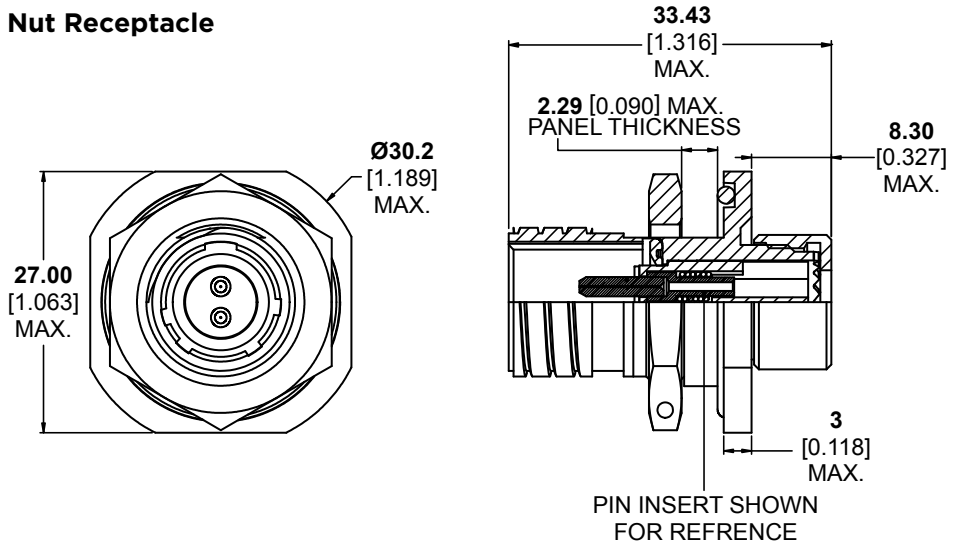

DEUTSCH MC4 Duplex Connectors

MIL-DTL-38999 Style Series III Connectors

Square Flange Receptacle

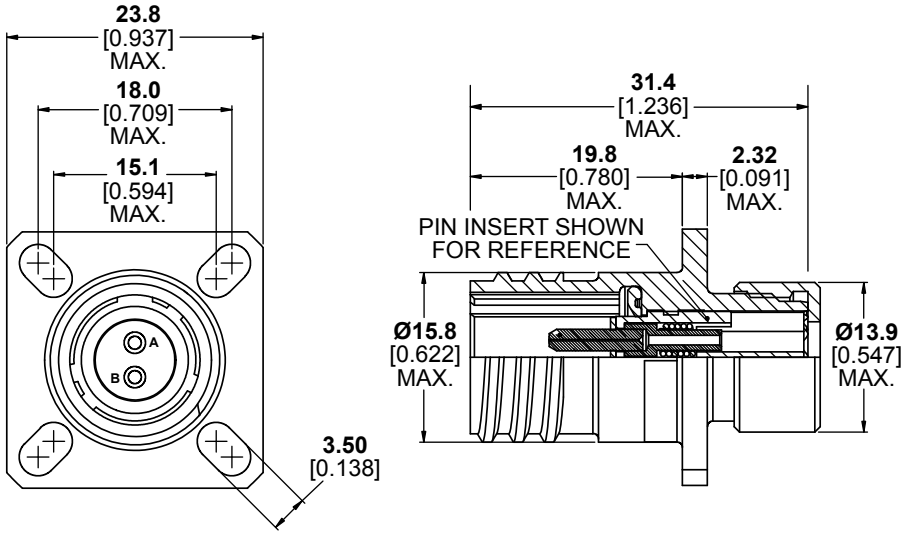

Plug

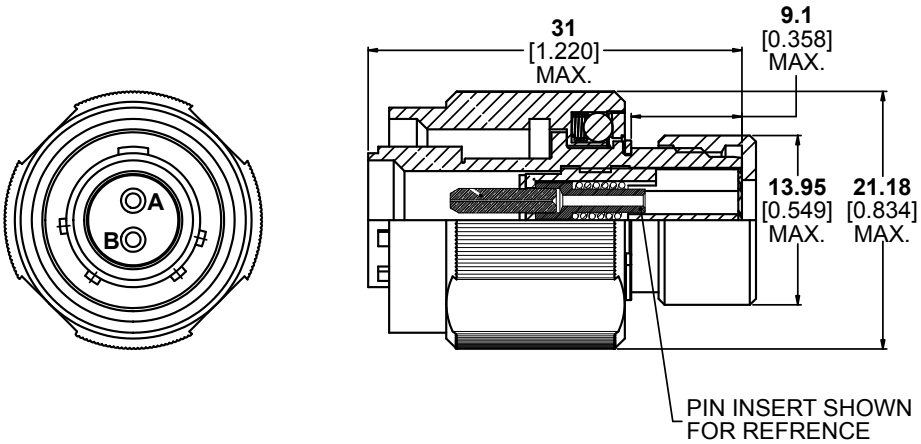

DEUTSCH MC4 Duplex Connectors

MIL-DTL-38999 Style Series III Connectors

Protective Cap for Receptacle Connectors

Part Numbering System

MC420E - N - 09

BASIC PART NUMBER
- **MC440E** Pro Cap for Receptacle Connectors

MATERIAL/FINISH
- **S** Stainless Steel
- **N** Aluminum, Nickel Plated
- **C** Aluminum, Cadmium Plated

SHELL SIZE
- **09**

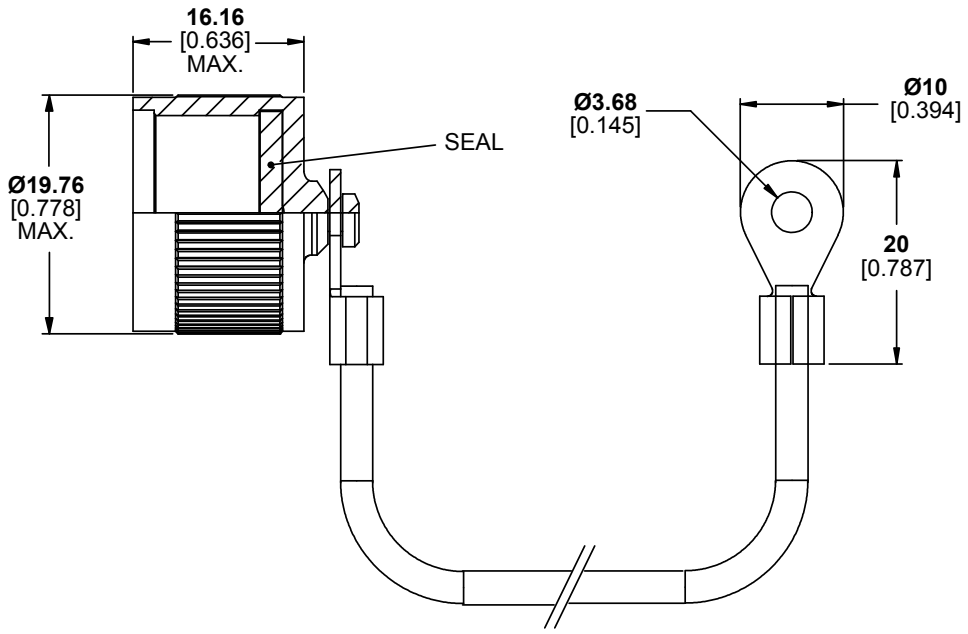

DEUTSCH MC4 Duplex Connectors

MIL-DTL-38999 Style Series III Connectors

Protective Caps for Plug Connectors

Part Numbering System

MC420E - N - 09 - N

BASIC PART NUMBER
MC420E Pro Cap for Plug Connectors

KEYING
N, A, B, C, D, E

SHELL SIZE
09

MATERIAL/FINISH
S Stainless Steel
N Aluminum, Nickel Plated
C Aluminum, Cadmium Plated

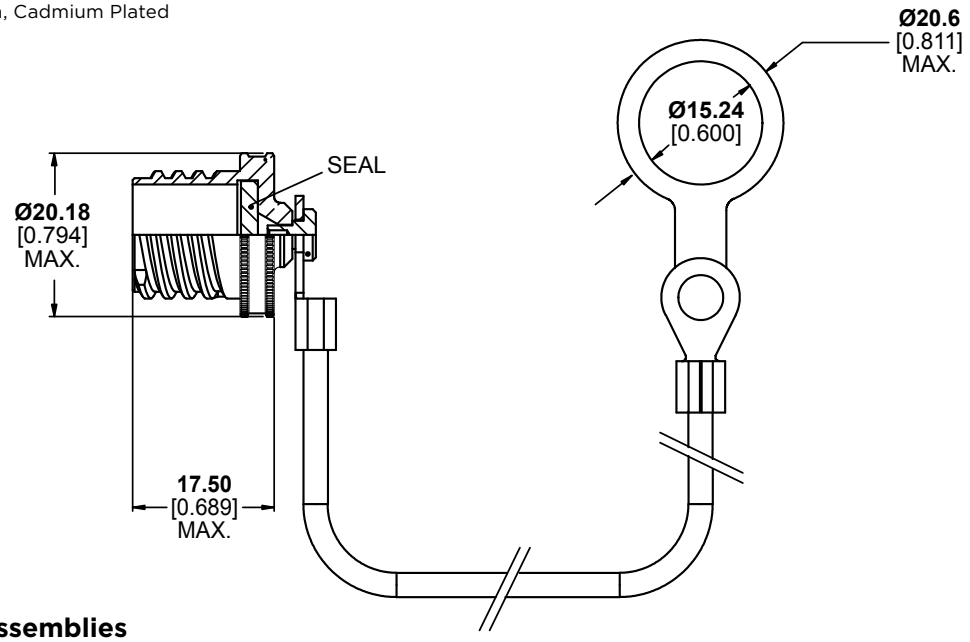

Back End Assemblies

HIGH PERFORMANCE

- Compact 1.25 mm precision zirconia ceramic ferrules
- Composite lightweight, high strength, corrosion resistant connector shells
- MIL-DTL-38999 Series III anti-vibration coupling mechanism and tri-start thread

EASY TO USE

- Simple termination process and tooling
- Purpose designed inserts, and insert-to-insert keying aid precision alignment
- Identical spring loaded optical contacts help maintain contact under severe shock and vibration

VERSATILE

- Extensive range: 1, 2, 4, 6, 8, 10, 18, 24 and 30 way connectors
- Choose from plug socket/ receptacle pin or plug pin/ receptacle socket configurations
- Easily removable alignment sleeve insert facilitates simple cleaning and maintenance

DEUTSCH MC5 Connectors

MIL-DTL-38999 Style Series III Connectors

The DEUTSCH MC5 high-density fiber optic multiway connector series from TE Connectivity (TE) is capable of sustained performance over a wide range of tough environmental conditions.

The MC5 connector uses precision ceramic ferrules and lightweight MIL-DTL-389999 Series III connector shell materials, combined with purpose-designed inserts to help ensure the optical performance meets the requirements of high reliability optical systems.

Compact spring-loaded precision optical contacts are individually insertable/removable for ease of assembly and maintenance, and the color band indicates full mating. The alignment sleeves provide highly reliable, repeatable optical performance.

The MC5 Series connectors provide excellent performance under some of the most demanding environmental conditions, including military aircraft.

DEUTSCH MC5 Connectors

MIL-DTL-38999 Style Series III Connectors

Specifications

FIBER TYPE

- **Channels:** 2, 4, 6, 8, 10, 18, 24, and 30 channels
- **Cable Size:** 1.8 mm, 2.1 mm and 2.5 mm jacket

MATERIALS

- **Shell:** Composite
- **Contact Body:** Arcap
- **Ferrules:** Zirconia
- **Alignment Sleeves:** Zirconia
- **Seals:** Fluorosilicone
- **Plating:** Nickel

OPTICAL PERFORMANCE

- **Insertion Loss:** 0.25 dB typical
- **Return Loss:** -40 dB typical
- **Repeatability:** 0.1 dB (with 50/125 µm fiber)

TEMPERATURE

- **High Temperature Endurance:** +150°C, 760 hours
- **Low Temperature Endurance:** -65°C, 500 hours

MECHANICAL

- **Sine Vibration:** 5-3000 Hz, 40 g, 10 hours
- **Random Vibration:** 25-2000 Hz, 5 g2/Hz (50 Grms), 16 hours

DEUTSCH MC5 Connectors

MIL-DTL-38999 Style Series III Connectors

Ordering Information

MC5 06E - N - 11-2 P N - F***

SERIES
MC5

STYLE
00 Bulkhead Receptacle
06 Plug
07 Jam Nut
20 Protective Cap Plug
30 Dummy Receptacle
40 Protective Receptacle

FINISH
N Nickel Plated

SHELL SIZE
11-2, 13-4, 15-6, 17-8, 19-10, 21-18, 23-24, 25-30

INSERT TYPE
P (without removable alignment insert)
S (with removable alignment insert)

SHELL ORIENTATION
N, A, B, C

MODIFICATION CODE

Plug
MC506E

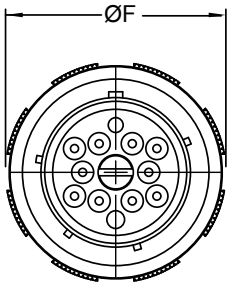

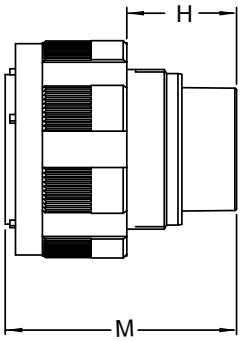

Dimensional Information

Size/ Arrangement	ØF Max.	H Max.	M Max.
11-2	**24.94** 0.982	**19.9** 0.783	**40.86** 1.609
13-4	**29.34** 1.155	**19.9** 0.783	**40.86** 1.609
15-6	**32.46** 1.278	**19.9** 0.783	**40.86** 1.609
17-8	**35.66** 1.404	**19.9** 0.783	**40.86** 1.609
19-10	**38.46** 1.514	**19.7** 0.776	**40.86** 1.609
21-18	**41.66** 1.640	**19.7** 0.776	**40.86** 1.609
23-24	**44.86** 1.766	**19.7** 0.776	**40.86** 1.609
25-30	**47.98** 1.889	**19.7** 0.776	**40.86** 1.609

Millimeters Inches

DEUTSCH MC5 Connectors

MIL-DTL-38999 Style Series III Connectors

Receptacle
MC500E

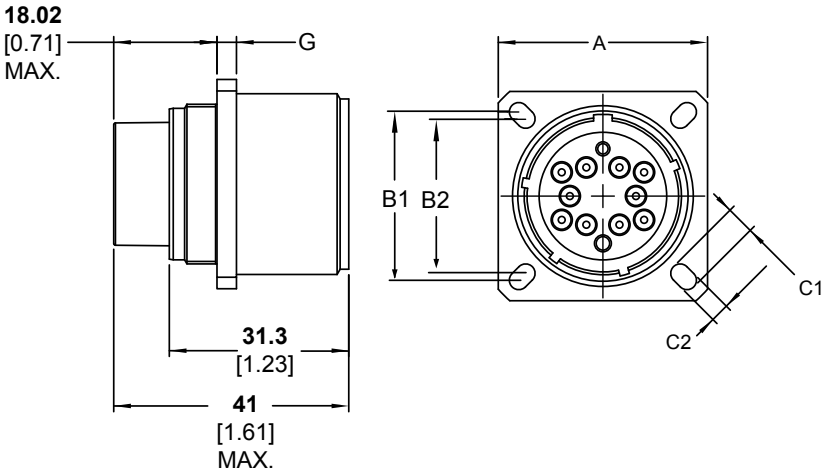

Dummy Receptacle
MC530E

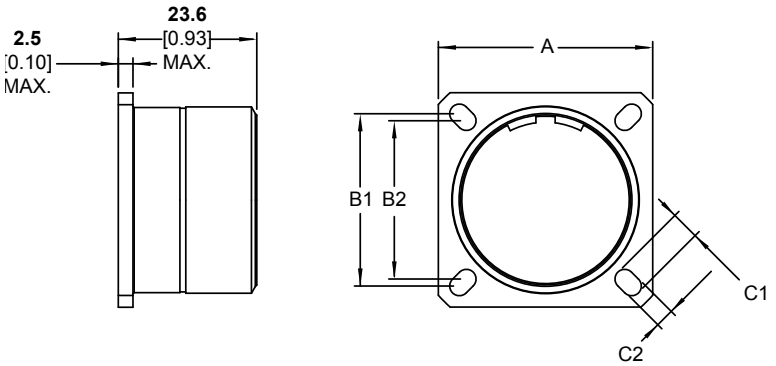

Size/ Arrangement	A Max.	B1	B2	C1 Min.	C2 Min.	G Max.
11-2	**26.4** 1.039	**20.62** 0.812	**18.26** 0.719	**4.84** 0.191	**3.16** 0.124	**3.52** 0.139
13-4	**28.81** 1.134	**23.01** 0.906	**20.62** 0.812	**4.84** 0.191	**3.16** 0.124	**3.52** 0.139
15-6	**31.2** 1.228	**24.61** 0.969	**23.01** 0.906	**4.31** 0.170	**3.16** 0.124	**3.52** 0.139
17-8	**33.51** 1.319	**26.97** 1.062	**24.61** 0.969	**4.84** 0.191	**3.16** 0.124	**3.52** 0.139
19-10	**36.71** 1.445	**29.36** 1.156	**26.97** 1.062	**4.84** 0.191	**3.16** 0.124	**3.52** 0.139
21-18	**39.91** 1.571	**31.75** 1.250	**29.36** 1.156	**4.84** 0.191	**3.16** 0.124	**4.33** 0.170
23-24	**43.11** 1.697	**34.93** 1.375	**31.75** 1.250	**6.06** 0.239	**3.83** 0.151	**4.33** 0.170
25-30	**46.21** 1.819	**38.1** 1.500	**34.93** 1.375	**6.06** 0.239	**3.83** 0.151	**4.33** 0.170

Millimeters Inches

DEUTSCH MC5 Connectors

MIL-DTL-38999 Style Series III Connectors

Procap
MC520E

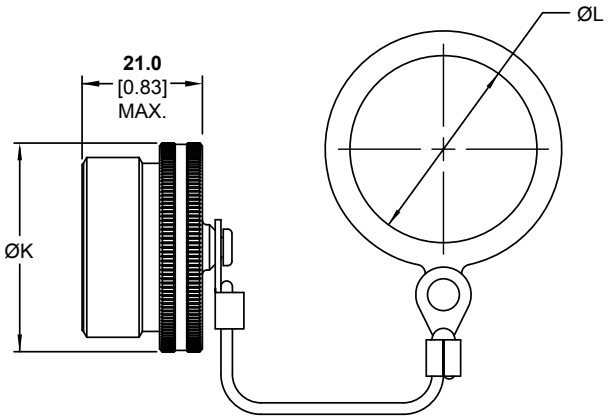

Procap
MC540E

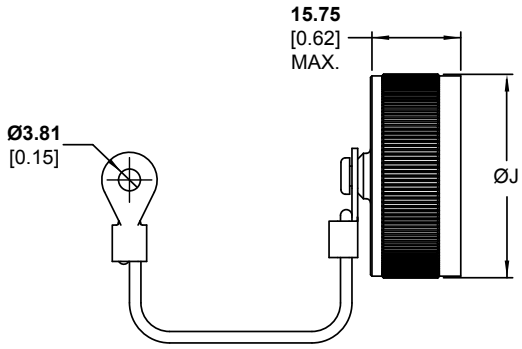

Size/ Arrangement	ØJ Max.	ØK Max.	ØL Min.
11-2	**22.96** 0.094	**24.00** 0.945	**16.51** 0.650
13-4	**26.06** 1.206	**27.56** 1.085	**19.56** 0.770
15-6	**29.26** 1.152	**31.10** 1.224	**22.86** 0.900
17-8	**34.16** 1.345	**35.46** 1.396	**26.04** 1.025
19-10	**35.66** 1.404	**37.16** 1.463	**29.21** 1.150
21-18	**38.75** 1.526	**40.10** 1.579	**32.39** 1.275
23-24	**42.06** 1.656	**43.36** 1.707	**35.56** 1.400
25-30	**44.96** 1.770	**46.6** 1.835	**38.74** 1.525

Millimeters Inches

DEUTSCH MC5 Connectors

MIL-DTL-38999 Style Series III Connectors

MC5 Optical Termini (ordered separately)

Optical termini are supplied with a profile formed optical end face and are available for single-mode or multimode fibers. Contacts are available in either spring-loaded or rigid versions, depending upon application. Rigid contacts should be used in bulkhead receptacles only.

Note: A crimp sleeve is not included for terminating 900-µm buffered cable.

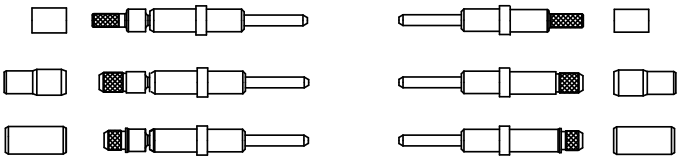

Spring Loaded **Rigid**

Ordering Information

455335 - 126 1-01

TERMINUS TYPE
- **455335** Spring Loaded
- **455360** Rigid

FERRULE FIBER HOLE SIZE (µM)
- **125**
- **126**
- **127**
- **128**
- **144**
- **159**
- **172**
- **175**

CABLE JACKET DIAMETER
- **1-00** 900 µm Buffer
- **1-01** 2.1 mm Dia.
- **1-02** 1.8 mm Dia.
- **1-03** 2.5 mm Dia.

Tooling

- **Crimp Tool:** Part No. 471716
- **Crimping Dies:** 457440

MC5 Backshells for Multifiber Cables (ordered separately)

A variety of backshells are available for multifiber cables, with peripheral strain relief (for 900-µm buffered cable) and central strain relief. Consult TE.

EASY TO USE

- Insert-to-insert keying aids in precision alignment
- Individually rear insertable and removable optical contacts
- Color band indicates full mating
- Easily accessible APC and PC end faces for cleaning and maintenance

VERSATILE

- Interchangeable with MIL-DTL-38999 Series III
- Backshells and adapters available for most single and multifiber cable types
- Insert accommodates 2 to 72 channels, and can be supplied pre-terminated
- Standard MT interface and multiple housing options help make integration into new and existing systems easy

RUGGED

- Lightweight, corrosion-resistant metal-plated composite shell
- Strong, durable and environmentally sealed
- Anti-vibration coupling with tri-start thread

DEUTSCH MC6 Fiber Optic Ribbon Cable Connectors

38999 Series III-Style Connectors

The DEUTSCH MC6 high-density fiber optic connector series is rugged, versatile, and easy to install and maintain. The connectors are compatible with standard MT ferrule inserts.

The MT ferrule inserts accommodate 2 to 72 channels and can be supplied pre-terminated, if required. The MC6 connector uses the compact MIL-DTL-38999 Series III, shell size 11 body, which is also used on the DEUTSCH MC5 connector.

MC6 connectors have a lightweight, corrosion resistant, metal-plated composite shell, which helps provide high strength and durability combined with excellent EMC shielding. MC6 connector shell are also available in aluminum and Marine Bronze materials

The result is a very compact, rugged, environmentally sealed solution for a wide range of applications, such as avionics, data bus and in-flight entertainment systems.

DEUTSCH MC6 Fiber Optic Ribbon Cable Connectors

38999 Series III-Style Connectors

Specifications

MATERIALS

- **Shell:** Aluminum, composite or Marine Bronze
- **Contact Body:** Nickel/cadmium plated composite polymer
- **Ferrule:** Thermoplastic
- **Alignment Pin:** Stainless steel
- **Seals:** Fluorinated silicone elastomer
- **Plating:** Nickel (Back zinc nickel available for aluminum shells)

OPTICAL

- **Insertion Loss:** 0.25 dB typ. (fiber dependent)
- **Return Loss:** -40 dB typ.
- **Repeatability:** 0.2 dB typ.

ENVIRONMENTAL/MECHANICAL

- **Temperature Range:** -55°C to +150°C
- **Vibration:** 20 to 2000 Hz, 20 g
- **Durability:** 500 mating cycles

FIBER TYPE

- **Channels:** 2 to 72
- **Cable Type:** Telecom grade cable
  Aerospace grade cable

Thread Sizes

Shell Size	Accessory Thread (6g .100R)	Mating Thread (0.1P-0.3L)	Jam Nut Thread (6g .100R)
11	M15 x 1.0	.7500	M20 x 1.0

DEUTSCH MC6 Fiber Optic Ribbon Cable Connectors

38999 Series III-Style Connectors

Connector Part Numbering

MC6 06 E - N - 11 - 01 N - F**

SERIES
MC6

STYLE
00 Bulkhead Receptacle
06 Plug
07 Jam Nut Receptacle

FINISH
N Nickel Plated
C Cadmium Plated

SHELL SIZE
11

NUMBER OF MT FERRULES
01

KEYING
N Normal
A, B, C

MODIFICATION CODE
Consult TE

MT Ferrule Part Numbering

MC6 - 12 SM - 01 - P

TYPE
MC6

NO. CHANNELS
12, 24

FERRULE TYPE
SM Single Mode
MM Multimode

CABLE TYPE
01 Ruggedized Aerospace Oval Multifiber Cable, 3.95 x 1.60 mm (0.156 x 0.063") Max.
02 Round Multifiber Cable 3.96 mm Dia. (0.156") Max.

FERRULE GENDER
P Pin (With Alignment Pins)
S Socket (No Alignment Pins)

DEUTSCH MC6 Fiber Optic Ribbon Cable Connectors

38999 Series III-Style Connectors

Square Flange Receptacle

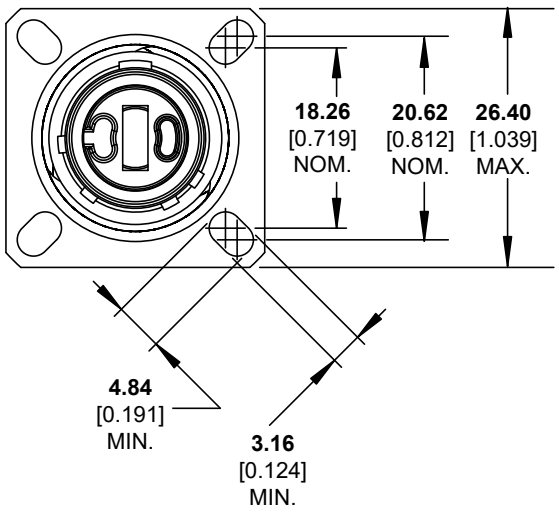

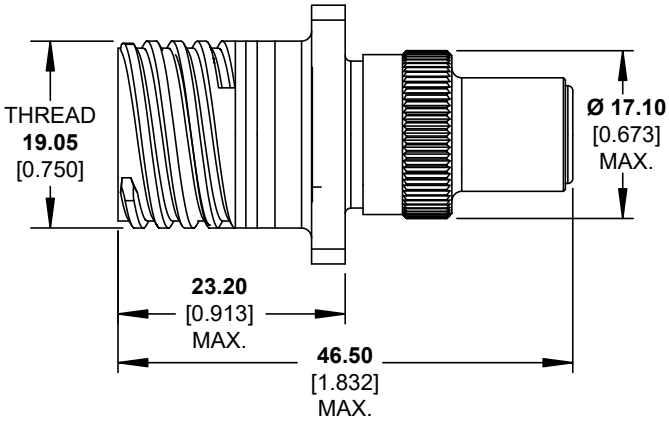

Jam Nut Receptacle

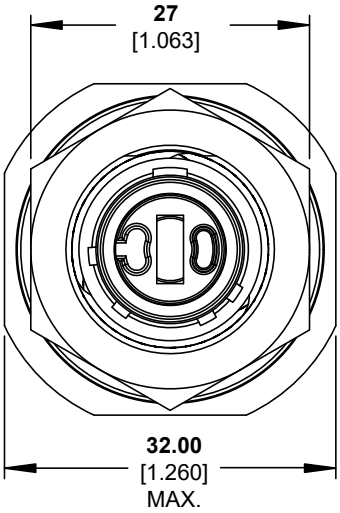

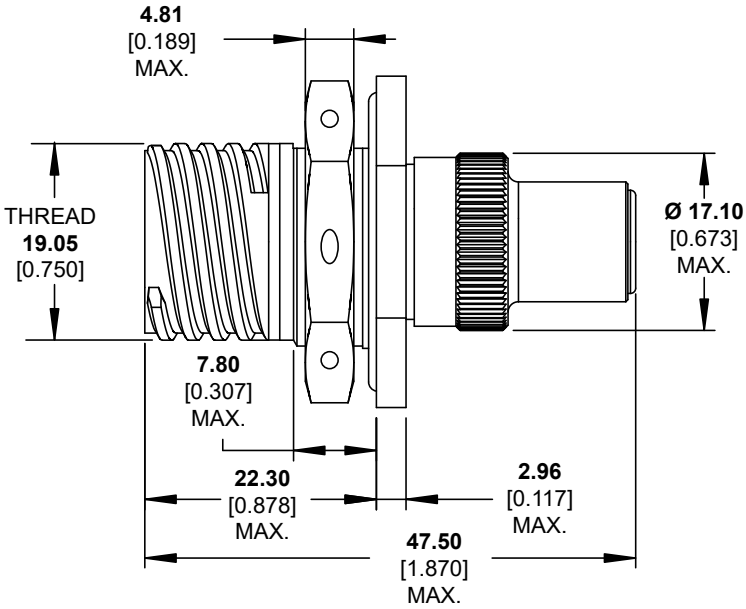

DEUTSCH MC6 Fiber Optic Ribbon Cable Connectors

38999 Series III-Style Connectors

Plug

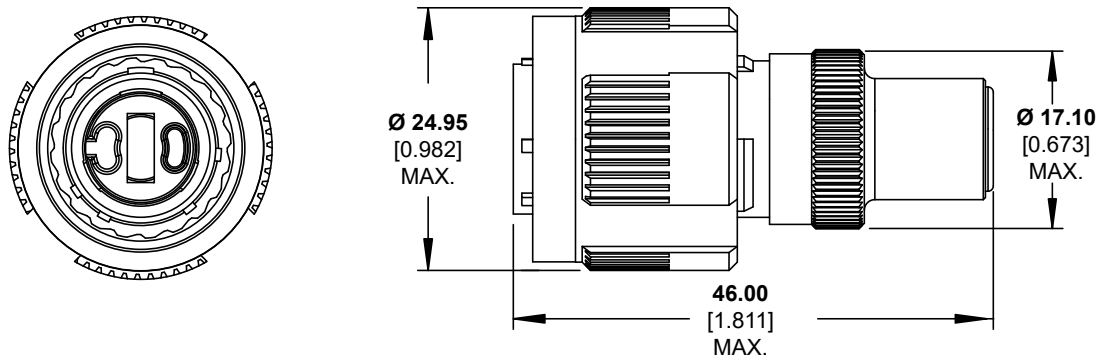

Dummy Receptacle

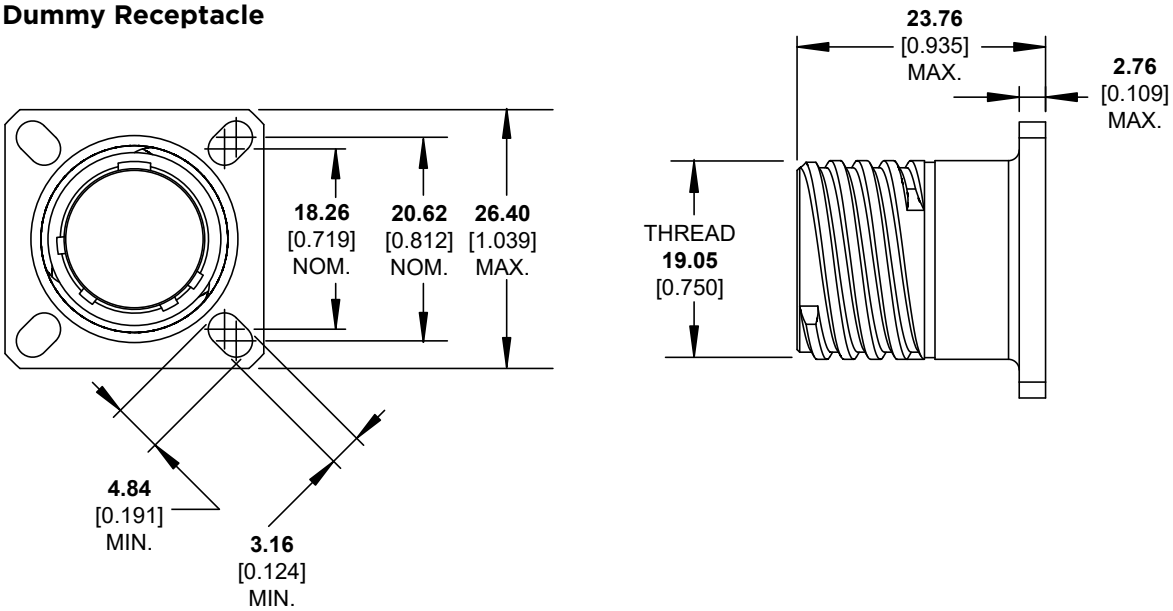

DEUTSCH MC6 Fiber Optic Ribbon Cable Connectors

38999 Series III-Style Connectors

Protective Caps for Receptacles

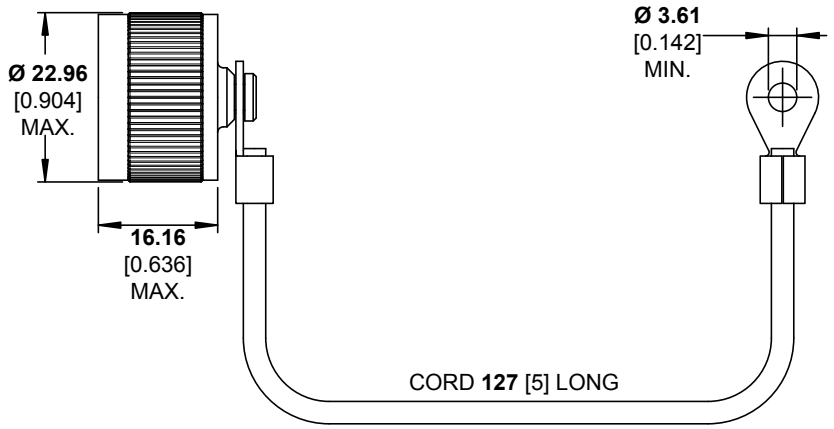

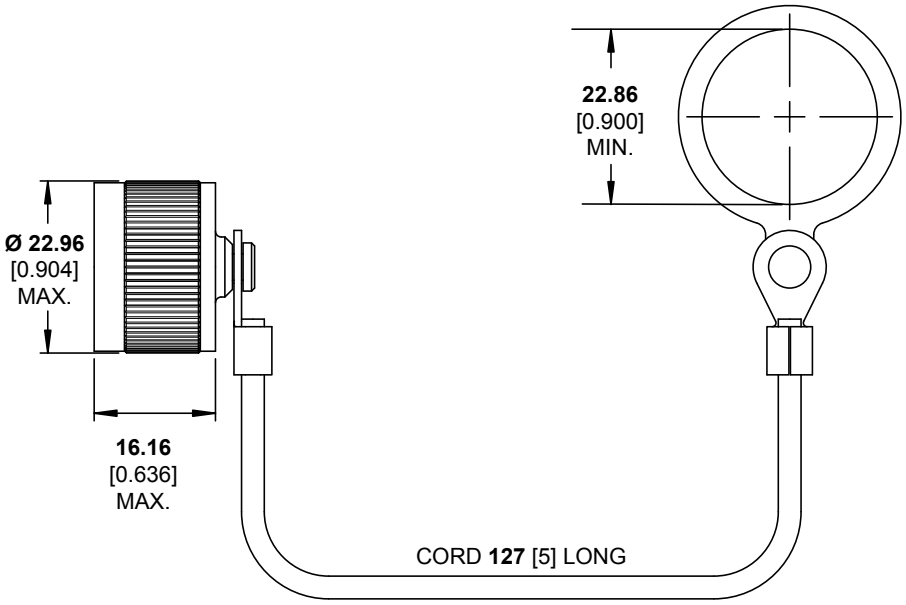

DEUTSCH MC6 Fiber Optic Ribbon Cable Connectors

38999 Series III-Style Connectors

Protective Caps for Plugs

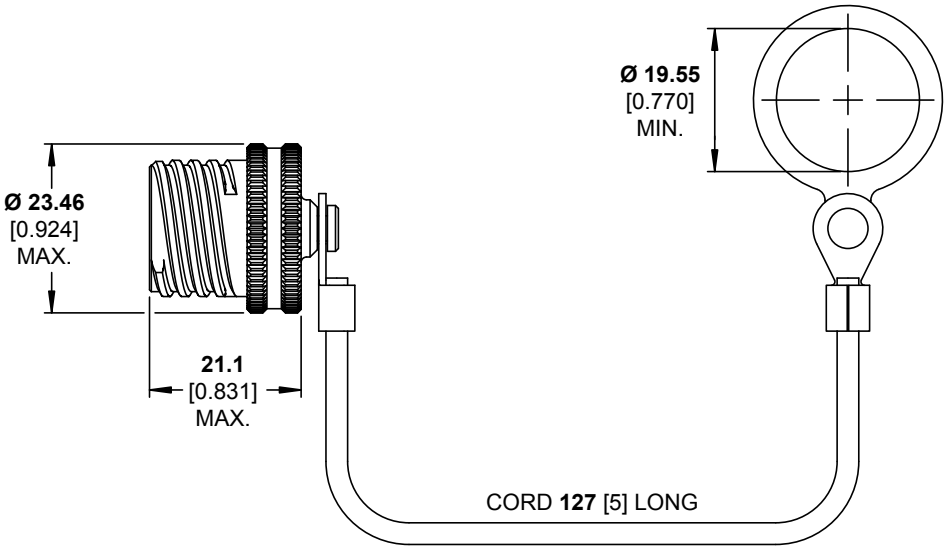

HIGH CAPACITY

- Holds four 12 or 24-fiber MT ferrules
- Up to 96 optical channels per connector
- Size 21 shell

EASY TO ASSEMBLE

- No special tools or fixtures required
- Only one part to assemble: the ferrule retainer to secure the ferrule
- Screwdriver is only tool required

HIGH PERFORMANCE

- Precision alignment for excellent optical performance
- Vibration resistant

COMPATIBLE

- Uses standard 38999 backshells

AviMT Connector

D38999 Series IIII Style Connector with Four MT Ferrules

The AviMT connector from TE Connectivity (TE) holds four MT ferrules—for up to 96 fibers—in a compact size 21 shell. The connector is well suited to applications requiring high fiber counts, such as UAV-based video surveillance, C5ISR, avionics, fiber backbone, radar and IFE systems.

Fast, Simple Assembly

The connector is very easily assembled, requiring only a screwdriver to fasten the ferrule retainer into place. The simple assembly contrasts dramatically with many connectors in the industry, which require special tools and fixtures to assemble multiple parts and subassemblies.

Specifications

MATERIALS

- **Shell:** Nickel-plated aluminum (Consult TE for other shell finishes)
- **Insert:** Thermoplastic
- **Front Retainer Ring:** Passivated stainless steel
- **Interfacial Seal:** Rubber
- **Ferrule Retainer:** Passivated stainless steel

OPTICAL (Tested with OM3 multimode fiber)

- **Insertion Loss (Avg.)**
  12-Fiber Ferrule: 0.12 dB
  24 Fiber Ferrule: 0.17 dB
- **Return Loss (Avg.)**
  12-Fiber Ferrule: 29.3 dB
  24 Fiber Ferrule: 29.8 dB

ENVIRONMENTAL/MECHANICAL

- **Low Temp Storage:** -50°C for 96 hours
- **High Temp Storage:** +85°C for 96 hours
- **Humidity Exposure:** Cycled to +55°C, 95% RH
- **Thermal Cycling:** -40°C to 70°C
- **Sine Sweep Vibration:** 10 Hz to 2000 Hz, 15 g peak
- **Random Vibration:** 16.91 grms
- **Mechanical Shock:** 50g

APPLICATIONS

- C5ISR
- Avionics
- Military aerospace
- Commercial aerospace ground radar
- Fiber backbone
- IFE systems

AviMT Connector

D38999 Series IIII Style Connector with Four MT Ferrules

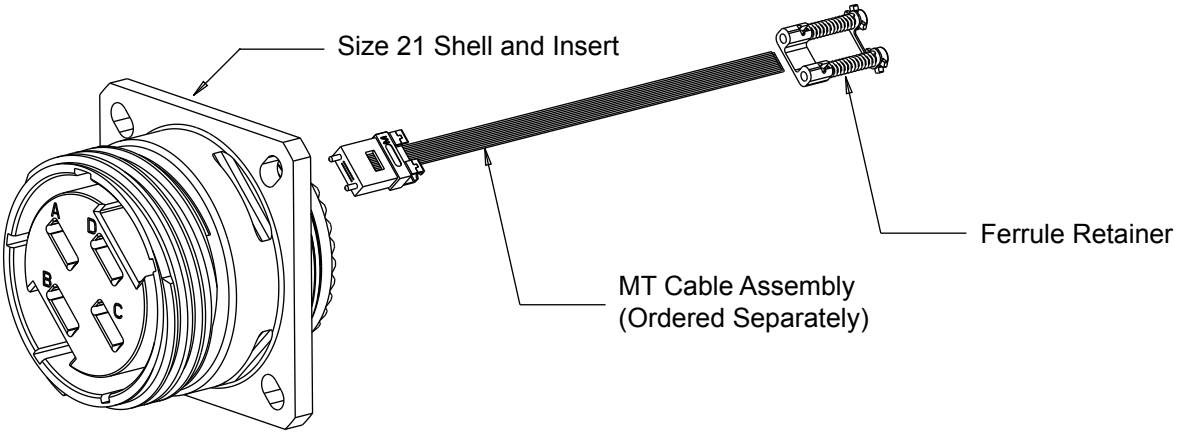

Ordering Information

Style	Part No.
Plug	2828342-1
Square Flange Receptacle	2828343-1
Jam Nut Receptacle	2320289-1

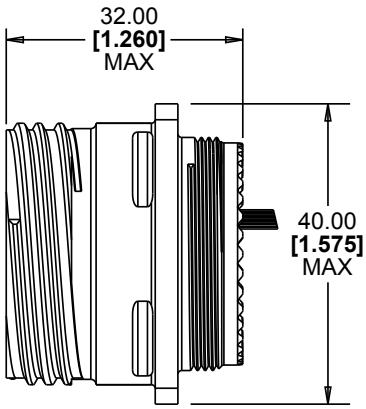

Square Flange Receptacle

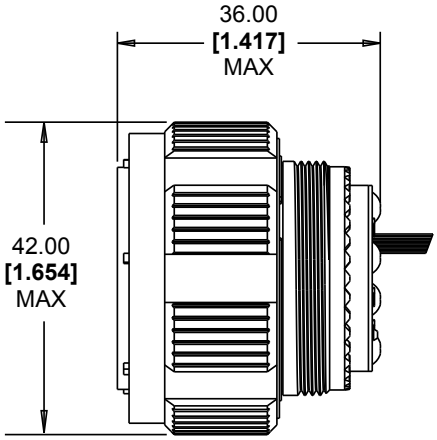

Plug

RUGGED

- Noncontacting fiber interface
- Minimal wear on fiber optic interface
- Vibration resistant

EASY TO USE

- Easy to handle
- Easy to clean
- Highly resistant to dirt/debris

CONSISTENT

- Repeatable low-loss performance in harsh environments
- Low sensitivity to thermal fluctuations and interface contamination
- Consistent overall optical link budget

VERSATILE

- Single mode or multimode
- Common 850/1300 dual, 1310, or 1550 nm wavelengths
- 2 or 4 optical channels in a size 15 shell
- 8 channels in a size 15 shell

38999-Style Connectors

Expanded beam inserts for 38999-style connectors use the same reliable insert technology as our PRO BEAM connectors. Available to accommodate 2 or 4 optical channels in a size 11 shell or 8 channels in a size 15 shell, the inserts give you many of the advantages of expanded beam interfaces in the familiar 38999 form factor.

Connector kits are available to accommodate popular fiber optic cable styles used in the military and aerospace industry—including tactical cable, 1.8 and 2.2-mm avionics cable, and buffered-only cable.

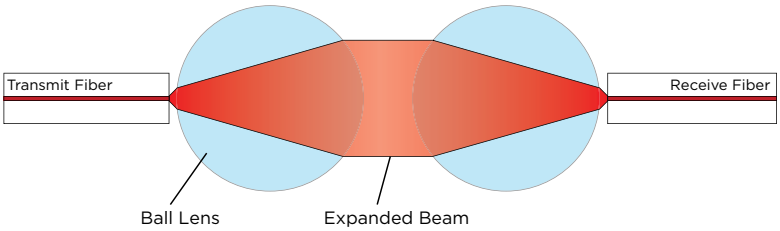

Expanded beam technology, which physically expands and collimates the transmission signal into an optical beam over 14 times its original diameter for multimode fiber and over 45 times for single-mode fiber. The beam is then refocused back down onto the core of the receiving fiber. This approach provides ease of alignment and low sensitivity to thermal changes and contamination.

38999-Style Connectors with Expanded Beam Inserts

Standard Styles

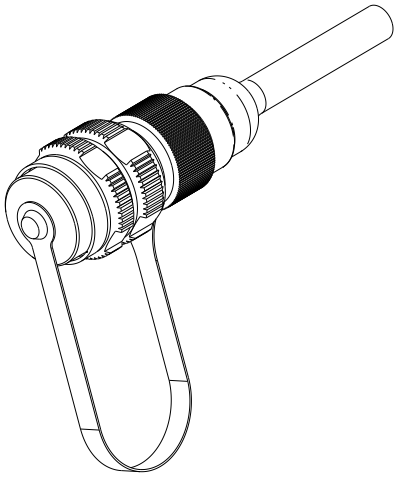

Plug Connector

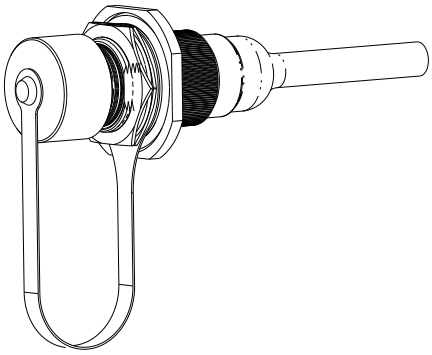

Jam Nut Receptacle Connector

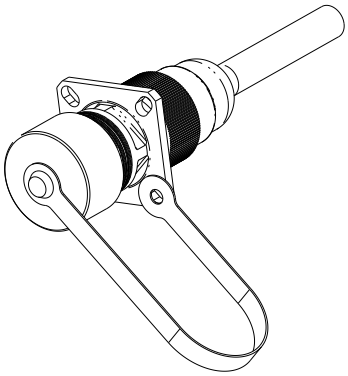

Square Flange Receptacle

Insert Kits

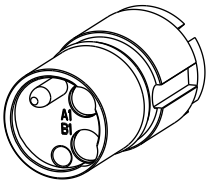

2-Channel Mini Insert
(Size 11 Shell)

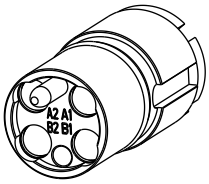

4 Channel Mini Insert
(Size 11 Shell)

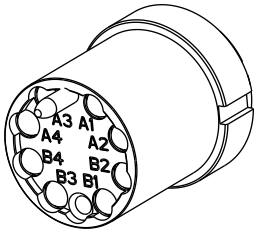

8-Channel Sr. Insert
(Size 15 Shell)

EB Insert Type	No. of Fibers	Part No.		
		Multimode 850/1300 nm	Single Mode 1310 nm	Single Mode 1550 nm
Mini	2	1374759-4	1588129-2	1588128-2
	4	1374759-2	1588129-3	1588128-3
Sr.	8	1516256-1	1516258-1	1516258-2

38999-Style Connectors with Expanded Beam Inserts

Shell Kits

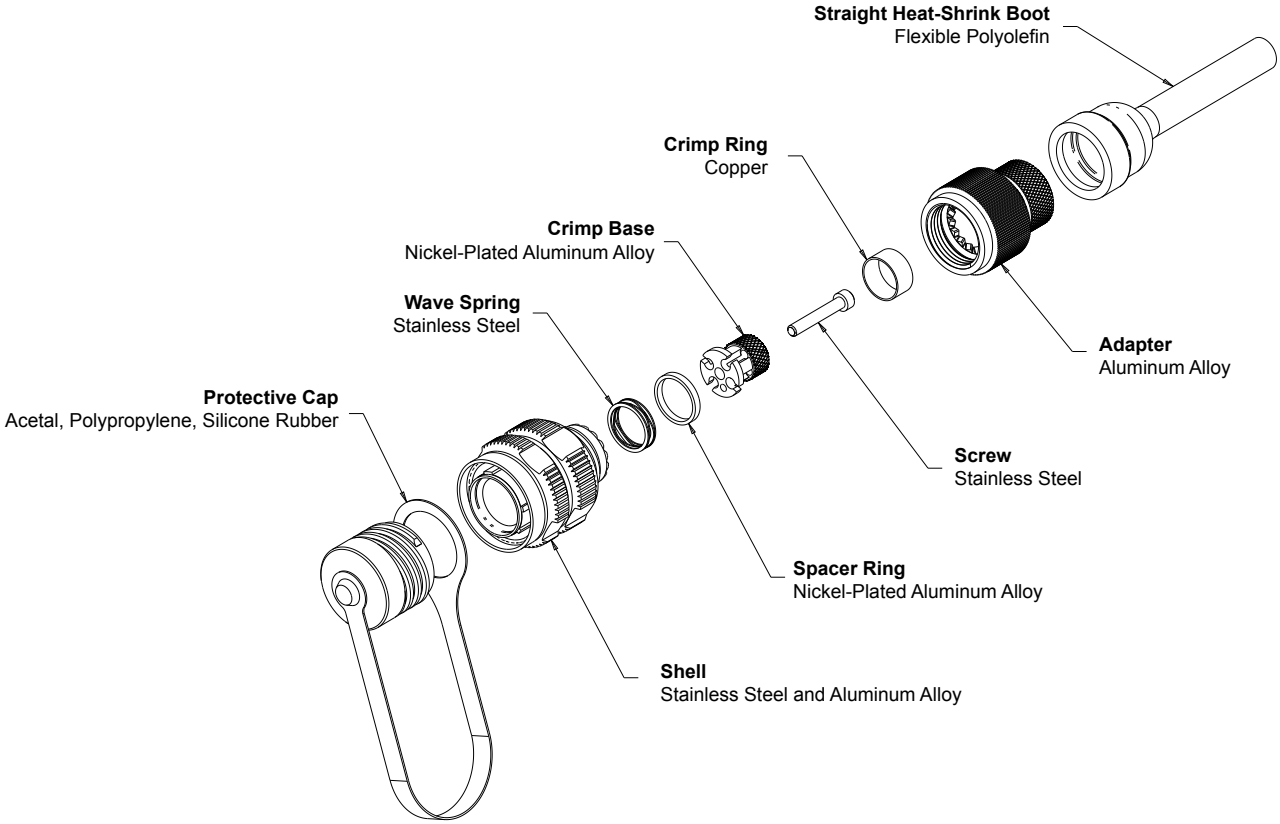

Typical Configuration and Materials
(Plug Connector Shown)

38999-Style Connectors with Expanded Beam Inserts

Ferrule Kits

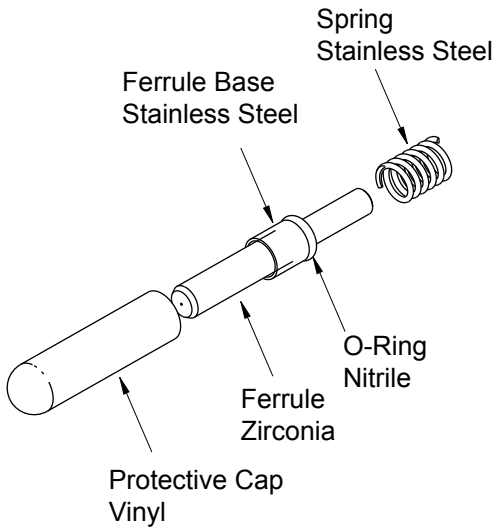

Fiber Hole Size (µm)	Fiber Type	Part No.	
		Mini	Sr.
125	Single Mode	1754700-1	1985635-1
126	Single Mode	1754700-2	1985635-2
	Multimode	1754699-1	1985107-1

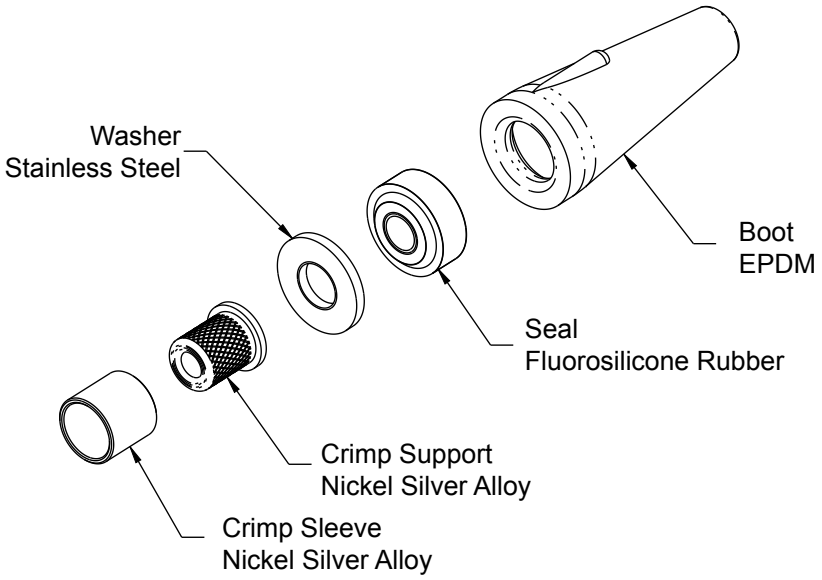

Cable Dia.	Part No.
5.1 mm	1516228-1
5.6 mm	1516228-2
6.2 mm	1516228-3

38999-Style Connectors with Expanded Beam Inserts

Shell Kits (Plug Connector Shown)

Typical Configuration and Materials

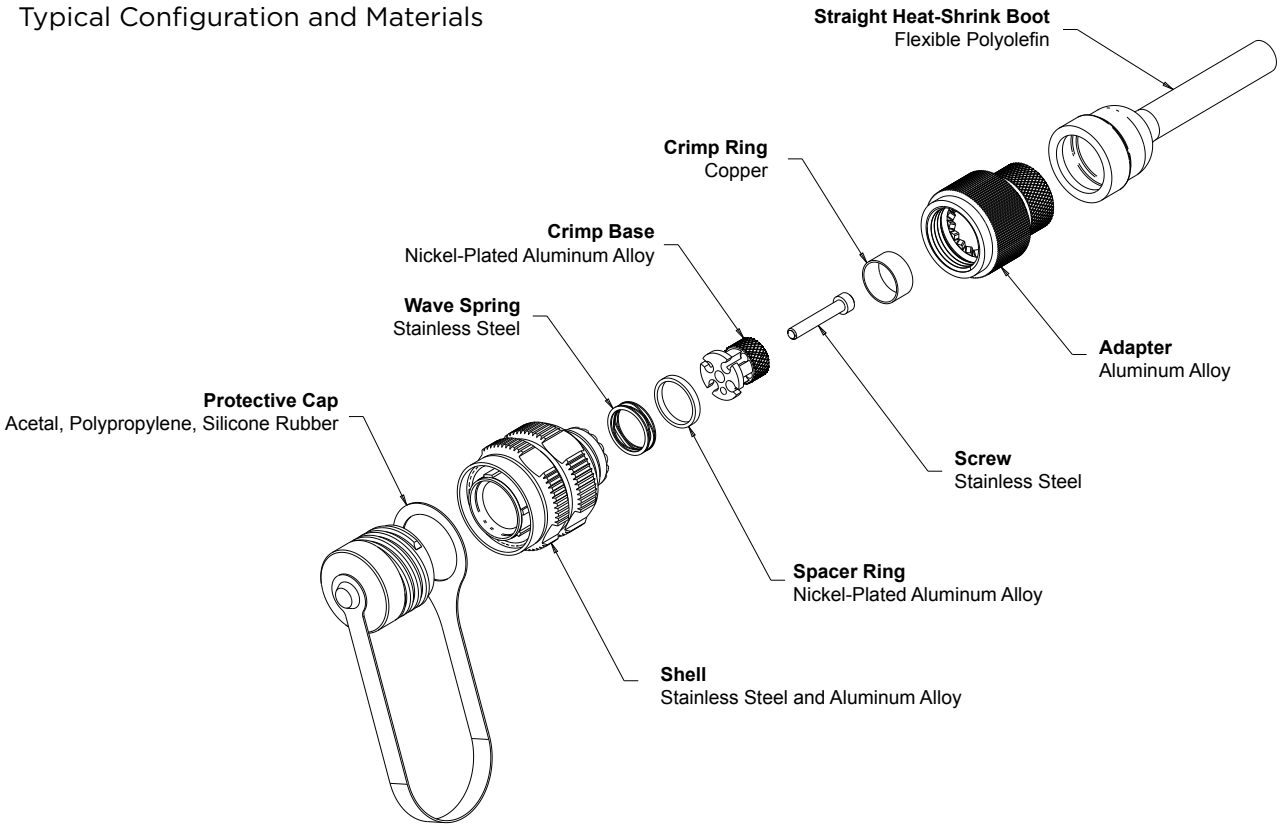

Shell Kits

Part numbers are for N keyed connectors with black zinc nickel finish.
Consult TE for other keying and plating options.

Shell Size 11 Kit

Connector Style	Part No.		
	1.8 mm Avionics Cable	Mil Tactical Distrib. Cable	Buffered Fiber
Plug	6754518-7	1-1985021-3	1-1918883-3
Jam Nut Receptacle	6754519-7	1-2064163-3	1-1918884-3
Flange-Mount Receptacle	—	1-2064166-3	1-1918885-3

Shell Size 15 Kit

Connector Style	Part No.	
	2.2 mm Avionics Cable	End Nut Backshell for Non-Jacketed Cable
Plug	1516342-7	1516338-7
Jam Nut Receptacle	1516343-7	1516339-7
Flange-Mount Receptacle	1516344-7	1516340-7

38999-Style Connectors with Expanded Beam Inserts

Plug
Shell Size 11

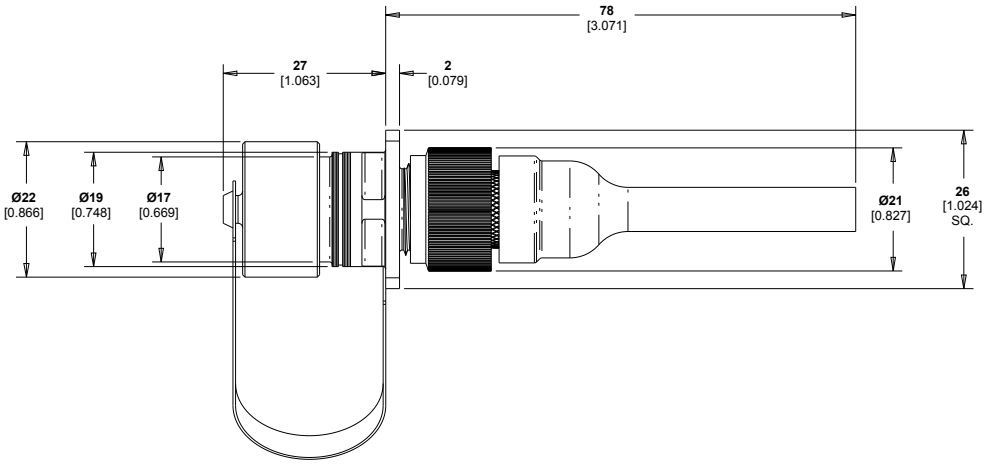

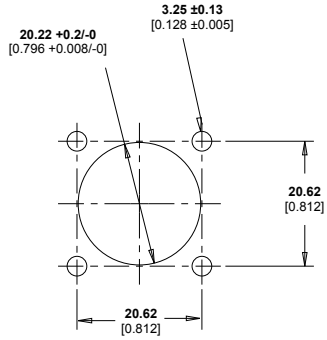

RECOMMENDED PANEL CUTOUT

Jam Nut Receptacle
Shell Size 11

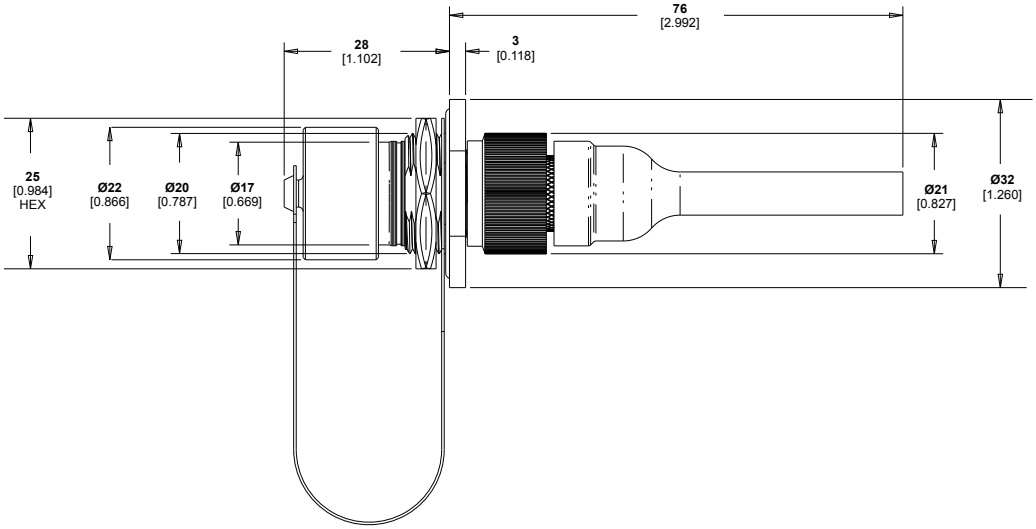

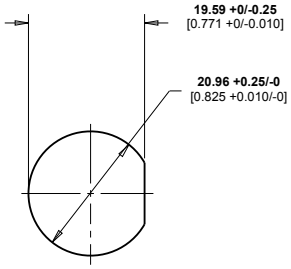

RECOMMENDED PANEL CUTOUT

38999-Style Connectors with Expanded Beam Inserts

Square Flange Receptacle
Shell Size 11

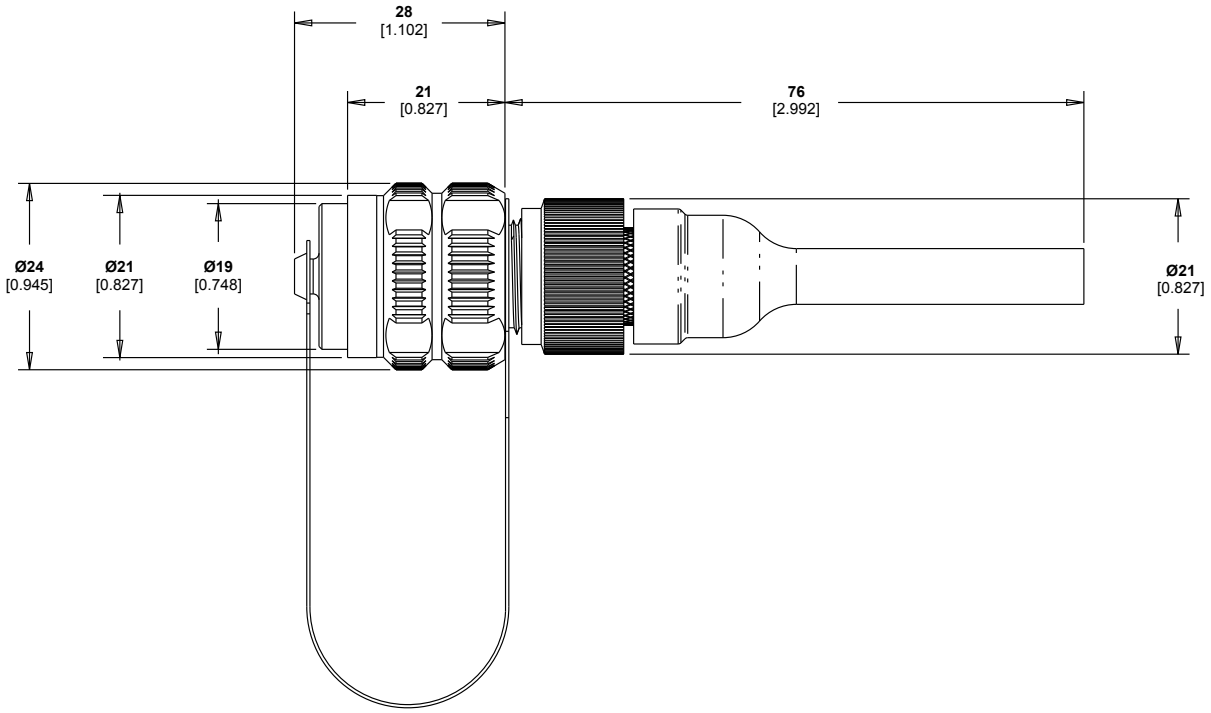

Recommended Panels Cutouts

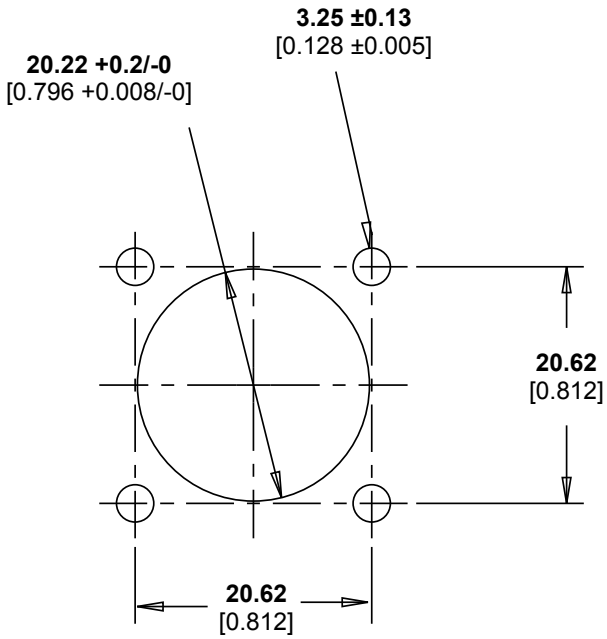

Square Flange Receptacle

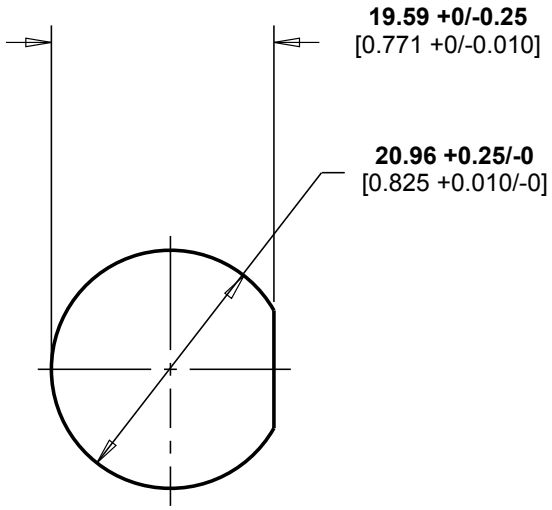

Jam Nut Receptacle

INDUSTRY STANDARDIZATION

- Selected for the ARINC 845 standard

DURABLE

- Minimal wear on fiber optic Interface
- Vibration resistant
- Resistant to dirt and debris

REPEATABLE LOW-LOSS PERFORMANCE

- Low sensitivity to thermal fluctuations and interface contamination
- Consistent overall optical "link budget"
- Stable operation over life of system

EASY TO USE

- Drop-in replacement for M29504/4 and /5 physical contact termini
- Durable non-contacting interface helps ensure ease of use/cleaning
- Simplified cleaning process

VERSATILE

- Fit standard size 16 cavity
- Field terminable

PRO BEAM EB16 Optical Termini

Bring Rugged Optical Performance to Mil-Standard Connectors

Leveraging our industry-accepted PRO BEAM expanded beam technology, the PRO BEAM EB16 termini are adding rugged, reliable optical performance to familiar Mil Spec connectors. The EB16 termini are a size 16 optical contact, fit-form compliant to MIL-DTL-38999 Series III size 16 cavities. These termini are a drop-in replacement for the M29504/4 and /5 physical contact termini used in many ruggedized circular connector systems.

Non-Contacting Interface

The non-contacting interface typically results in less wear and tear overall, especially in high-mating cycle or high-vibration applications.

The termini's ball lens physically expands and collimates the optical signal into an optical beam well beyond its original size to help provide easier optical alignment, lowers sensitivity to contamination, and helps provide consistent performance over thermal changes. The beam is then refocused back down onto the core of the receiving fiber.

The beam area is expanded 30 times between lenses. The signal will not deteriorate by airborne contamination particles of the same size that affect the performance of the PC connection. The termini's endface is easily cleaned.

PRO BEAM EB16 Optical Termini

Specifications

MATERIALS

- **Terminus Body and Crimp Sleeve:** Nickel-plated brass
- **Ferrule and Split Sleeve:** Zirconia
- **Ball Lens:** Glass, with antireflection coating
- **Spacer:** Stainless steel
- **Spring:** Stainless steel
- **Protective Cap:** Vinyl

MECHANICAL/ENVIRONMENTAL

- **Durability:** >1000 mating cycles
- **Operating Temperature:** -65°C to +165°C (Cable dependent)
- **Sinusoidal Vibration:** TIA/EIA-455-11C, Test Condition IV
- **Random Vibration:** TIA/EIA-455-11C, Test Condition VI-J
- **Mechanical Shock:** TIA/EIA-455-14A, Test Condition C
- **Thermal Cycling:** TIA/EIA-455-3B, Test Condition C-2
- **Thermal Shock:** TIA/EIA-455-71, Schedule C-0 (5 cycles)

OPTICAL

- **Insertion Loss:** 1.5 dB max. @ 850/1300 nm (Multimode fiber)

STANDARDS

- **Industry Standards:** SAE AS3 AS6250, AS6251, and ARINC 845
- **TE Application Specification:** 108-127013
- **TE Instruction Sheet:** 408-32132
- **TE Qualification Test Report:** 501-32028

APPLICATIONS

- Radar and Sensor Systems
- Rugged Network Applications
- Fixed Wing and Rotary Aircraft
- Unmanned Systems
- Commercial Aviation

Type	Part No.
Pin	2125059-1
Socket	2125046-1

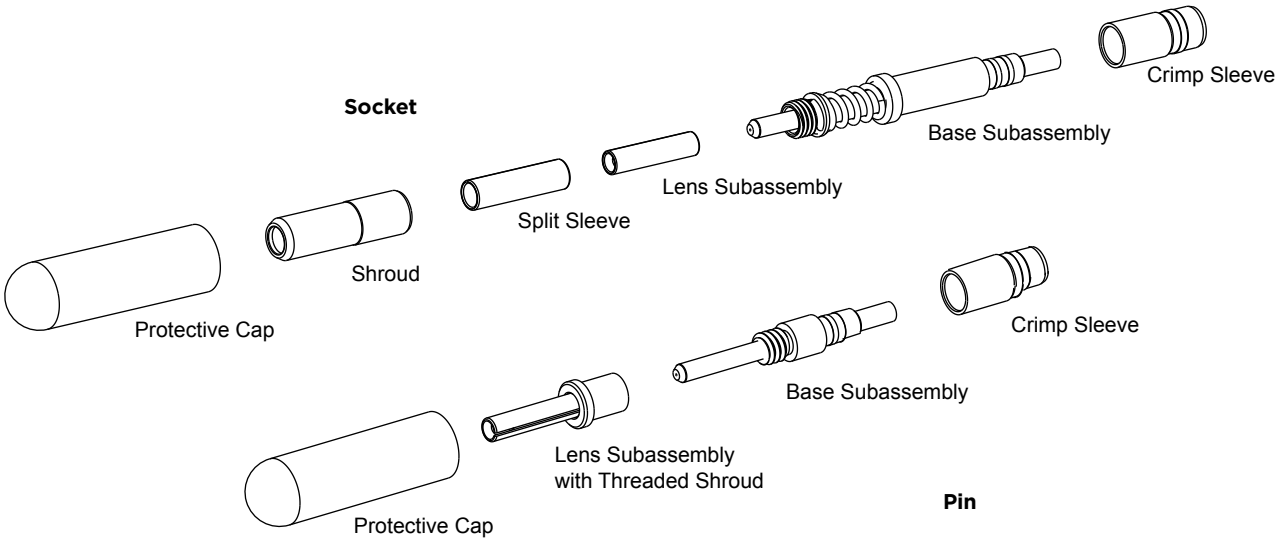

MIL SPEC

- Manufactured to meet the requirements of MIL-T-29504/4 and 5
- Designed for use in any MIL-DTL-38999 Size 16 cavity

HIGH PERFORMANCE

- Widely used in both rotary and fixed-wing aerospace applications
- Spring-loaded socket contacts help ensure consistent mating pressure and performance levels

MIL-T-29504 Style Optical Termini

Widely used in rotary and fixed-wing aerospace applications, our rugged optical termini is rated for 500 mating cycles and feature spring-loaded socket contacts to help ensure consistent mating pressure and performance levels. They are designed for use in any MIL-DTL-38999 Size 16 cavity, and manufactured to meet MIL-T-29504/4 and/5 requirements.

Specifications

FIBER TYPES

- **Single Mode:** 9/125 µm
- **Multimode:** 50/125, 62.5/125, 200/280 µm
- **Cable Size:** 1.8 mm, 2.5 mm

OPTICAL PERFORMANCE

(Depends on fiber type and finish)

- **Insertion Loss:** 0.6 dB typical
- **Return Loss:** -40 dB typical
- **Repeatability:** 0.2 dB typica

MATERIALS

- **Ferrule:** Zirconia
- **Alignment Sleeve:** Ceramic zirconia
- **Spring:** Stainless steel
- **Terminus Assembly:** ARCAP alloy
- **Heat Shrink Sleeve:** PVDF

ENVIRONMENTAL/MECHANICAL

- **Temperature Range:** -55°C to +150°C
- **Durability:** 500 mating cycles
- **Vibration:** 20 g, 20 to 2000 Hz

MIL-T-29504 Style Optical Termini

Socket (457462)

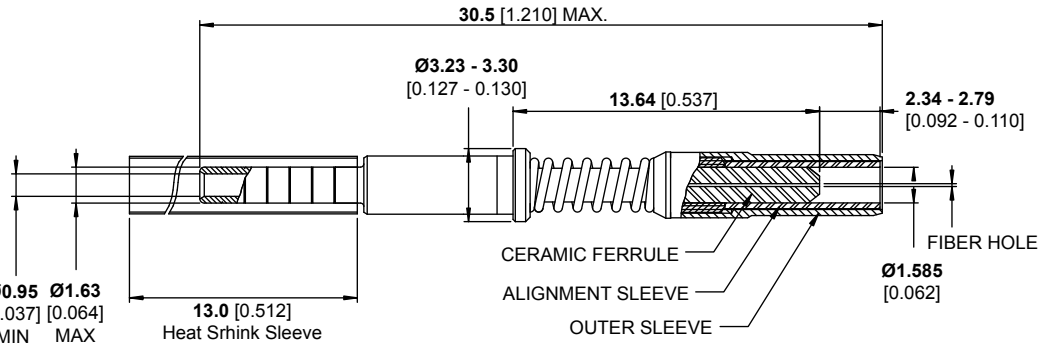

Pin (457463)

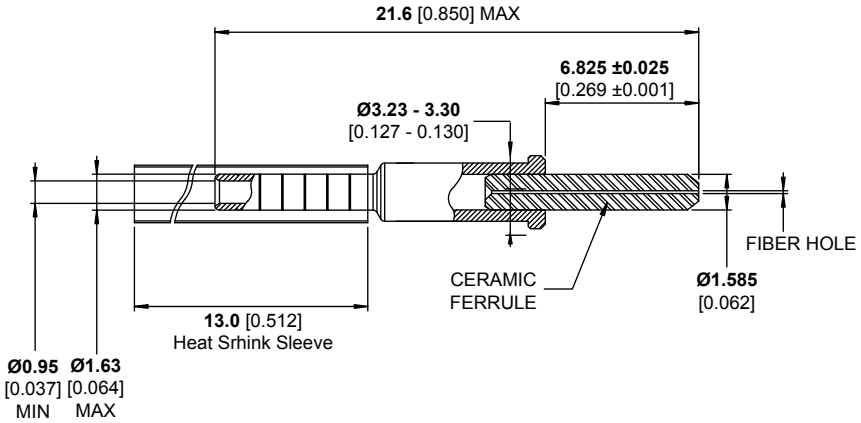

Part Numbering

457462 - 126 - 200

CONTACT TYPE
- **457462** Socket
- **457463** Pin

FERRULE FIBER HOLE SIZE (µM)
- **126**
- **127**
- **283**

CABLE JACKET DIAMETER
- **200** 1.2-2.0 mm
- **250** 2.0–2.5 mm

EASY TO USE

- Screen termination by stainless steel band
- Sealing and strain relief of backshell by heat shrink boot

VERSATILE

- Versions for all 38999 series
- Straight, 45°, and 90° profiles
- Optional pigtail termination slots

POLAMCO BT Series Banding Backshells

BT Series backshells terminate the shield with a stainless steel band strap. Additional strain relief can be obtained with a heat-shrink boot.

Part Numbering System

BT H 1 - 17 - 08 - 1 - C SL

SERIES
- **BT** Banding Backshell

CONNECTOR INTERFACE
- **F** 38999 Series I and II
- **H** 38999 Series III and IV

ANGLE
- **1** Straight
- **2** 45°
- **3** 90°

SHELL SIZE
- **09, 11, 13, 15, 17, 19, 21, 23, 25**

ENTRY SIZE
- See Entry Size Table

MATERIAL
- **1** Aluminum Alloy

FINISH
- **C** Electroless Nickel
- **B** Cadmium Olive Drab over Electroless Nickel
- **ZB** Zinc Cobalt Olive Drab over Electroless Nickel
- **ZN** Zinc Nickel Black Passivate over Electroless Nickel

SLOT OPTION
- Omit For Standard (No Slot)
- **SL** With Slots

POLAMCO BT Series Banding Backshells

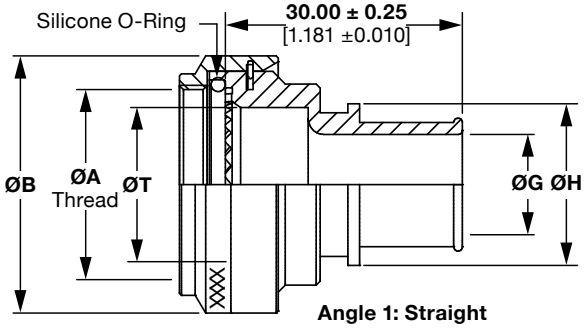

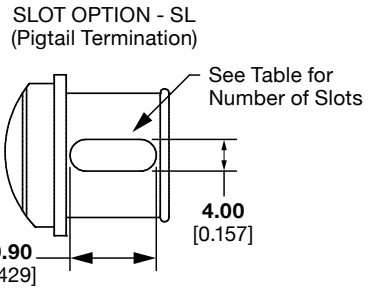

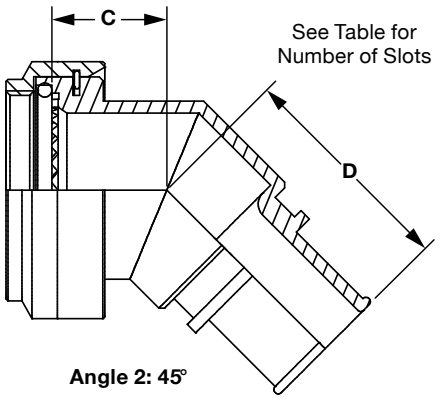

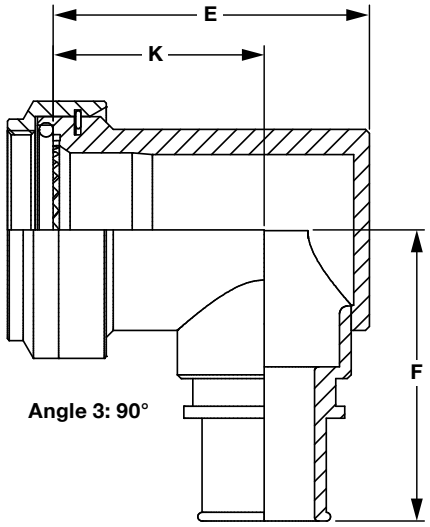

BTF Series for 38999 Series I (Consult TE for Series II)

Shell Size	A Thread BTH (BTF)	ØB Max. BTF	ØT Min.	C Max.	D Max.	E Max.	F Max.	K ±0.5 (0.020)
09	7/16-28	**18.3** 0.720	**6.7** 0.264	**13.1** 0.516	**25.7** 1.012	**25.7** 1.012	**30.5** 1.201	**17.5** 0.689
11	9/16-24	**21.5** 0.846	**10.2** 0.402	**13.9** 0.547	**26.9** 1.059	**26.7** 1.051	**32.2** 1.268	**17.5** 0.689
13	11/16-24	**24.5** 0.965	**13.5** 0.531	**14.5** 0.571	**27.3** 1.075	**31.2** 1.228	**33.7** 1.327	**20.0** 0.787
15	13/16-20	**27.8** 1.094	**16.2** 0.638	**15.5** 0.610	**28.2** 1.110	**37.2** 1.465	**35.2** 1.386	**24.5** 0.965
17	15/16-20	**30.8** 1.213	**19.4** 0.764	**16.1** 0.634	**29.0** 1.142	**40.2** 1.583	**36.9** 1.453	**26.7** 1.051
19	1-1/16-18	**34.1** 1.343	**21.8** 0.858	**16.8** 0.661	**29.3** 1.154	**44.7** 1.760	**38.5** 1.516	**27.0** 1.063
21	1-3/16-18	**37.3** 1.469	**25.1** 0.988	**17.1** 0.673	**30.1** 1.185	**49.2** 1.937	**40.1** 1.579	**30.5** 1.201
23	1-5/16-18	**40.5** 1.594	**28.2** 1.110	**17.7** 0.697	**30.5** 1.201	**51.7** 2.035	**41.6** 1.638	**31.5** 1.240
25	1-7/16-18	**43.7** 1.720	**31.4** 1.236	**18.4** 0.724	**31.4** 1.236	**53.2** 2.094	**43.1** 1.697	**28.5** 1.122

Millimeters Inches

POLAMCO BT Series Banding Backshells

BTH Series for 38999 Series III and IV

Shell Size	A Thread	ØB Max.	ØT Min.	C Max.	D Max.	E Max.	F Max.	K ±0.5 (0.020)
09	M12 x 1.0	**18.0** 0.709	**6.7** 0.264	**13.1** 0.516	**25.7** 1.012	**25.7** 1.012	**30.5** 1.201	**17.5** 0.689
11	M15 x 1.0	**21.0** 0.827	**10.2** 0.402	**13.9** 0.547	**26.9** 1.059	**26.7** 1.051	**32.2** 1.268	**17.5** 0.689
13	M18 x 1.0	**24.5** 0.965	**13.5** 0.531	**14.5** 0.571	**27.3** 1.075	**31.2** 1.228	**33.7** 1.327	**20.0** 0.787
15	M22 x 1.0	**29.0** 1.142	**16.2** 0.638	**15.5** 0.610	**28.2** 1.110	**37.2** 1.465	**35.2** 1.386	**24.5** 0.965
17	M25 x 1.0	**32.5** 1.280	**19.4** 0.764	**16.1** 0.634	**29.0** 1.142	**40.2** 1.583	**36.9** 1.453	**26.7** 1.051
19	M28 x 1.0	**35.5** 1.398	**21.8** 0.858	**16.8** 0.661	**29.3** 1.154	44.7 1.760	**38.5** 1.516	**27.0** 1.063
21	M31 x 1.0	**37.0** 1.457	**25.1** 0.988	**17.1** 0.673	**30.1** 1.185	**49.2** 1.937	**40.1** 1.579	**30.5** 1.201
23	M34 x 1.0	**40.0** 1.575	**28.2** 1.110	**17.7** 0.697	**30.5** 1.201	**51.7** 2.035	**41.6** 1.638	**31.5** 1.240
25	M37 x 1.0	**43.5** 1.713	**31.4** 1.236	**18.4** 0.724	**31.4** 1.236	**53.2** 2.094	**43.1** 1.697	**28.5** 1.122

Millimeters Inches

Entry Size Dimensions

Entry Size	ØG Min.	ØH Max.	No. Of Optional Slots
03	**4.7** 0.185	**13.9** 0.547	1
04	**6.3** 0.248	**13.9** 0.547	1
05	**7.9** 0.311	**15.5** 0.610	1
06	**9.5** 0.374	**17.2** 0.677	2
07	**11.1** 0.437	**18.7** 0.736	2
08	**12.7** 0.500	**20.3** 0.799	2
09	**14.2** 0.559	**21.9** 0.862	2
10	**15.8** 0.622	**23.5** 0.925	2
11	**17.4** 0.685	**25.1** 0.988	2
12	**19.0** 0.748	**26.7** 1.051	2
13	**20.6** 0.811	**28.3** 1.114	2

Millimeters Inches

Entry Size	ØG Min.	ØH Max.	No. Of Optional Slots
14	**22.2** 0.874	**29.9** 1.177	4
15	**23.8** 0.937	**31.5** 1.240	4
16	**25.4** 1.000	**33.1** 1.303	4
17	**27.0** 1.063	**34.7** 1.366	4
18	**28.6** 1.126	**36.3** 1.429	4
19	**30.2** 1.189	**37.9** 1.492	4
20	**31.8** 1.252	**39.5** 1.555	4
21	**33.3** 1.311	**41.1** 1.618	4
22	**35.0** 1.378	**42.7** 1.681	4
23	**36.5** 1.437	**44.3** 1.744	4
24	**38.1** 1.500	**45.9** 1.807	4

Millimeters Inches

EASY TO USE

- Individual screen termination using castellated cone
- No application tooling required for termination or re-work
- Alternate angles and lengths on request

RELIABLE

- Sealing and strain relief of backshell by heat shrink boot
- Solid machined construction for reliable strength and performance
- Cable clamp option available for additional mechanical strain relief

VERSATILE

- Plain nut version available
- Cone clamp feature may be re-used
- Straight, 45 degree, and 90 degree standard
- Aluminum, bronze, and stainless steel

POLAMCO 64 Series Cone Clamp Adapters

The 64 Series adapters terminate individual shields with a castellated cone to compress the braid.

Part Numbering System

64 F 1 - 17 - 1 - C - CC

SERIES
- **64** Cone Clamp Adapter

CONNECTOR INTERFACE
- **F** 38999 Series I and II
- **H** 38999 Series III and IV

ANGLE
- **1** Straight
- **2** 45°
- **3** 90°

SHELL SIZE
- **09, 11, 13, 15, 17, 19, 21, 23, 25**

MATERIAL
- **1** Aluminum Alloy

FINISH
- **C** Electroless Nickel
- **B** Cadmium Olive Drab over Electroless Nickel
- **ZB** Zinc Cobalt Olive Drab over Electroless Nickel
- **ZN** Zinc Nickel Black Passivate over Electroless Nickel

CABLE CLAMP OPTION
- Omit for Plain Nut
- <Other options?>

POLAMCO 64 Series Cone Clamp Adapters

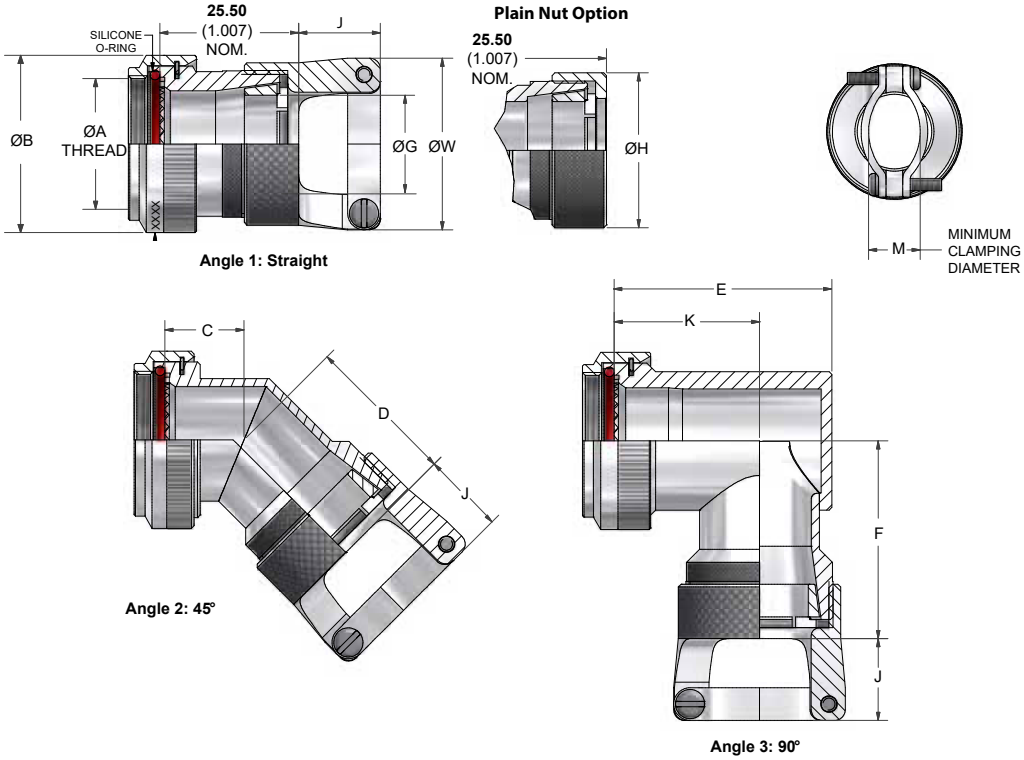

64F Series for 38999 Series I Connectors (Consult TE for Series II)

Shell Size	A Thread (UNEF)	ØB Max.	C ±0.5 (0.020)	D Max.	E Max.	F Max.	ØG Min.	ØW Max.	ØH Max.	J Max.	K ±0.5 (0.020)	M ±0.5 (0.020)
09	7/16-28	**18.0** 0.709	**16.4** 0.646	**24.6** 0.969	**22.7** 0.894	**30.1** 1.185	**6.6** 0.260	**20.7** 0.815	**16.0** 0.630	**15.2** 0.598	**15.0** 0.591	**7.8** 0.307
11	9/16-24	**21.0** 0.827	**17.2** 0.677	**25.4** 1.000	**26.2** 1.031	**31.9** 1.256	**9.3** 0.366	**23.8** 0.937	**19.0** 0.748	**15.2** 0.598	**17.0** 0.669	**8.6** 0.339
13	11/16-24	**24.5** 0.965	**17.6** 0.693	**26.3** 1.035	**29.2** 1.150	**33.4** 1.315	**12.6** 0.496	**27.0** 1.063	**22.0** 0.866	**15.2** 0.598	**18.0** 0.709	**10.2** 0.402
15	13/16-20	**27.8** 1.094	**18.5** 0.728	**26.7** 1.051	**32.2** 1.268	**34.9** 1.374	**14.6** 0.575	**28.6** 1.126	**25.4** 1.000	**15.2** 0.598	**20.0** 0.787	**10.4** 0.409
17	15/16-20	**30.8** 1.213	**19.2** 0.756	**27.5** 1.083	**35.7** 1.406	**36.6** 1.441	**17.7** 0.697	**31.8** 1.252	**28.5** 1.122	**15.2** 0.598	**21.5** 0.846	**12.4** 0.488
19	1-1/16-18	**34.1** 1.343	**19.6** 0.772	**27.8** 1.094	**39.7** 1.563	**38.2** 1.504	**19.8** 0.780	**35.0** 1.378	**32.0** 1.260	**18.2** 0.717	**23.0** 0.906	**15.4** 0.606
21	1-3/16-18	**37.3** 1.469	**20.4** 0.803	**28.6** 1.126	**42.2** 1.661	**39.8** 1.567	**23.0** 0.906	**38.1** 1.500	**35.0** 1.378	**18.2** 0.717	**25.0** 0.984	**17.3** 0.681
23	1-5/16-18	**41.0** 1.614	**20.8** 0.819	**29.5** 1.161	**45.2** 1.780	**41.3** 1.626	**26.2** 1.031	**39.7** 1.563	**38.0** 1.496	**18.2** 0.717	**26.0** 1.024	**18.8** 0.740
25	117/16-18	**43.7** 1.720	**21.7** 0.854	**29.9** 1.177	**48.2** 1.898	**42.8** 1.685	**29.1** 1.146	**44.5** 1.752	**41.0** 1.614	**18.2** 0.717	**28.0** 1.102	**22.4** 0.882

Millimeters Inches

POLAMCO 64 Series Cone Clamp Adapters

64H Series for 38999 Series III and IV

Shell Size	A Thread	ØB Max.	C ±0.5 (0.020)	D Max.	E Max.	F Max.	ØG Min.	ØW Max.	ØH Max.	J Max.	K ±0.5 (0.020)	M ±0.5 (0.020)
09	M12 x 1.0	**18.0** 0.709	**13.1** 0.516	**24.6** 0.969	**25.7** 1.012	**30.1** 1.185	**6.6** 0.260	**20.7** 0.815	**16.0** 0.630	**15.2** 0.598	**17.5** 0.689	**7.8** 0.307
11	M15 x 1.0	**21.0** 0.827	**13.9** 0.547	**25.4** 1.000	**26.7** 1.051	**31.9** 1.256	**9.3** 0.366	**23.8** 0.937	**19.0** 0.748	**15.2** 0.598	**17.5** 0.689	**8.6** 0.339
13	M18 x 1.0	**24.5** 0.965	**14.5** 0.571	**26.3** 1.035	**31.2** 1.228	**33.4** 1.315	**12.6** 0.496	**27.0** 1.063	**22.0** 0.866	**15.2** 0.598	**20.0** 0.787	**10.2** 0.402
15	M22 x 1.0	**29.0** 1.142	**15.5** 0.610	**26.7** 1.051	**37.2** 1.465	**34.9** 1.374	**14.6** 0.575	**28.6** 1.126	**26.5** 1.043	**15.2** 0.598	**24.5** 0.965	**10.4** 0.409
17	M25 x 1.0	**32.5** 1.280	**16.1** 0.634	**27.5** 1.083	**40.2** 1.583	**36.6** 1.441	**17.7** 0.697	**31.8** 1.252	**29.8** 1.173	**15.2** 0.598	**26.7** 1.051	**12.4** 0.488
19	M28 x 1.0	**35.5** 1.398	**16.8** 0.661	**27.8** 1.094	**44.7** 1.760	**38.2** 1.504	**19.8** 0.780	**35.0** 1.378	**33.0** 1.299	**18.2** 0.717	**27.0** 1.063	**15.4** 0.606
21	M31 x 1.0	**37.0** 1.457	**17.1** 0.673	**28.6** 1.126	**49.2** 1.937	**39.8** 1.567	**23.0** 0.906	**38.1** 1.500	**35.0** 1.378	**18.2** 0.717	**30.5** 1.201	**17.3** 0.681
23	M34 x 1.0	**40.0** 1.575	**17.7** 0.697	**29.5** 1.161	**51.7** 2.035	**41.3** 1.626	**26.2** 1.031	**39.7** 1.563	**38.0** 1.496	**18.2** 0.717	**31.5** 1.240	**18.8** 0.740
25	M37 x 1.0	**43.5** 1.713	**18.4** 0.724	**29.9** 1.177	**53.2** 2.094	**42.8** 1.685	**29.1** 1.146	**44.5** 1.752	**41.0** 1.614	**18.2** 0.717	**28.5** 1.122	**22.4** 0.882

Millimeters Inches

VERSATILE

- Interfaces with 38999 Series I, II, III and IV connectors
- Available in straight, 45°, and 90° angle mounting configurations
- Variety of finishes available

LIGHTWEIGHT

- Aluminum alloy saves weight
- Low-profile shield termination

HIGH RELIABILITY

- Magna-form memory ring adapter technology
- Optional pre-terminated braid sock

POLAMCO 70 Series Memory Ring Adapters

The 70 Series adapters help provide a high-reliability, low profile shield termination using magna-form memory ring technology. The adapters are available with an optional pre-terminated braid sock.

Part Numbering System

70 F 1 - 17 - 08 - 1 - C - N

SERIES
- **70** Memory Ring Adapter with Optional Braid Tail Material

CONNECTOR INTERFACE
- **F** 38999 Series I and II
- **H** 38999 Series III and IV

ANGLE
- **1** Straight
- **2** 45°
- **3** 90°

SHELL SIZE
- **09, 11, 13, 15, 17, 19, 21, 23, 25**

ENTRY SIZE
- See Entry Size Table

MATERIAL
- **1** Aluminum Alloy

FINISH
- **C** Electroless Nickel
- B Cadmium Olive Drab over Electroless Nickel
- **ZB** Zinc Cobalt Olive Drab over Electroless Nickel
- **ZN** Zinc Nickel Black Passivate over Electroless Nickel

BRAID TAIL
- Omit for Tinned Copper
- **N** Nickel-Plated Braid

POLAMCO 70 Series Memory Ring Adapters

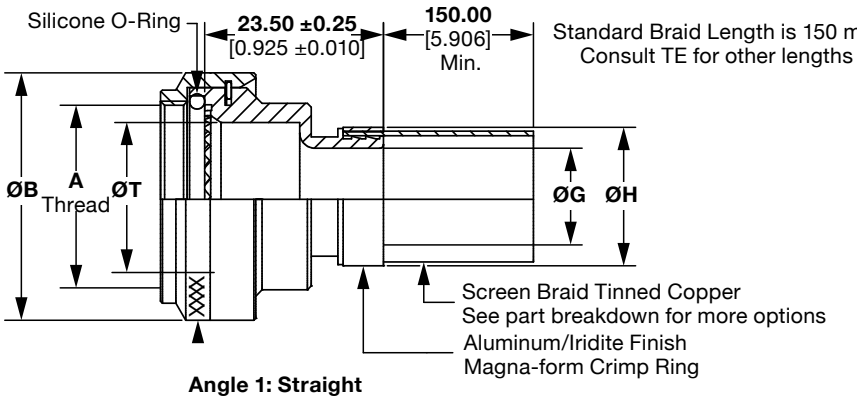

Angle 1: Straight

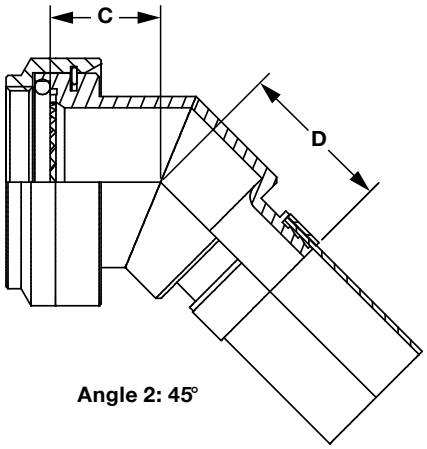

Angle 2: 45°

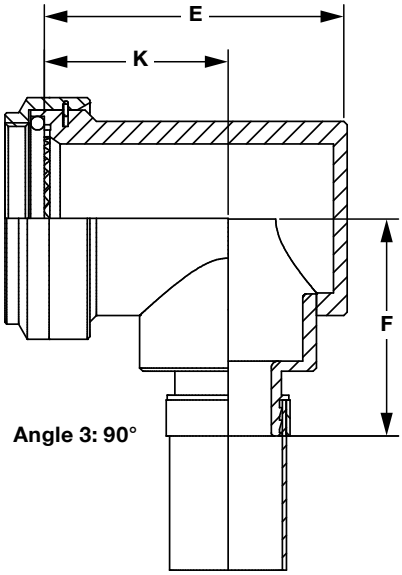

Angle 3: 90°

70F Series for 38999 Series I (Consult TE for Series II)

Shell Size	A Thread (UNEF)	ØB Max.	ØT Min.	C Max.	D ±0.5 (0.020)	E Max.	F Max.	K ±0.5 (0.020)
09	7/16-28	**18.0** 0.709	**6.8** 0.268	**16.4** 0.646	**17.1** 0.673	**22.7** 0.894	**24.0** 0.945	**15.0** 0.591
11	9/16-24	**21.0** 0.827	**10.2** 0.402	**17.2** 0.677	**18.2** 0.717	**26.2** 1.031	**25.7** 1.012	**17.0** 0.669
13	11/16-24	**24.5** 0.965	**13.1** 0.516	**17.6** 0.693	**18.6** 0.732	**29.2** 1.150	**27.2** 1.071	**18.0** 0.709
15	13/16-20	**27.8** 1.094	**16.2** 0.638	**18.5** 0.728	**19.5** 0.768	**32.2** 1.268	**28.7** 1.130	**20.0** 0.787
17	15/16-20	**30.8** 1.213	**19.3** 0.760	**20.2** 0.795	**20.3** 0.799	**35.7** 1.406	**30.4** 1.197	**21.5** 0.846
19	1-1/16-18	**34.1** 1.343	**22.3** 0.878	**19.6** 0.772	**20.8** 0.819	**39.7** 1.563	**32.0** 1.260	**23.0** 0.906
21	1-3/16-18	**37.3** 1.469	**25.8** 1.016	**20.4** 0.803	**21.7** 0.854	**42.2** 1.661	**33.6** 1.323	**25.0** 0.984
23	1-5/16-18	**41.0** 1.614	**28.3** 1.114	**20.8** 0.819	**22.0** 0.866	**45.2** 1.780	**35.1** 1.382	**26.0** 1.024
25	1-7/16-18	**43.7** 1.720	**31.5** 1.240	**21.7** 0.854	**22.9** 0.902	**48.2** 1.898	**36.6** 1.441	**28.0** 1.102

Millimeters Inches

POLAMCO 70 Series Memory Ring Adapters

70H Series for 38999 Series III and IV

Shell Size	A Thread	ØB Max.	ØT Min.	C Max.	D ±0.5 (0.020)	E Max.	F Max.	K ±0.5 (0.020)
09	M12 x 1.0	**18.0** 0.709	**6.7** 0.264	**13.1** 0.516	**17.1** 0.673	**25.7** 1.012	**24.0** 0.945	**17.5** 0.689
11	M15 x 1.0	**21.0** 0.827	**10.2** 0.402	**13.9** 0.547	**18.2** 0.717	**26.7** 1.051	**25.7** 1.012	**17.5** 0.689
13	M18 x 1.0	**24.5** 0.965	**13.5** 0.531	**14.5** 0.571	**18.6** 0.732	**31.2** 1.228	**27.2** 1.071	**20.0** 0.787
15	M22 x 1.0	**29.0** 1.142	**16.2** 0.638	**15.5** 0.610	**19.5** 0.768	**37.2** 1.465	**28.7** 1.130	**24.5** 0.965
17	M25 x 1.0	**32.5** 1.280	**19.4** 0.764	**16.1** 0.634	**20.3** 0.799	**40.2** 1.583	**30.4** 1.197	**26.7** 1.051
19	M28 x 1.0	**35.5** 1.398	**21.8** 0.858	**16.8** 0.661	**20.8** 0.819	**44.7** 1.760	**32.0** 1.260	**27.0** 1.063
21	M31 x 1.0	**37.0** 1.457	**25.1** 0.988	**17.1** 0.673	**21.7** 0.854	**49.2** 1.937	**33.6** 1.323	**30.5** 1.201
23	M34 x 1.0	**40.0** 1.575	**28.2** 1.110	**17.7** 0.697	**22.0** 0.866	**51.7** 2.035	**35.1** 1.382	**31.5** 1.240
25	M37 x 1.0	**43.5** 1.713	**31.4** 1.236	**18.4** 0.724	**22.9** 0.902	**53.2** 2.094	**36.6** 1.441	**28.5** 1.122

Millimeters Inches

Entry Size Dimensions

Entry Size	ØG Min.	ØH Max.	No. Of Optional Slots
03	**4.7** 0.185	**13.9** 0.547	1
04	**6.3** 0.248	**13.9** 0.547	1
05	**7.9** 0.311	**15.5** 0.610	1
06	**9.5** 0.374	**17.2** 0.677	2
07	**11.1** 0.437	**18.7** 0.736	2
08	**12.7** 0.500	**20.3** 0.799	2
09	**14.2** 0.559	**21.9** 0.862	2
10	**15.8** 0.622	**23.5** 0.925	2
11	**17.4** 0.685	**25.1** 0.988	2
12	**19.0** 0.748	**26.7** 1.051	2
13	**20.6** 0.811	**28.3** 1.114	2

Millimeters Inches

Entry Size	ØG Min.	ØH Max.	No. Of Optional Slots
14	**22.2** 0.874	**29.9** 1.177	4
15	**23.8** 0.937	**31.5** 1.240	4
16	**25.4** 1.000	**33.1** 1.303	4
17	**27.0** 1.063	**34.7** 1.366	4
18	**28.6** 1.126	**36.3** 1.429	4
19	**30.2** 1.189	**37.9** 1.492	4
20	**31.8** 1.252	**39.5** 1.555	4
21	**33.3** 1.311	**41.1** 1.618	4
22	**35.0** 1.378	**42.7** 1.681	4
23	**36.5** 1.437	**44.3** 1.744	4
24	**38.1** 1.500	**45.9** 1.807	4

Millimeters Inches

VERSATILE

- Interfaces with 38999 Series I, II, III and IV connectors
- Available in straight, 45°, and 90° angle mounting configurations
- Variety of finishes available

LIGHTWEIGHT

- Aluminum alloy saves weight
- Low-profile shield termination

HIGH RELIABILITY

- Constant force stainless steel spring enables fast, reliable termination

EASY TO USE

- Tool-free screen termination
- Variety of shell sizes available from stock
- Heat-shrink boot option available for strain relief and cable sealing

POLAMCO 91 Series Spring Adapters

The 91 Series adapters use a constant-force spring to help provide a fast, reliable shield termination without tools.

Part Numbering System

91 F 1 - 17 - 08 - 1 - C - SL - HE200

SERIES
91 Spring Adapter

CONNECTOR INTERFACE
F 38999 Series I and II
H 38999 Series III and IV

ANGLE
1 Straight
2 45°
3 90°

SHELL SIZE
09, 11, 13, 15, 17, 19, 21, 23, 25

ENTRY SIZE
See Entry Size Table

MATERIAL
1 Aluminum Alloy

FINISH
C Electroless Nickel
B Cadmium Olive Drab over Electroless Nickel
ZB Zinc Cobalt Olive Drab over Electroless Nickel
ZN Zinc Nickel Black Passivate over Electroless Nickel

SLOT OPTION
Omit For Standard (No Slot)
SL With Slots

SPRING REF
See Entry Size Table
Omit If No Spring Required
HE050, HE100, HE200, HE300, HE400

POLAMCO 91 Series Spring Adapters

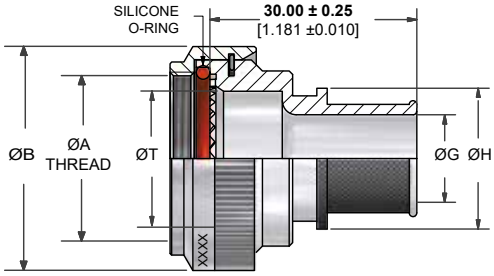

Angle 1: Straight

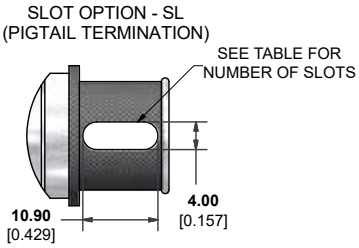

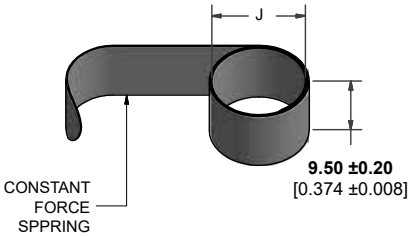

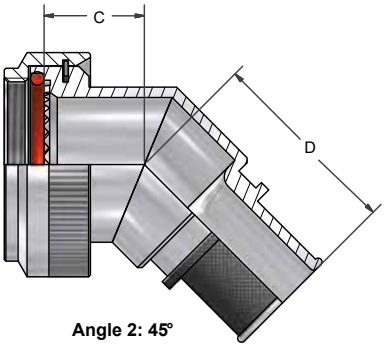

Angle 2: 45°

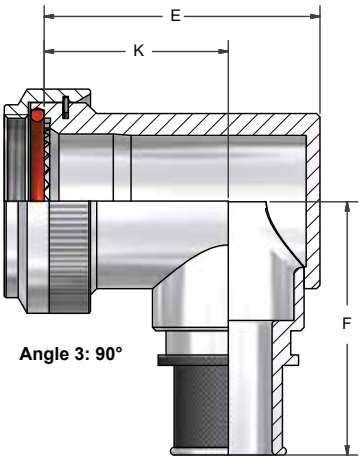

Angle 3: 90°

91F Series for 38999 Series I (Consult TE for Series II)

Shell Size	A Thread (UNEF)	ØB Max.	ØT Min.	C ±0.5 (0.020)	D Max.	E Max.	F Max.	K ±0.5 (0.020)
09	7/16-28	**18.0** 0.709	**6.8** 0.268	**16.4** 0.646	**25.7** 1.012	**22.7** 0.894	**30.5** 1.201	**15.0** 0.591
11	9/16-24	**21.0** 0.827	**10.2** 0.402	**17.2** 0.677	**26.9** 1.059	**26.2** 1.031	**32.2** 1.268	**17.0** 0.669
13	11/16-24	**24.5** 0.965	**13.1** 0.516	**17.6** 0.693	**27.3** 1.075	**29.2** 1.150	**33.7** 1.327	**18.0** 0.709
15	13/16-20	**27.8** 1.094	**16.2** 0.638	**18.5** 0.728	**28.2** 1.110	**32.2** 1.268	**35.2** 1.386	**20.0** 0.787
17	15/16-20	**30.8** 1.213	**19.3** 0.760	**19.2** 0.756	**29.0** 1.142	**35.7** 1.406	**36.9** 1.453	**21.5** 0.846
19	1-1/16-18	**34.1** 1.343	**22.3** 0.878	**19.6** 0.772	**29.3** 1.154	**39.7** 1.563	**38.5** 1.516	**23.0** 0.906
21	1-3/16-18	**37.3** 1.469	**25.8** 1.016	**20.4** 0.803	**30.1** 1.185	**42.2** 1.661	**41.1** 1.618	**25.0** 0.984
23	1-5/16-18	**41.0** 1.614	**28.3** 1.114	**20.8** 0.819	**30.5** 1.201	**45.2** 1.780	**41.6** 1.638	**26.0** 1.024
25	1-7/16-18	**43.7** 1.720	**31.5** 1.240	**21.7** 0.854	**31.4** 1.236	**48.2** 1.898	**43.1** 1.697	**28.0** 1.102

Millimeters Inches

POLAMCO 91 Series Spring Adapters

91H Series for 38999 Series III and IV

Shell Size	A Thread	ØB Max.	ØT Min.	C ±0.5 (0.020)	D Max.	E Max.	F Max.	K ±0.5 (0.020)
09	M12 x 1.0	**18.0** 0.709	**6.7** 0.264	**13.1** 0.516	**25.7** 1.012	**25.7** 1.012	**30.5** 1.201	**17.5** 0.689
11	M15 x 1.0	**21.0** 0.827	**10.2** 0.402	**13.9** 0.547	**26.9** 1.059	**26.7** 1.051	**32.2** 1.268	**17.5** 0.689
13	M18 x 1.0	**24.5** 0.965	**13.5** 0.531	**14.5** 0.571	**27.3** 1.075	**31.2** 1.228	**33.7** 1.327	**20.0** 0.787
15	M22 x 1.0	**29.0** 1.142	**16.2** 0.638	**15.5** 0.610	**28.2** 1.110	**37.2** 1.465	**35.2** 1.386	**24.5** 0.965
17	M25 x 1.0	**32.5** 1.280	**19.4** 0.764	**16.1** 0.634	**29.0** 1.142	**40.2** 1.583	**36.9** 1.453	**26.7** 1.051
19	M28 x 1.0	**35.5** 1.398	**21.8** 0.858	**16.8** 0.661	**29.3** 1.154	**44.7** 1.760	**38.5** 1.516	**27.0** 1.063
21	M31 x 1.0	**37.0** 1.457	**25.1** 0.988	**17.1** 0.673	**30.1** 1.185	**49.2** 1.937	**40.1** 1.579	**30.5** 1.201
23	M34 x 1.0	**40.0** 1.575	**28.2** 1.110	**17.7** 0.697	**30.5** 1.201	**51.7** 2.035	**41.6** 1.638	**31.5** 1.240
25	M37 x 1.0	**43.5** 1.713	**31.4** 1.236	**18.4** 0.724	**31.4** 1.236	**53.2** 2.094	**43.1** 1.697	**28.5** 1.122

Millimeters Inches

Entry Size Dimensions

Entry Size	ØG Min.	ØH Max.	No. Of Optional Slots	Spring Ref	J Max. (Uncon-strained)
03	**4.7** 0.185	**13.9** 0.547	1	HE050	**7.5** 0.295
04	**6.3** 0.248	**13.9** 0.547	1		
05	**7.9** 0.311	**15.5** 0.610	1	HE100	**9.1** 0.358
06	**9.5** 0.374	**17.2** 0.677	2		
07	**11.1** 0.437	**18.7** 0.736	2		
08	**12.7** 0.500	**20.3** 0.799	2	HE200	**12.8** 0.504
09	**14.2** 0.559	**21.9** 0.862	2		
10	**15.8** 0.622	**23.5** 0.925	2		
11	**17.4** 0.685	**25.1** 0.988	2		

Entry Size	ØG Min.	ØH Max.	No. Of Optional Slots	Spring Ref	J Max. (Uncon-strained)
12	**19.0** 0.748	**26.7** 1.051	2	HE300	**17.9** 0.705
13	**20.6** 0.811	**28.3** 1.114	2		
14	**22.2** 0.874	**29.9** 1.177	4		
15	**23.8** 0.937	**31.5** 1.240	4		
16	**25.4** 1.000	**33.1** 1.303	4		
17	**27.0** 1.063	**34.7** 1.366	4	HE400	**21.8** 0.858
18	**28.6** 1.126	**36.3** 1.429	4		
19	**30.2** 1.189	**37.9** 1.492	4		
20	**31.8** 1.252	**39.5** 1.555	4		
21	**33.3** 1.311	**41.1** 1.618	4		
22	**35.0** 1.378	**42.7** 1.681	4		
23	**36.5** 1.437	**44.3** 1.744	4		
24	**38.1** 1.500	**45.9** 1.807	4		

Millimeters Inches

SAVE WEIGHT

- Lightweight open-frame cable clamp
- Backshell machined from solid aluminum to help maximize strength and reliability

VERSATILE

- Interfaces with 38999 Series I, II, III and IV connectors
- Available in straight and 90° angle mounting configurations
- Variety of finishes available

POLAMCO 96 Series Strain Relief Adapters

The 96 Series adapters provide stain relief in an open-frame cable clamp. The backshell is machined from solid aluminum alloy to support strength, reliability, and low weight.

Part Numbering System

96 F 1 - 16 - 1 - C

SERIES
- **96** Strain Relief Adapter

CONNECTOR INTERFACE
- **F** 38999 Series I and II
- **H** 38999 Series III and IV

ANGLE
- **1** Straight
- **3** 90°

DASH NUMBER (SHELL SIZE)
08 (09), **10** (11), **12** (13), **14** (15),
16 (17), **18** (19), **20** (21), **22** (23), **24** (25)

MATERIAL
- **1** Aluminum Alloy

FINISH
- **C** Electroless Nickel
- **B** Cadmium Olive Drab over Electroless Nickel
- **G** Black Anodize, Sulphuric
- **ZB** Zinc Cobalt Olive Drab over Electroless Nickel
- **ZN** Zinc Nickel Black Passivate over Electroless Nickel

POLAMCO 96 Series Strain Relief Adapters

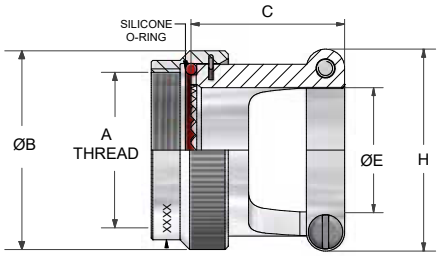

Angle 1: Straight

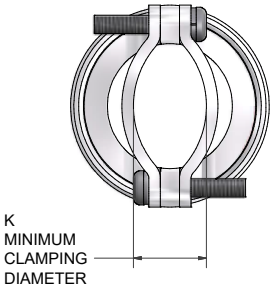

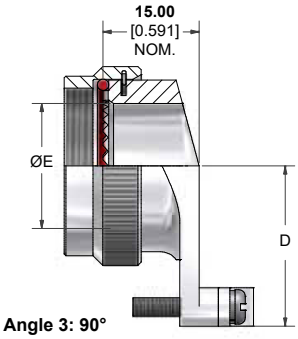

Angle 3: 90°

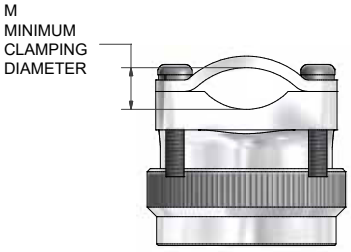

POLAMCO 96 Series Strain Relief Adapters

96F Series for 38999 Series I and II

Dash No.	Shell Size: Series I (Series II)	A Thread (UNEF)	ØB Max.	C Max.	D Max.	ØE Min.	H Max.	J Max.	K ±0.5 (0.020) Clamping Diameter	M ±0.5 (0.020) Clamping Diameter
08	09 (08)	7/16-28	**18.3** 0.720	**21.5** 0.846	**18.8** 0.740	**6.7** 0.264	**19.0** 0.748	**19.0** 0.748	**5.7** 0.224	**4.7** 0.185
10	11 (10)	9/16-24	**21.5** 0.846	**21.5** 0.846	**21.1** 0.831	**10.1** 0.398	**22.2** 0.874	**22.2** 0.874	**6.9** 0.272	**5.3** 0.209
12	13 (12)	11/16-24	**24.5** 0.965	**23.5** 0.925	**23.1** 0.909	**13.0** 0.512	**25.2** 0.992	**25.2** 0.992	**8.5** 0.335	**5.8** 0.228
14	15 (14)	13/16-20	**27.8** 1.094	**23.5** 0.925	**25.5** 1.004	**16.1** 0.634	**28.5** 1.122	**28.5** 1.122	**10.4** 0.409	**7.7** 0.303
16	17 (16)	15/16-20	**30.8** 1.213	**24.5** 0.965	**29.1** 1.146	**19.3** 0.760	**31.7** 1.248	**31.7** 1.248	**11.4** 0.449	**8.2** 0.323
18	19 (18)	1-1/16-18	**34.1** 1.343	**27.5** 1.083	**35.1** 1.382	**21.8** 0.858	**34.9** 1.374	**34.9** 1.374	**14.9** 0.587	**9.7** 0.382
20	21 (20)	1-3/16-18	**37.3** 1.469	**34.5** 1.358	**37.7** 1.484	**25.2** 0.992	**38.0** 1.496	**38.0** 1.496	**16.8** 0.661	**10.7** 0.421
22	23 (22)	1-5/16-18	**40.5** 1.594	**34.5** 1.358	**39.8** 1.567	**28.1** 1.106	**42.8** 1.685	**41.2** 1.622	**23.9** 0.941	**11.8** 0.465
24	25 (24)	1-7/16-18	**43.7** 1.720	**34.5** 1.358	**42.0** 1.654	**31.3** 1.232	**46.0** 1.811	**44.4** 1.740	**22.8** 0.898	**12.7** 0.500

Millimeters Inches

96H Series for 38999 Series III and IV

Shell Size	A Thread	ØB Max.	C Max.	D Max.	ØE Min.	H Max.	J Max.	K ±0.5 Clamping Diameter	M ±0.5 Clamping Diameter
09	M12 x 1.0	**18.0** 0.709	**21.5** 0.846	**20.4** 0.803	**6.7** 0.264	**19.0** 0.748	**20.6** 0.811	**5.7** 0.224	**5.2** 0.205
11	M15 x 1.0	**21.0** 0.827	**21.5** 0.846	**21.4** 0.843	**10.1** 0.398	**22.2** 0.874	**22.2** 0.874	**6.9** 0.272	**5.2** 0.205
13	M18 x 1.0	**24.5** 0.965	**23.5** 0.846	**22.4** 0.882	**13.0** 0.512	**25.2** 0.992	**23.7** 0.933	**8.5** 0.335	**5.6** 0.220
15	M22 x 1.0	**27.5** 1.083	**23.5** 0.925	**23.4** 0.921	**16.1** 0.634	**28.5** 1.122	**26.9** 1.059	**10.4** 0.409	**6.4** 0.252
17	M25 x 1.0	**31.0** 1.220	**24.5** 0.925	**25.4** 1.000	**19.3** 0.760	**31.7** 1.248	**28.5** 1.122	**11.4** 0.449	**6.5** 0.256
19	M28 x 1.0	**34.0** 1.339	**27.5** 0.965	**27.9** 1.098	**21.8** 0.858	**34.9** 1.374	**31.7** 1.248	**14.9** 0.587	**7.0** 0.276
21	M31 x 1.0	**37.0** 1.457	**34.5** 1.083	**31.9** 1.256	**25.2** 0.992	**38.0** 1.496	**34.9** 1.374	**16.8** 0.661	**8.5** 0.335
23	M34 x 1.0	**40.0** 1.575	**37.5** 1.358	**35.4** 1.394	**28.1** 1.106	**42.8** 1.685	**38.0** 1.496	**23.9** 0.941	**9.4** 0.370
25	M37 x 1.0	**43.5** 1.713	**37.5** 1.476	**36.4** 1.433	**31.3** 1.232	**46.0** 1.811	**38.0** 1.496	**22.8** 0.898	**9.4** 0.370

Millimeters Inches

HIGH PERFORMANCE

- Profile of backshell specifically designed to help optimize performance with heat shrink boot
- Optional heat-shrink boot available to help provide strain relief
- Alternative to M85049/62

VERSATILE

- Interfaces with 38999 Series I, II, III and IV connectors
- Available in straight, 45°, and 90° angle mounting configurations
- Variety of finishes available
- Standard range - many sizes available from stock

POLAMCO 97 Series Heat-Shrink Boot Adapters

The 97 Series adapters are designed to help provide high performance when used with an optional heat-shrink boot to provide strain relief. Many shell sizes are available from stock, providing an easy alternative to M85049/62 backshells.

Part Numbering System

97 F 1 - 17 - 1 - C

SERIES
- **97** Heat-Shrink Boot Adapter

CONNECTOR INTERFACE
- **F** 38999 Series I and II
- **H** 38999 Series III and IV

ANGLE
- **1** Straight
- **2** 45°
- **3** 90°

SHELL SIZE
- **09, 11, 13, 15, 17, 19, 21, 23, 25**

ENTRY SIZE
- See Entry Size Table

MATERIAL
- **1** Aluminum Alloy

FINISH
- **C** Electroless Nickel
- **B** Cadmium Olive Drab over Electroless Nickel
- **G** Black Anodize, Sulphuric
- **ZB** Zinc Cobalt Olive Drab over Electroless Nickel
- **ZN** Zinc Nickel Black Passivate over Electroless Nickel

POLAMCO 97 Series Heat-Shrink Boot Adapters

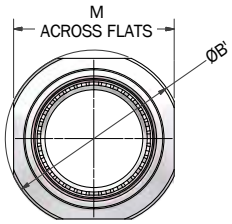

-FN OPTION

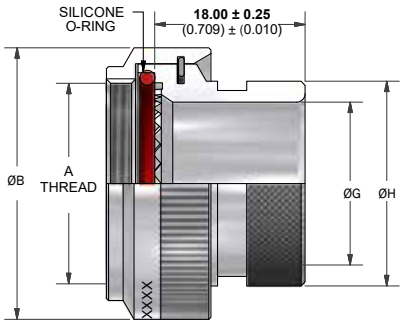

Angle 1: Straight

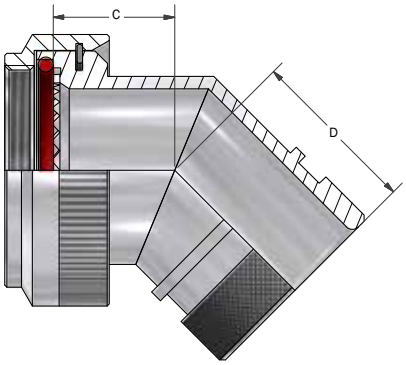

Angle 2: 45°

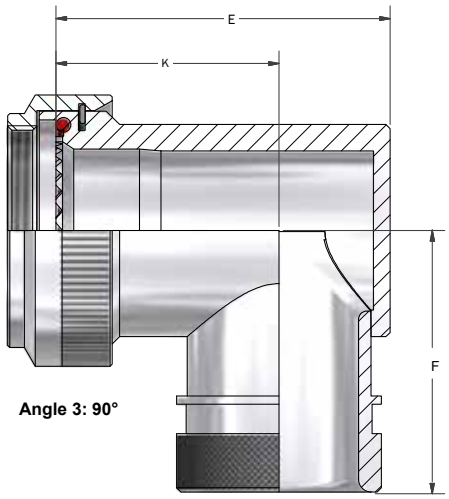

Angle 3: 90°

97F Series for 38999 Series I (Consult TE for Series II)

Shell Size	A Thread	ØB Max.	ØG Max.	ØH Max.	C ±0.5	D Max.	E Max.	F Max.	K ±0.5 (0.020)	Recommended Boot Size
09	7/16-28	**18.0** 0.709	**6.8** 0.268	**13.5** 0.531	**16.4** 0.646	**17.6** 0.693	**22.7** 0.894	**25.5** 1.004	**15.0** 0.591	202K121
11	9/16-24	**21.0** 0.827	**10.2** 0.402	**15.4** 0.606	**17.2** 0.677	**18.4** 0.724	**26.2** 1.031	**27.3** 1.075	**17.0** 0.669	202K121
13	11/16-24	**24.5** 0.965	**13.1** 0.516	**19.7** 0.776	**17.6** 0.693	**19.3** 0.760	**29.2** 1.150	**28.7** 1.130	**18.0** 0.709	202K142
15	13/16-20	**27.8** 1.094	**16.2** 0.638	**21.3** 0.839	**18.5** 0.728	**19.6** 0.772	**32.2** 1.268	**30.2** 1.189	**20.0** 0.787	202K142
17	15/16-20	**30.8** 1.213	**19.3** 0.760	**24.5** 0.965	**19.2** 0.756	**20.4** 0.803	**35.7** 1.406	**31.9** 1.256	**21.5** 0.846	202K153
19	1-1/16-18	**34.1** 1.343	**22.3** 0.878	**26.5** 1.043	**19.6** 0.772	**20.8** 0.819	**39.7** 1.563	**33.5** 1.319	**23.0** 0.906	202K153
21	1-3/16-18	**37.3** 1.469	**25.8** 1.016	**31.0** 1.220	**20.4** 0.803	**21.6** 0.850	**42.2** 1.661	**35.1** 1.382	**25.0** 0.984	202K153
23	1-5/16-18	**41.0** 1.614	**28.3** 1.114	**34.4** 1.354	**20.8** 0.819	**22.5** 0.886	**45.2** 1.780	**36.7** 1.445	**26.0** 1.024	202K163
25	1-7/16-18	**43.7** 1.720	**31.5** 1.240	**36.6** 1.441	**21.7** 0.854	**22.9** 0.902	**48.2** 1.898	**38.1** 1.500	**28.0** 1.102	202K163

Millimeters Inches

POLAMCO 97 Series Heat-Shrink Boot Adapters

97H Series for 38999 Series III and IV

Shell Size	A Thread	ØB Max.	ØB' Max.	ØG Max.	ØH Max.	C ±0.5	D Max.	E Max.	F Max.	K ±0.5 (0.020)	Recommended Boot Size	M
09	M12 x 1.0	**18.0** 0.709	**20.30** 0.799	**6.8** 0.268	**13.5** 0.531	**13.1** 0.516	**17.6** 0.693	**25.7** 1.012	**25.5** 1.004	**17.5** 0.689	202K121	**17.00** 0.669
11	M15 x 1.0	**21.0** 0.827	**23.70** 0.933	**9.9** 0.390	**15.4** 0.606	**13.9** 0.547	**18.4** 0.724	**26.7** 1.051	**27.3** 1.075	**17.5** 0.689	202K121	**30.40** 1.197
13	M18 x 1.0	**24.5** 0.965	**27.15** 1.069	**13.6** 0.535	**19.7** 0.776	**14.5** 0.571	**19.3** 0.760	**31.2** 1.228	**28.7** 1.130	**20.0** 0.787	202K142	**23.85** 0.939
15	M22 x 1.0	**29.0** 1.142	**32.05** 1.262	**15.9** 0.626	**21.3** 0.839	**15.5** 0.610	**19.6** 0.772	**37.2** 1.465	**30.2** 1.189	**24.5** 0.965	202K142	**28.75** 1.132
17	M25 x 1.0	**32.5** 1.280	**35.35** 1.392	**18.9** 0.744	**24.5** 0.965	**16.1** 0.634	**20.4** 0.803	**40.2** 1.583	**31.9** 1.256	**26.7** 1.051	202K153	**32.05** 1.262
19	M28 x 1.0	**35.5** 1.398	**38.55** 1.518	**21.9** 0.862	**26.5** 1.043	**16.8** 0.661	**20.8** 0.819	**44.7** 1.760	**33.5** 1.319	**27.0** 1.063	202K153	**35.25** 1.388
21	M31 x 1.0	**37.0** 1.457	**39.85** 1.569	**25.2** 0.992	**31.0** 1.220	**17.1** 0.673	**21.6** 0.850	**49.2** 1.937	**35.1** 1.382	**30.5** 1.201	202K153	**36.55** 1.439
23	M34 x 1.0	**40.0** 1.575	**42.95** 1.691	**27.4** 1.079	**34.4** 1.354	**17.7** 0.697	**22.5** 0.886	**51.7** 2.035	**36.7** 1.445	**31.5** 1.240	202K163	**39.65** 1.561
25	M37 x 1.0	**43.5** 1.713	**46.12** 1.816	**30.4** 1.197	**36.6** 1.441	**18.4** 0.724	**22.9** 0.902	**53.2** 2.094	**38.1** 1.500	**28.5** 1.122	202K163	**42.82** 1.686

Millimeters Inches

Entry Size Dimensions

Entry Size	ØG Min.	ØH Max.	No. Of Optional Slots
03	**4.7** 0.185	**13.9** 0.547	1
04	**6.3** 0.248	**13.9** 0.547	1
05	**7.9** 0.311	**15.5** 0.610	1
06	**9.5** 0.374	**17.2** 0.677	2
07	**11.1** 0.437	**18.7** 0.736	2
08	**12.7** 0.500	**20.3** 0.799	2
09	**14.2** 0.559	**21.9** 0.862	2
10	**15.8** 0.622	**23.5** 0.925	2
11	**17.4** 0.685	**25.1** 0.988	2
12	**19.0** 0.748	**26.7** 1.051	2
13	**20.6** 0.811	**28.3** 1.114	2

Millimeters Inches

Entry Size	ØG Min.	ØH Max.	No. Of Optional Slots
14	**22.2** 0.874	**29.9** 1.177	4
15	**23.8** 0.937	**31.5** 1.240	4
16	**25.4** 1.000	**33.1** 1.303	4
17	**27.0** 1.063	**34.7** 1.366	4
18	**28.6** 1.126	**36.3** 1.429	4
19	**30.2** 1.189	**37.9** 1.492	4
20	**31.8** 1.252	**39.5** 1.555	4
21	**33.3** 1.311	**41.1** 1.618	4
22	**35.0** 1.378	**42.7** 1.681	4
23	**36.5** 1.437	**44.3** 1.744	4
24	**38.1** 1.500	**45.9** 1.807	4

Millimeters Inches

HIGH PERFORMANCE

- Mesh tape bundle creates windowless EMI barrier, even without overall screen braid
- 360° termination of multiple or individual screens
- Optional heat-shrink boot available for sealing and strain relief

EASY TO USE

- Tool-free termination
- Reworkable

KMA Series Mesh Tape Backshells

The KMA Series backshells are a mesh tape bundle system that creates a windowless EMI barrier, even without overall screen braid by using 360° termination of multiple individual screens.

Part Numbering System

KMA F 1 - 17 - 1 - C - S1 - HE

SERIES
- **KMA** Mesh Tape Backshell

CONNECTOR INTERFACE
- **F** 38999 Series I and II
- **H** 38999 Series III and IV

ANGLE
- **1** Straight
- **2** 45°
- **3** 90°

SHELL SIZE
- **09, 11, 13, 15, 17, 19, 21, 23, 25**

MATERIAL
- **1** Aluminum Alloy

FINISH
- **C** Electroless Nickel
- **B** Cadmium Olive Drab over Electroless Nickel
- **ZB** Zinc Cobalt Olive Drab over Electroless Nickel
- **ZN** Zinc Nickel Black Passivate over Electroless Nickel

SLOT OPTION
- **S1** 12 mm (0.472") Width
- **S2** 20 mm (0.787") Width

TERMINATION OPTION
- **HE** Constant-Force Spring
- Omit For Supplied Without Spring

KMA Series Mesh Tape Backshells

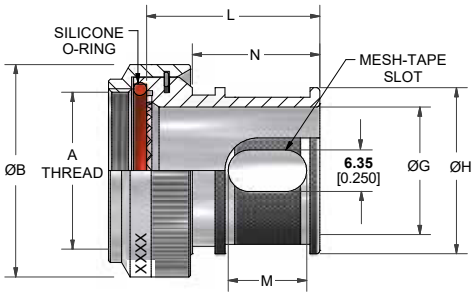

Angle A: Straight

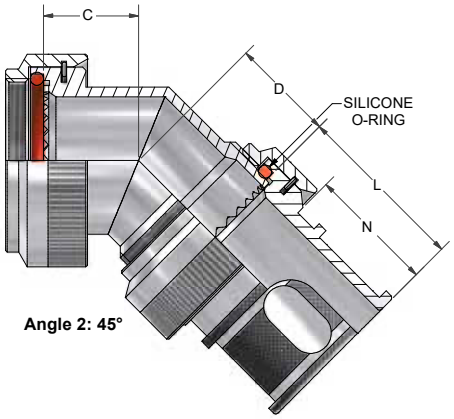

Angle 2: 45°

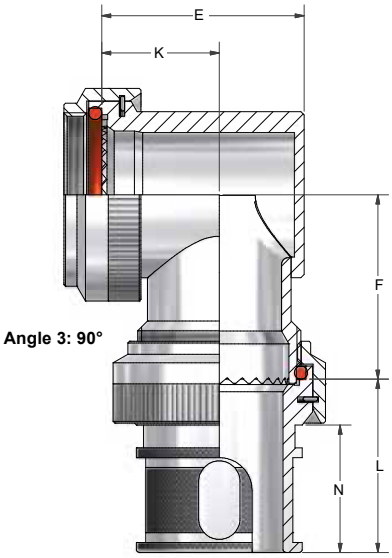

Angle 3: 90°

KMAF Series for 38999 Series I (Consult TE for Series II)

Shell Size	A Thread (UNEF)	ØB Max.	C Max.	D Max.	E Max.	F Max.	K ±0.5 (0.020)	ØG Min.	ØH Max.
09	7/16-28	**18.0** 0.709	**12.5** 0.492	**14.5** 0.571	**20.0** 0.787	**21.5** 0.846	**13.7** 0.539	**6.8** 0.268	**13.2** 0.520
11	9/16-24	**21.0** 0.827	**13.0** 0.512	**15.0** 0.591	**23.0** 0.906	**23.0** 0.906	**14.7** 0.579	**10.2** 0.402	**16.7** 0.657
13	11/16-24	**24.5** 0.965	**13.6** 0.535	**15.5** 0.610	**27.0** 1.063	**24.5** 0.965	**17.2** 0.677	**13.1** 0.516	**20.0** 0.787
15	13/16-20	**27.8** 1.094	**14.0** 0.551	**16.0** 0.630	**28.0** 1.102	**28.5** 1.122	**16.7** 0.657	**16.2** 0.638	**22.7** 0.894
17	15/16-20	**30.8** 1.213	**15.0** 0.591	**17.0** 0.669	**31.0** 1.220	**30.0** 1.181	**18.2** 0.717	**19.3** 0.760	**25.4** 1.000
19	1-1/16-18	**34.1** 1.343	**16.0** 0.630	**18.0** 0.709	**36.0** 1.417	**31.5** 1.240	**21.2** 0.835	**22.3** 0.878	**28.3** 1.114
21	1-3/16-18	**37.3** 1.469	**16.6** 0.654	**18.5** 0.728	**39.0** 1.535	**33.0** 1.299	**22.2** 0.874	**25.8** 1.016	**31.6** 1.244
23	1-5/16-18	**41.0** 1.614	**17.0** 0.669	**19.0** 0.748	**41.0** 1.614	**34.5** 1.358	**23.2** 0.913	**28.3** 1.114	**34.7** 1.366
25	1-7/16-18	**43.7** 1.720	**17.4** 0.685	**19.5** 0.768	**47.0** 1.850	**36.0** 1.417	**27.7** 1.091	**31.5** 1.240	**37.9** 1.492

Millimeters Inches

KMA Series Mesh Tape Backshells

KMAH Series for 38999 Series III and IV

Shell Size	A Thread	ØB Max.	C Max.	D Max.	E Max.	F Max.	K ±0.5 (0.020)	ØG Min.	ØH Max.
09	M12 x 1.0	**18.0** 0.709	**12.5** 0.492	**14.5** 0.571	**20.0** 0.787	**21.5** 0.846	**13.5** 0.531	**6.8** 0.268	**13.2** 0.520
11	M15 x 1.0	**21.0** 0.827	**13.0** 0.512	**15.0** 0.591	**23.0** 0.906	**23.0** 0.906	**14.5** 0.571	**10.3** 0.406	**16.7** 0.657
13	M18 x 1.0	**24.5** 0.965	**13.6** 0.535	**15.5** 0.610	**27.0** 1.063	**24.5** 0.965	**17.0** 0.669	**13.6** 0.535	**20.0** 0.787
15	M22 x 1.0	**29.0** 1.142	**14.0** 0.551	**16.0** 0.630	**28.0** 1.102	**28.5** 1.122	**16.5** 0.650	**16.3** 0.642	**22.7** 0.894
17	M25 x 1.0	**32.5** 1.280	**15.0** 0.591	**17.0** 0.669	**31.0** 1.220	**30.0** 1.181	**18.0** 0.709	**19.5** 0.768	**25.4** 1.000
19	M28 x 1.0	**35.5** 1.398	**16.0** 0.630	**18.0** 0.709	**36.0** 1.417	**31.5** 1.240	**21.0** 0.827	**21.9** 0.862	**28.3** 1.114
21	M31 x 1.0	**37.0** 1.457	**16.6** 0.654	**18.5** 0.728	**39.0** 1.535	**33.0** 1.299	**22.0** 0.866	**25.2** 0.992	**31.6** 1.244
23	M34x1.0	**40.0** 1.575	**17.0** 0.669	**19.0** 0.748	**41.0** 1.614	**34.5** 1.358	**23.0** 0.906	**28.3** 1.114	**34.7** 1.366
25	M37x1.0	**43.5** 1.713	**17.4** 0.685	**19.5** 0.768	**47.0** 1.850	**36.0** 1.417	**27.5** 1.083	**31.5** 1.240	**37.9** 1.492

Millimeters Inches

INDUSTRY STANDARD

- Meets AS85049 NAVAIR standards

RELIABLE

- Self-coupling locking nut provides excellent mechanical protection against loosening under vibration
- Corrosion resistant stainless steel

EASY TO USE

- Band straps available flat for side entry or precoiled for end entry
- Side-entry band straps allow easier installation and repair

VERSATILE

- Three band strap widths

Raychem AS85049 Band Straps

The AS85049 industry standard is used on most military circular connectors, including M38999. The band strap termination system provides ease of installation and repair. TE offers the corrosion-resisting steel bands in three styles to help meet your shield termination needs and termination tool of your choice.

APPLICATION TOOLING

- M85049/128-7 & 8 AS81306/1-02
- M85049/128-3 & 4 AS81306/1-01
- M85049/128-1 & 2 AS81306/2-01

Part Numbering System

M85049/128 - X

CONFIGURATION

1 Flat, 6.22 (0.245) Width
2 Precoiled, 6.22 (0.245) Width
3 Flat, 6.35 (0.250) Width
4 Precoiled, , 6.35 (0.250) Width
7 Flat, 3.05 (0.120) Width
8 Precoiled, 3.05 (0.120) Width

Raychem AS85049 Band Straps

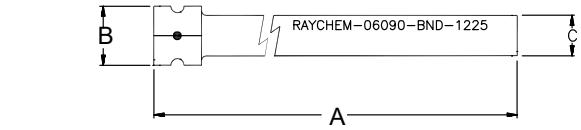

FIGURE 1
CONFIGURATION 1
FLAT

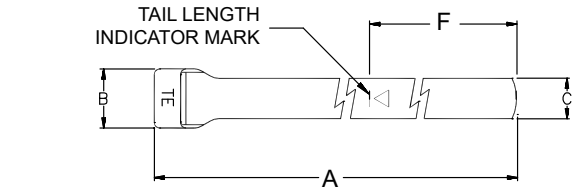

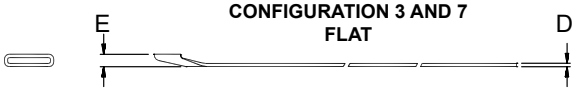

FIGURE 3
CONFIGURATION 3 AND 7
FLAT

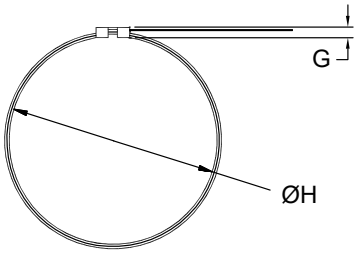

FIGURE 2
CONFIGURATION 2
PRECOILED

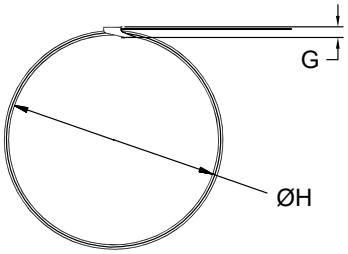

FIGURE 4
CONFIGURATION 4 AND 8
PRECOILED

Configurations and Dimensions

Configuration	Figure	A± 1.52 (.060)	B± 0.79 (.031)	C± 0.25 (.010)	D Ref.	E Ref.	F Ref.	G Max.	H Ref.
1	1	**355.6** 14.0	**8.33** 0.328	**6.22** 0.245	**0.48** 0.019	**2.54** 0.100	—	—	—
2	2	—	—	—	—	—	—	**3.56** 0.140	**44.46** 1.750
3	3	**362.10** 14.526	**8.89** 0.350	**6.35** 0.250	**0.51** 0.020	**3.30** 0.130	**51.59** 2.031	—	—
4	4	—	—	—	—	—	—	**3.81** 0.150	**44.45** 1.750
7	3	**206.38** 8.125	**4.95** 0.195	**3.05** 0.120	**0.38** 0.015	**1.35** 0.053	**51.59** 2.031	—	—
8	4	—	—	—	—	—	—	**1.85** 0.073	**21.8** 0.860

Millimeters Inches

INDUSTRY STANDARD

- Meets AS85049 NAVAIR standards
- Terminates a shielded cable

RELIABLE

- Detented self-locking coupling nut with audible click
- Sealed adapter-to-connector interface
- Accepts lipped heat-shrinkable boots

VERSATILE

- Straight, 45°, and 90° configurations
- Cadmium, electroless nickel, or black zinc nickel plating

APPLICATIONS

- Aerospace
- Marine
- Military Ground Vehicles
- Space-Based Systems

Raychem AS85049 Adapters and Bandstraps

Meeting NAVAIR requirements, Raychem AS85049 adapters help provide a reliable termination of shielded cables. The detented self-locking coupling nut helps provide mechanical protection against loosening under vibration and provides audible indication of proper engagement.

MATERIALS

- **Adapters:** Aluminum
- **Plating:** Olive drab cadmium, electroless nickel, or black zinc nickel

Part Numbering System

M85049/ 88 13 - 15 Z 02

PRODUCT DESIGNATOR
M85049 AS85049 Adapters

SPECIFICATION SHEET
D38999 Series I and II
85 Straight Adapter
86 90° Adapter
87 45° Adapter

D38999 Series I and II
88 Straight Adapter
89 90° Adapter
90 45° Adapter

CONFIGURATION
Use dash for detented self-locking
Omit otherwise

SHELL SIZE
09, 11, 13, 15, 17, 19, 21, 23, 25

FINISH
W Cadmium
N Nickel
Z Black Zinc Nickel

ENTRY SIZE
02 Small
03 Large

Raychem AS85049 Adapters and Bandstraps

Straight Adapters
AS85049/85 Adapters for 38999 Series I and II
AS85049/88 Adapters for 38999 Series III and IV

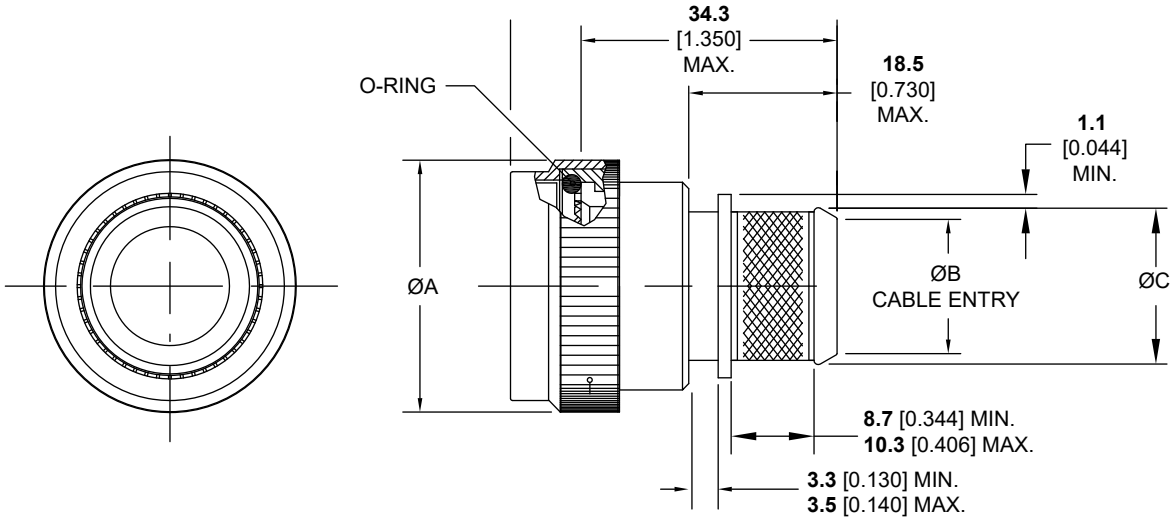

Shell Size		A Dia. Max.	B Dia. ±.010		C Dia. Ref	
			02	03	02	03
9	A	**21.8** 0.858	N/A	**6.4** 0.250	N/A	**10.0** 0.395
11	B	**25.0** 0.984	N/A	**7.9** 0.312	N/A	**11.6** 0.457
13	C	**29.4** 1.157	**7.9** 0.312	**11.1** 0.438	**11.6** 0.457	**14.8** 0.583
15	D	**32.5** 1.279	**11.1** 0.438	**14.3** 0.562	**14.8** 0.583	**18.0** 0.707
17	E	**35.7** 1.406	**12.7** 0.500	**15.9** 0.625	**16.4** 0.645	**19.6** 0.770
19	F	**38.5** 1.516	**15.9** 0.625	**19.1** 0.750	**19.6** 0.770	**22.7** 0.895
21	G	**41.7** 1.642	**15.9** 0.625	**20.6** 0.812	**19.6** 0.770	**24.3** 0.957
23	H	**44.9** 1.768	**17.5** 0.688	**23.8** 0.938	**21.1** 0.829	**27.5** 1.083
25	J	**48.0** 1.889	**19.1** 0.750	**25.4** 1.000	**22.7** 0.895	**29.1** 1.145

Millimeters Inches

Raychem AS85049 Adapters and Bandstraps

45° Adapters
AS85049/86 Adapters for 38999 Series I and II
AS85049/89 Adapters for 38999 Series III and IV

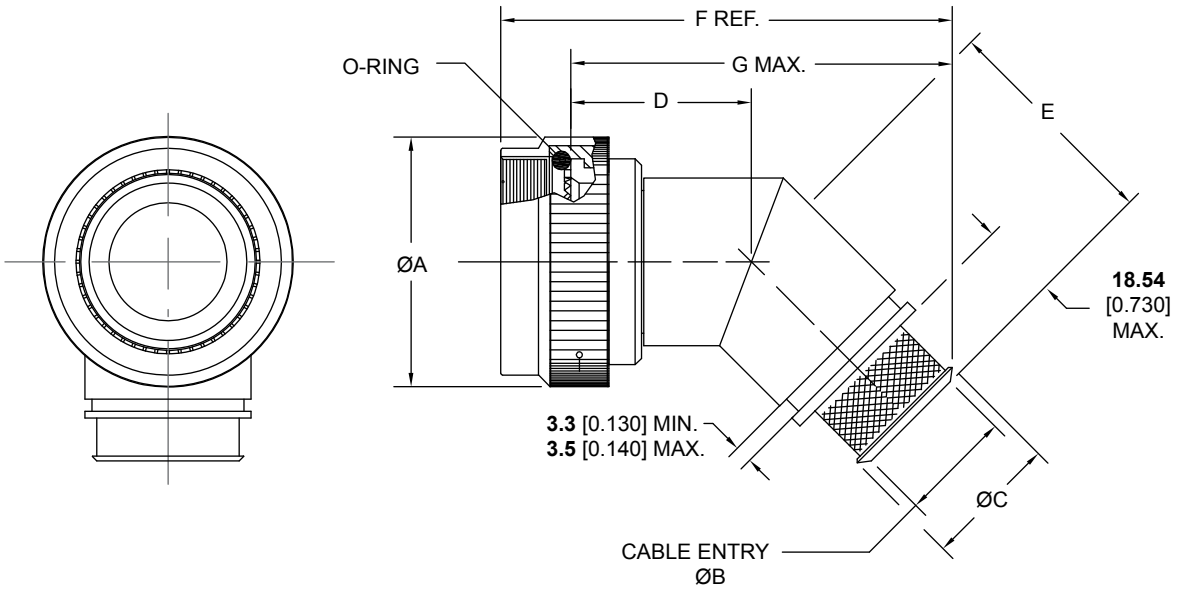

Shell Size		A Dia. Max.	B Dia. ±.010		C Dia. Ref		D	E	F Ref.		G Max.	
			02	03	02	03			02	03	02	03
9	A	**21.8** 0.858	N/A	**6.4** 0.250	N/A	**10.0** 0.395	**25.7** 1.01	**29.5** 1.16	N/A	**56.3** 2.22	N/A	**50.0** 1.97
11	B	**25.0** 0.984	N/A	**7.9** 0.312	N/A	**11.6** 0.457	**26.2** 1.03	**30.2** 1.19	N/A	**57.9** 2.28	N/A	**51.6** 2.03
13	C	**29.4** 1.157	**7.9** 0.312	**11.1** 0.438	**11.6** 0.457	**14.8** 0.583	**26.9** 1.06	**30.7** 1.21	**59.1** 2.33	**60.2** 2.37	**52.8** 2.08	**53.9** 2.12
15	D	**32.5** 1.279	**11.1** 0.438	**14.3** 0.562	**14.8** 0.583	**18.0** 0.707	**27.4** 1.08	**31.5** 1.24	**61.2** 2.41	**62.4** 2.46	**54.9** 2.16	**56.1** 2.21
17	E	**35.7** 1.406	**12.7** 0.500	**15.9** 0.625	**16.4** 0.645	**19.6** 0.770	**28.2** 1.11	**32.0** 1.26	**62.9** 2.48	**64.0** 2.52	**56.6** 2.23	**57.7** 2.27
19	F	**38.5** 1.516	**15.9** 0.625	**19.1** 0.750	**19.6** 0.770	**22.7** 0.895	**28.4** 1.12	**32.3** 1.27	**64.5** 2.54	**65.6** 2.58	**58.2** 2.29	**59.3** 2.33
21	G	**41.7** 1.642	**15.9** 0.625	**20.6** 0.812	**19.6** 0.770	**24.3** 0.957	**29.2** 1.15	**33.0** 1.30	**65.8** 2.59	**67.5** 2.66	**59.5** 2.34	**61.2** 2.41
23	H	**44.9** 1.768	**17.5** 0.688	**23.8** 0.938	**21.1** 0.829	**27.5** 1.083	**29.7** 1.17	**33.8** 1.33	**67.4** 2.65	**69.6** 2.74	**61.1** 2.40	**63.3** 2.49
25	J	48.0 1.889	**19.1** 0.750	**25.4** 1.000	**22.7** 0.895	**29.1** 1.145	**30.5** 1.20	**34.3** 1.35	**69.1** 2.72	**71.3** 2.81	**62.8** 2.47	**65.0** 2.56

Millimeters Inches

Raychem AS85049 Adapters and Bandstraps

90° Adapters
AS85049/87 Adapters for 38999 Series I and II
AS85049/90 Adapters for 38999 Series III and IV

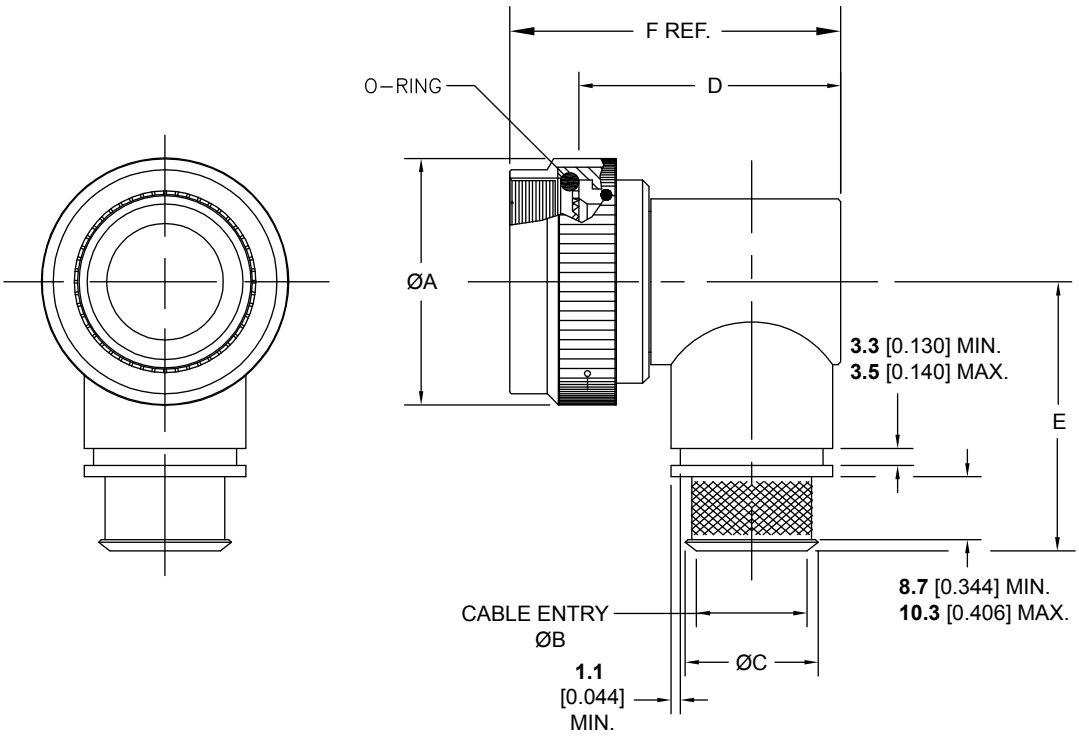

Shell Size		A Dia. Max.	B Dia. ±.010		C Dia. Ref		D	E	F Ref.
			02	03	02	03			
9	A	**21.8** 0.858	N/A	**6.4** 0.250	N/A	**10.0** 0.395	**34.9** 1.375	**36.0** 1.417	**41.2** 1.623
11	B	**25.0** 0.984	N/A	**7.9** 0.312	N/A	**11.6** 0.457	**36.5** 1.437	**37.6** 1.480	**42.8** 1.685
13	C	**29.4** 1.157	**7.9** 0.312	**11.1** 0.438	**11.6** 0.457	**14.8** 0.583	**39.7** 1.562	**39.4** 1.553	**46.0** 1.810
15	D	**32.5** 1.279	**11.1** 0.438	**14.3** 0.562	**14.8** 0.583	**18.0** 0.707	**42.8** 1.687	**41.0** 1.614	**49.1** 1.935
17	E	**35.7** 1.406	**12.7** 0.500	**15.9** 0.625	**16.4** 0.645	**19.6** 0.770	**44.4** 1.750	**42.6** 1.678	**50.8** 1.998
19	F	**38.5** 1.516	**15.9** 0.625	**19.1** 0.750	**19.6** 0.770	**22.7** 0.895	**47.6** 1.875	**45.0** 1.773	**53.9** 2.123
21	G	**41.7** 1.642	**15.9** 0.625	**20.6** 0.812	**19.6** 0.770	**24.3** 0.957	**49.2** 1.938	**45.6** 1.796	**55.5** 2.186
23	H	**44.9** 1.768	**17.5** 0.688	**23.8** 0.938	**21.1** 0.829	**27.5** 1.083	**52.4** 2.062	**47.2** 1.859	**58.7** 2.310
25	J	**48.0** 1.889	**19.1** 0.750	**25.4** 1.000	**22.7** 0.895	**29.1** 1.145	**54.0** 2.125	**48.7** 1.919	**60.3** 2.373

Millimeters Inches

Raychem AS85049 Adapters and Bandstraps

AS85049/128 Band Straps

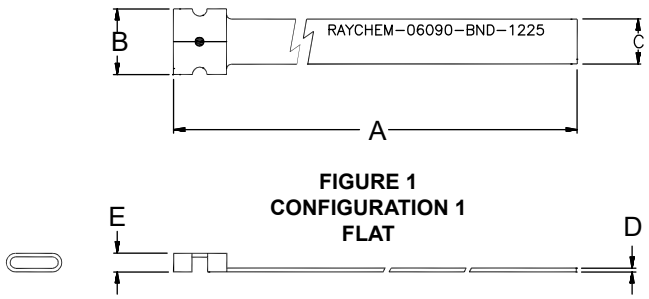

FIGURE 1
CONFIGURATION 1
FLAT

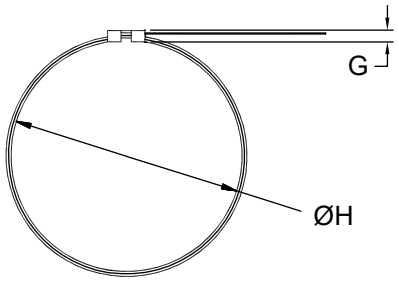

FIGURE 2
CONFIGURATION 2
PRECOILED

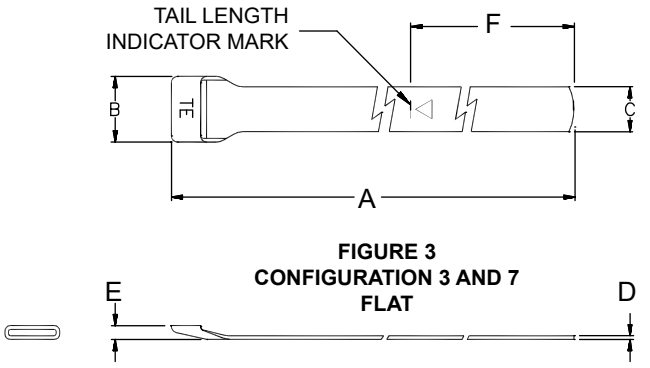

FIGURE 3
CONFIGURATION 3 AND 7
FLAT

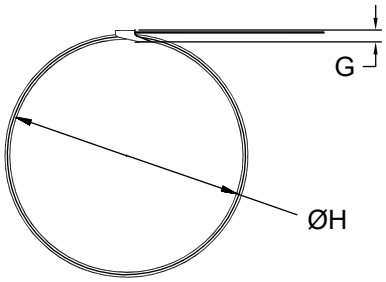

FIGURE 4
CONFIGURATION 4 AND 8
PRECOILED

HIGH PERFORMANCE

- Excellent EMC shielding performance
- Excellent mechanical and environmental resistance
- Provides strain relief on each individual cable

EASY TO USE

- One-piece assembly for simple installation
- Easy reentry
- Simplified maintenance and repair

VERSATILE

- Accommodates up to four shielded cables per ferrule
- Compact size for easy installation in confined areas
- Available for circular connectors in straight, 45°, and 90° assemblies, plus swept and long bodies.

APPLICATIONS

- Civilian and military aircraft
- Avionics
- Missiles and launch support systems
- Armored and military support vehicles
- Military ships (total shipboard hardening)
- Military communications
- Engines (FADEC harness hardening)

Raychem HexaShield EMC Adaptors

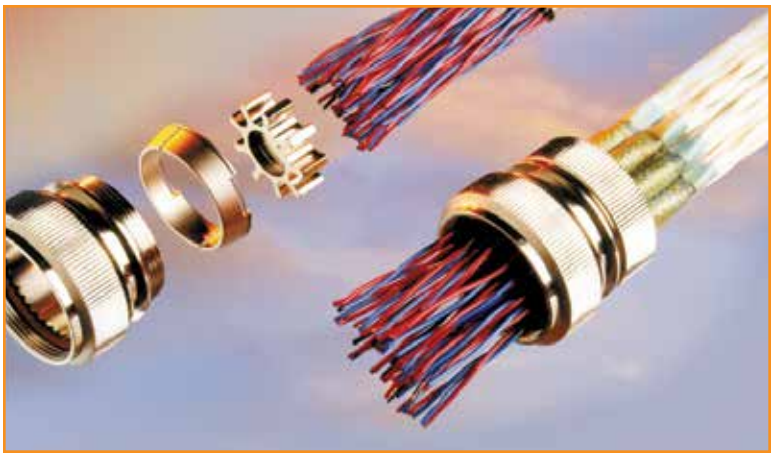

High-Performance EMC Protection for Harsh Military and Commercial Environments

Raychem HexaShield high-performance adaptors help provide excellent EMC protection and reliability in a variety of military and commercial applications.

Easy to install, maintain and repair, HexaShield adaptors help provide outstanding shielding effectiveness by providing 360-degree EMC shielding on the termination area of each individual cable. They are available for circular connectors in a variety of angles, plus swept and long body configurations.

HexaShield adaptors outperform traditional pigtail terminations, especially in HIRF application. They provide excellent EMC protection with minimal degradation of shielding performance. The adaptors also help provide excellent mechanical and environmental protection.

Specifications

MATERIALS

- **Shell:** Aluminum alloy
- **Platings:** Electroless nickel (MIL-DTL-26074) or olive drab cadmium (QQ-P-416 Type II, Class 3)

INSTALLATION PROCEDURES

- **RPIP-696-00:** HEX-A-02X and HET-A-04X
- **RPIP-696-03:** HET-03X

GENERAL PROCEDURES

- **RPIP-696-07:** Cylindrical connectors, right-angle body
- **RPIP-696-04:** Cylindrical connectors, straight body

Raychem HexaShield EMC Adaptors

HexaShield Adaptors for Circular Connectors

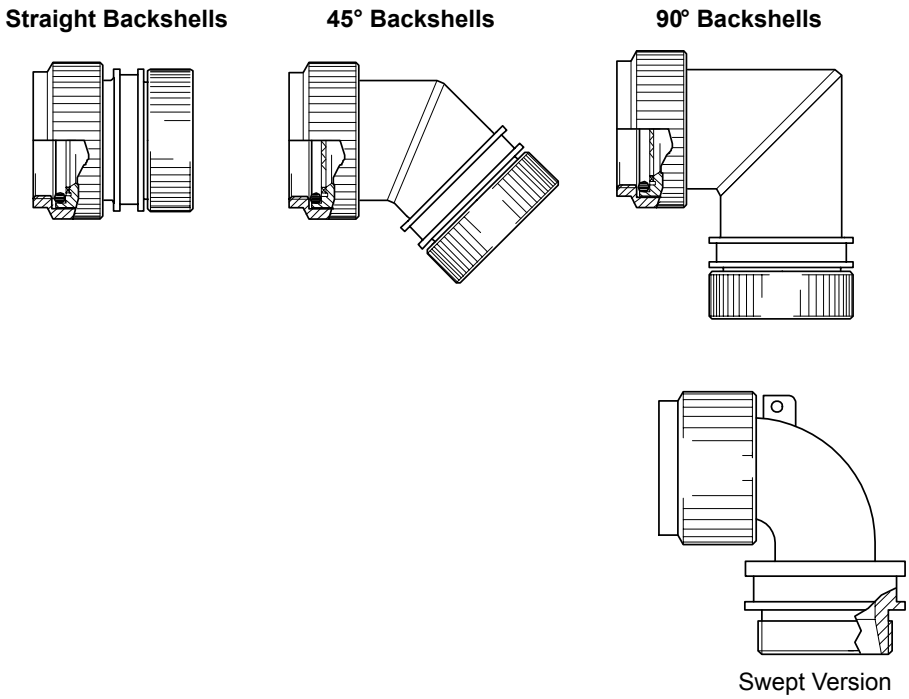

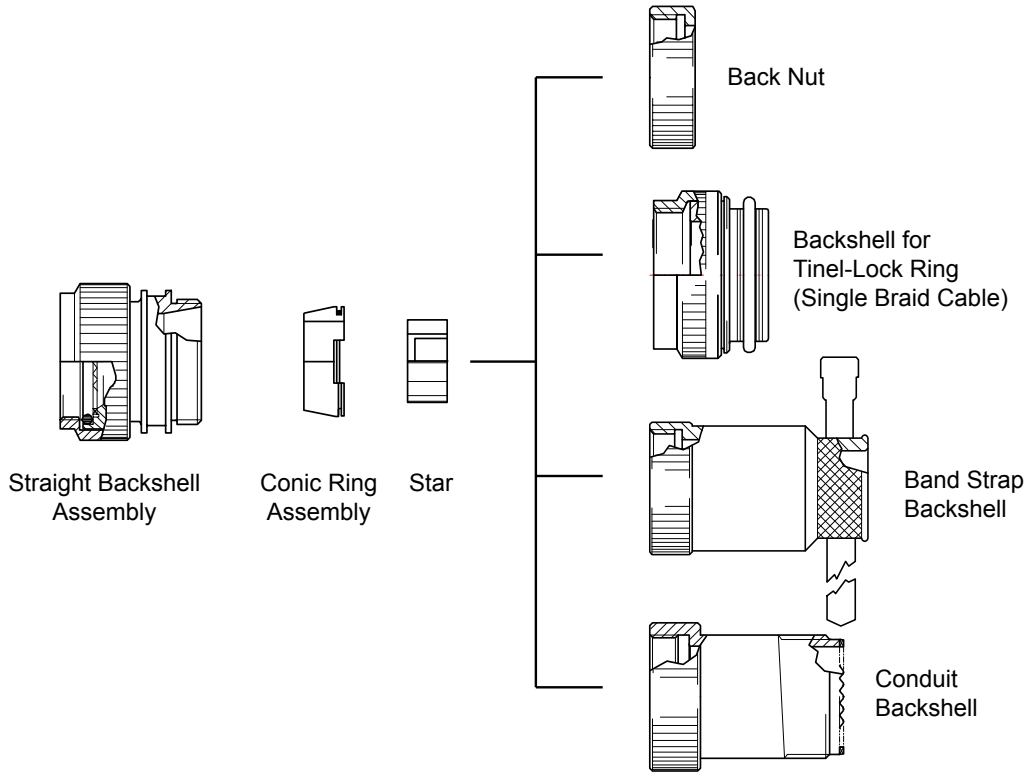

Raychem HexaShield EMC Adaptors

HexaShield Adaptor for Circular Connectors

Part Numbering System

HEXYY L - AY - 00 S - YY - AY - Y - DS

CONNECTOR CODE NUMBER
- **40** MIL-DTL-38999 Series 3 and 4
- **41** MIL-DTL-38999 Series 1 and 2

L Long Body (Optional)
See SCD for Availability

PLATING
- **B** Cadmium
- **C** Electroless Nickel

CONFIGURATION
- **00** Straight Body
- **45** 45-Degree Angle Body
- **90** 90-Degree Angle Body

S Swept Version

HEXASHIELD SIZE CODE
09, 11, 13, 15, 17, 19, 21, 23, 25

AXIMUM NUMBER OF FERRULES
See Applicable SCD for Availability

BACK NUT TYPE
- **1** Standard
- **2** Clamping Nut for Tinel Ring
- **3** Clamping Nut with Bandstrap
- **C** Clamping Nut for Conduit Applicator

DRILLED STAR
See Applicable SCD for Star Options

HexaShield Ferrule Kits

Use	Part No.	
	Cadmium Finish	Electroless Nickel Finish
Small-Size Cable with SolderShield Terminator	HET-A-02B	HET-A-02C
Ferrules with Heat-Shrinkable Tubing for Unshielded Cables	HET-A-03B	HET-A-03C
Large-Size Cable with SolderShield Terminator	HET-A-04B	HET-A-04C
Ferrule, Solid Blank for Use When HET-A Is Not Needed	HEX07-AB	HEX07-AC

Raychem HexaShield EMC Adaptors

Generalized System Performance
(Actual system performance
in any one test method may differ.)

Transfer Impedance

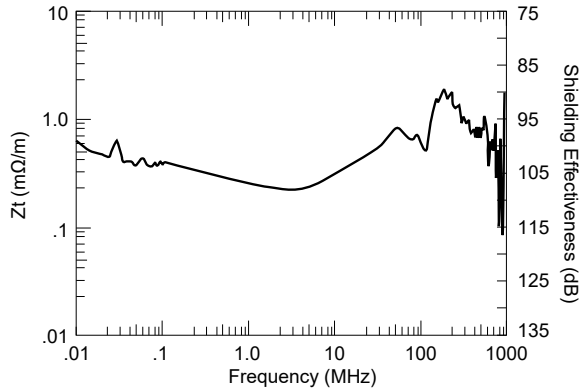

Protection Level

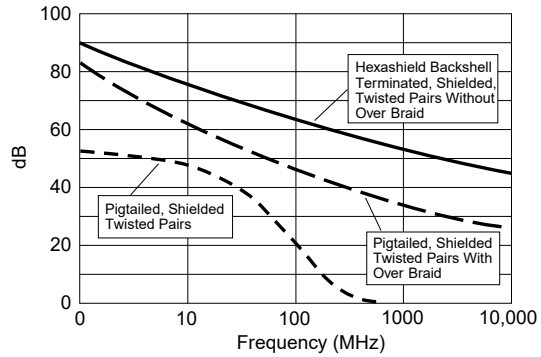

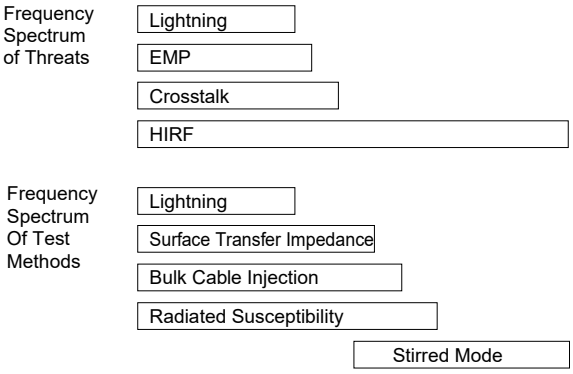

WEIGHT-SAVING DESIGN

- Lightweight composite materials
- Simple design helps to minimize amount of material
- Well suited to light-duty applications

SEALED

- Grommets provide sealing of individual wires

ACT00 Lightweight Composite Tie-Style Strain Relief Adapters

ACT00 strain relief adapters offer composite bodies to help provide a simple, lightweight strain relief for cable uses in light-duty application. Cable can be secured to the body adapter with a tie wrap. Body adapters are available with various conductive platings to help support grounding, while a secondary grommet provides wire sealing.

The adapters are available with inserts to match the insert arrangement of the connector on which it is used.

MATERIALS

- Coupling Nut and Body Adapter: Composite
- Body Adapter Finish: Nickel, tin, or olive drab cadmium
- Secondary Grommet: Silicone elastomer

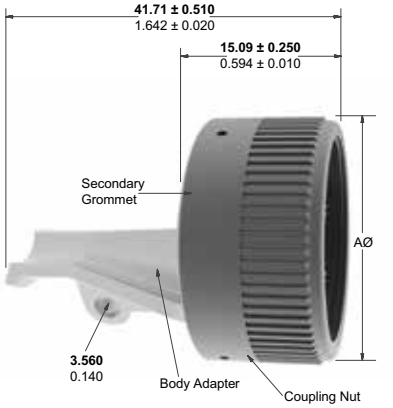

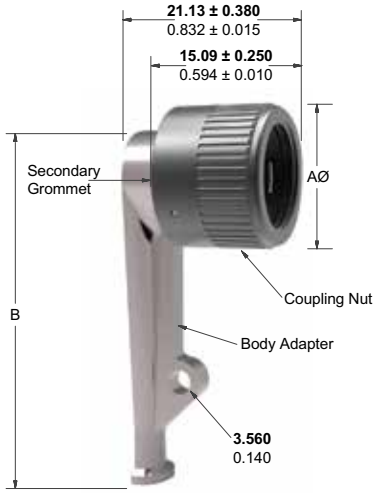

Shell Size	ØA ±0.15 (0.006)	B ±0.80 (0.031)	Strength Bending Moment, Min. (kg, lb.)
9 (A)	**0.650** 0.026	**1.948** 0.077	**11** 25
11 (B)	**0.775** 0.031	**2.010** 0.079	**11** 25
13 (C)	**0.905** 0.036	**2.075** 0.082	**11** 25
15 (D)	**1.030** 0.041	**2.135** 0.084	**22** 50
17 (E)	**1.160** 0.046	**2.198** 0.087	**22** 50
19 (F)	**1.270** 0.050	**2.258** 0.089	**22** 50
21 (G)	**1.400** 0.055	**2.320** 0.091	**34** 75
23 (H)	**1.525** 0.060	**2.383** 0.094	**34** 75
25 (J)	**1.655** 0.065	**2.445** 0.096	**45** 100

Millimeters Inches

ACT00 Lightweight Composite Tie-Style Strain Relief Adapters

Part Numbering System

ACT00 U B - A - EL 38 P

SERIES
ACT00

FINISH
- **A** Unplated Composite, Black
- **M** Nickel-Plated Body Adapter
- **R** Tin-Plated Body Adapter
- **W** Olive Drab Cadmium-Plated Body Adapter

CONFIGURATION

SHELL SIZE
A, B, C, D, E, F, G, H, J

TYPE
- **EL** Environmental, Straight, Light Duty
- **EN** Environmental, 90 Degree, Light Duty

CABLE INSERT ARRANGEMENT
- **00** No Insert Required
- See Cable Code Table

INSERT TYPE
- **P** Pin
- **S** Socket
- **N** No Insert Required

Cable Code Table: Use to Specify the Insert Arrangement

Cable Code	Insert Arrangement
38	09–35
39	09–98
40	11–05
41	11–35
42	11–99
43	13–04
44	13–35
45	13–98
46	15–05
47	15–18
48	15–35
49	15–97
50	17–06
51	17–08
52	17–26

Cable Code	Insert Arrangement
53	17–35
54	19–11
55	19–32
56	19–35
57	21–11
58	21–16
59	21–35
60	21–41
61	23–21
62	23–35
63	23–53
64	23–55
65	25–04
66	25–19
67	25–20

Cable Code	Insert Arrangement
68	25–24
69	25–29
70	25–35
71	25–61
92	11–98
93	15–19
94	13–08
95	17–99
96	21–39
97	25–43
98	15–23
99	17–19
100	15–26

ACT00 Lightweight Composite Tie-Style Strain Relief Adapters

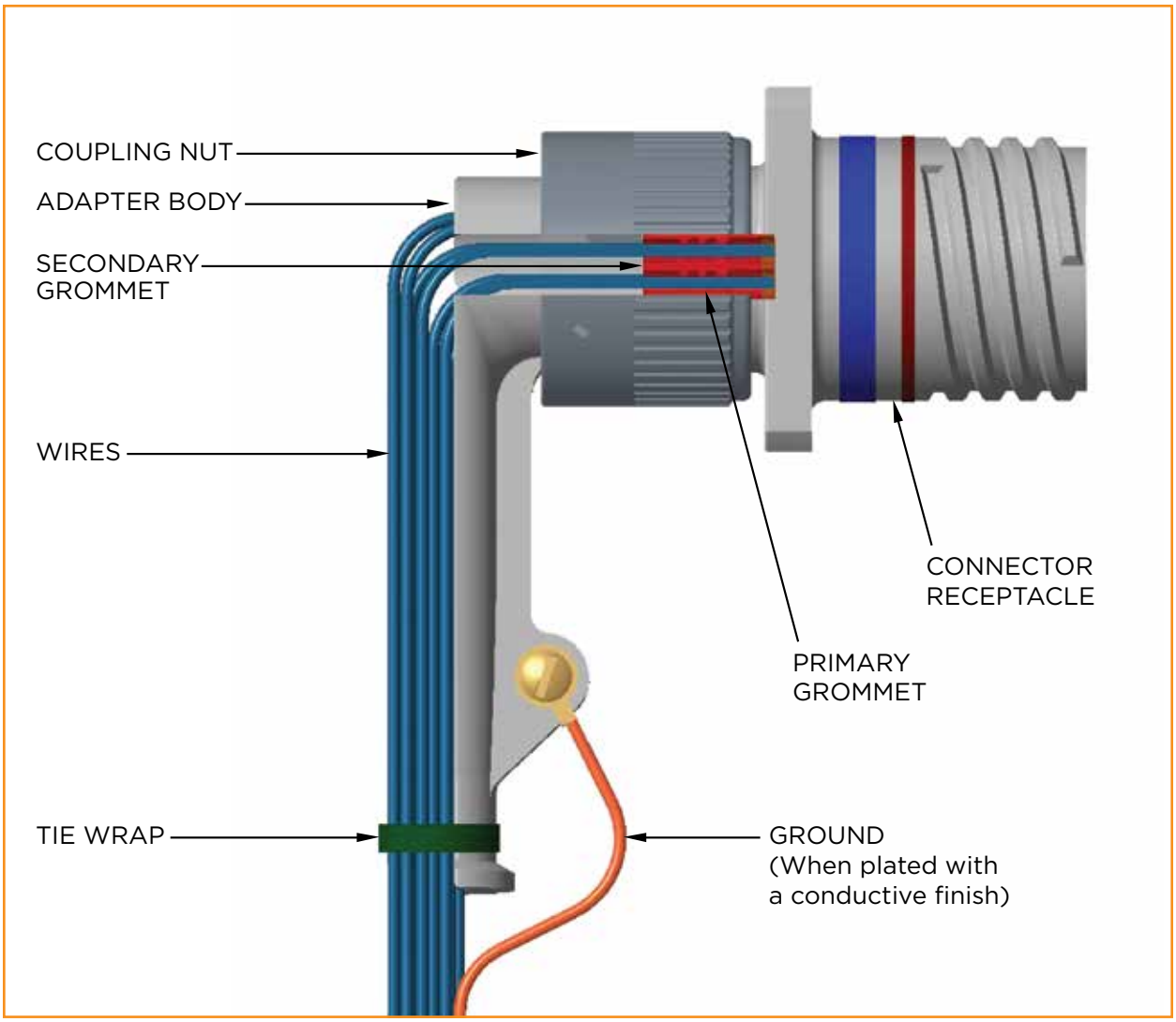

38999-Style Accessories

Metal Protective Covers

Series III
Plug Cap
(with attachment)

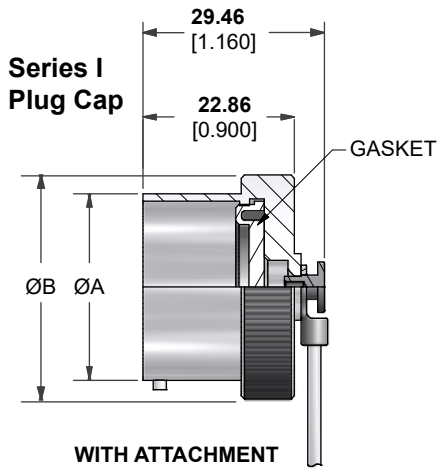

Shell Size	A Max.	B Max.
09	**14.56** 0.573	**20.83** 0.820
11	**17.81** 0.701	**23.88** 0.940
13	**21.62** 0.851	**27.18** 1.070
15	**24.84** 0.978	**30.23** 1.190
17	**28.02** 1.103	**33.53** 1.320
19	**30.73** 1.210	**36.58** 1.440
21	**33.91** 1.335	**39.88** 1.570
23	**37.08** 1.460	**42.92** 1.690
25	**40.26** 1.585	**46.23** 1.820

Millimeters Inches

Series I
Receptacle Cap
(with attachment)

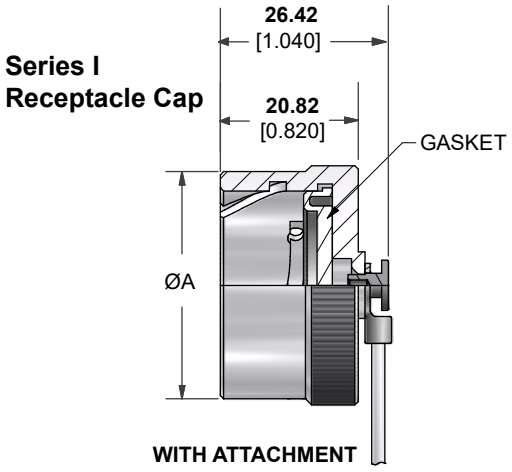

Shell Size	A Max.
09	**21.84** 0.860
11	**24.89** 0.980
13	**29.46** 1.160
15	**32.51** 1.280
17	**35.81** 1.410
19	**38.61** 1.520
21	**41.91** 1.650
23	**44.96** 1.770
25	**48.00** 1.890

Millimeters Inches

38999-Style Accessories

Metal Protective Covers

Series III
Plug Cap
(with attachment)

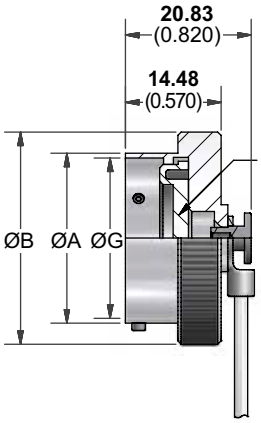

Shell Size	ØA +0.03/-0.13 (0.001/0.005)	ØB Max.	ØG Min.
08	**12.00** 0.472	**18.28** 0.720	**10.60** 0.417
10	**14.99** 0.590	**21.59** 0.850	**13.72** 0.540
12	**19.05** 0.750	**25.40** 1.000	**17.50** 0.689
14	**22.23** 0.875	**28.70** 1.130	**20.67** 0.814
16	**25.40** 1.000	**31.75** 1.250	**24.00** 0.945
18	**28.58** 1.125	**35.05** 1.380	**26.39** 1.039
20	**31.75** 1.250	**38.10** 1.500	**29.60** 1.165
22	**34.93** 1.375	**41.40** 1.630	**32.74** 1.289
24	**38.10** 1.500	**44.45** 1.750	**35.92** 1.414

Millimeters Inches

38999-Style Accessories

Metal Protective Covers

Series III
Plug Cap
(with attachment)

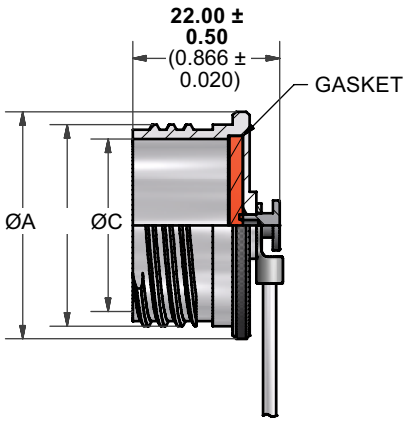

Shell Size	ØA Max.	ØC Min.
09	**21.0** 0.827	**12.6** 0.496
11	**24.5** 0.965	**15.8** 0.622
13	**28.0** 1.102	**19.4** 0.764
15	**30.0** 1.181	**22.6** 0.890
17	**34.0** 1.339	**25.8** 1.016
19	**37.0** 1.457	**28.6** 1.126
21	**40.0** 1.575	**31.8** 1.252
23	**43.0** 1.693	**34.8** 1.370
25	**47.0** 1.850	**38.1** 1.500

Millimeters Inches

Series III
Receptacle Cap
(with attachment)

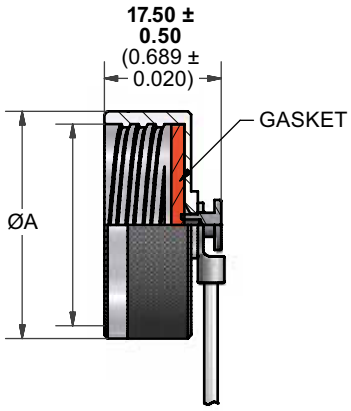

Shell Size	ØA Max.
09	**18.0** 0.709
11	**21.4** 0.843
13	**25.8** 1.016
15	**28.8** 1.134
17	**32.0** 1.260
19	**35.0** 1.378
21	**38.3** 1.508
23	**41.7** 1.642
25	**44.6** 1.756

Millimeters Inches

38999-Style Accessories

Metal Protective Covers

Series III
Anti-Decoupling Cap
(with attachment)

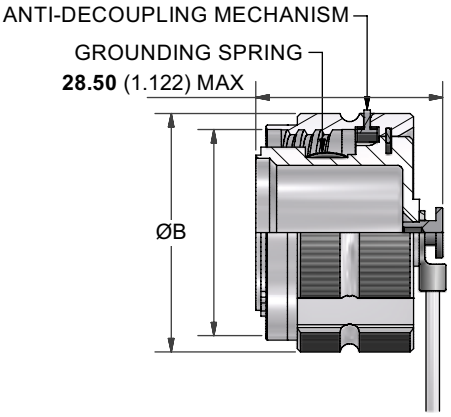

Shell Size	ØB Max.
09	**21.8** 0.858
11	**25.0** 0.984
13	**29.4** 1.157
15	**32.5** 1.280
17	**35.7** 1.406
19	**38.5** 1.516
21	**41.7** 1.642
23	**44.9** 1.768
25	**48.0** 1.890

Millimeters Inches

Series III
Anti-Tamper Cap
(with attachment)

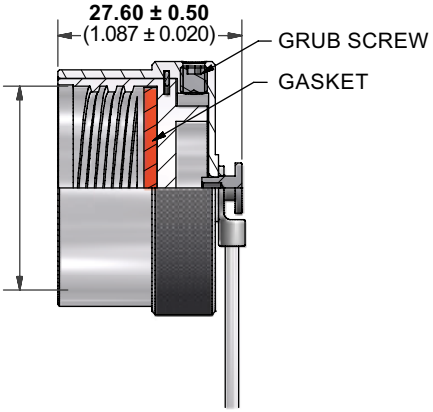

Shell Size	ØB Max.
09	**22.6** 0.890
11	**26.1** 1.028
13	**29.3** 1.154
15	**32.5** 1.280
17	**37.9** 1.492
19	**38.8** 1.528
21	**42.0** 1.654
23	**45.5** 1.791
25	**50.3** 1.980

Millimeters Inches

38999-Style Accessories

Metal Protective Covers

Series III
Arctic Grip Plug Cap
(with attachment)

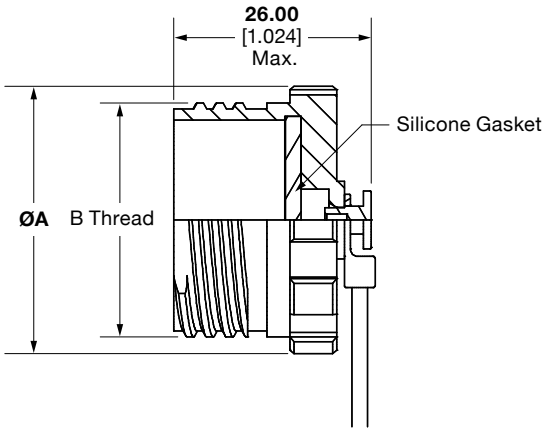

Shell Size	ØA Max.
09	**21.0** 0.827
11	**25.0** 0.984
13	**28.0** 1.102
15	**31.0** 1.220
17	**35.0** 1.378
19	**37.0** 1.457
21	**40.0** 1.575
23	**43.0** 1.693
25	**47.0** 1.850

Millimeters Inches

Series III
Arctic Grip Receptacle Cap
(with attachment)

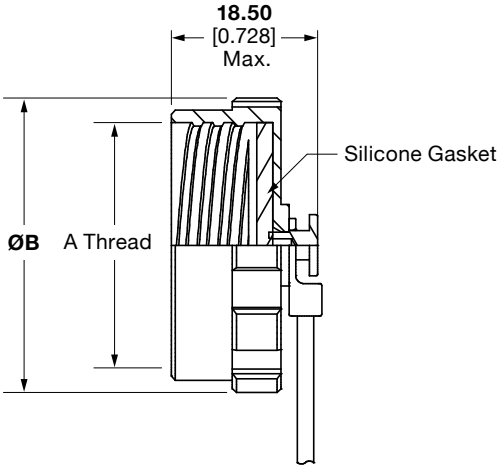

Shell Size	ØB Max.
09	**23.7** 0.933
11	**27.2** 1.071
13	**30.7** 1.209
15	**32.7** 1.287
17	**36.7** 1.445
19	**39.7** 1.563
21	**42.7** 1.681
23	**45.7** 1.799
25	**49.7** 1.957

Millimeters Inches

Metal Protective Covers for 38999 Series III

POLAMCO Protective Caps – Lanyard Options

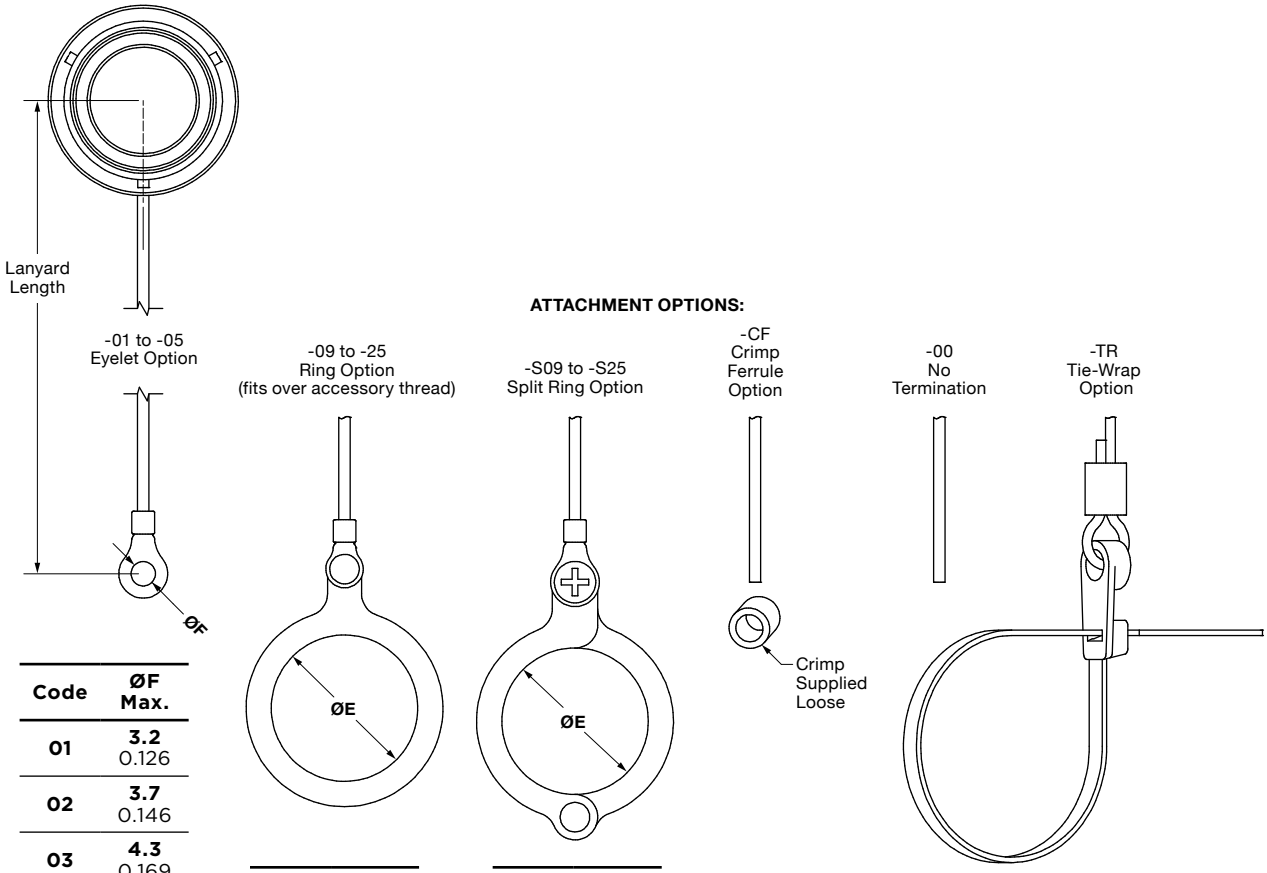

Code	ØF Max.
01	**3.2** 0.126
02	**3.7** 0.146
03	**4.3** 0.169
04	**5.3** 0.209
05	**6.4** 0.252

Millimeters Inches

Code	ØE Max.
09	**18.0** 0.709
11	**21.4** 0.843
13	**25.8** 1.016
15	**28.8** 1.134
17	**32.0** 1.260

Millimeters Inches

Code	ØE Max.
19	**35.0** 1.378
21	**38.3** 1.508
23	**41.7** 1.642
25	**44.6** 1.756

Millimeters Inches

RUGGED

- Helps protect connectors that are mated and unmated frequently
- Serves as an intermediary between plug and receptacle connector
- Available in MIL-DTL-38999 Series III and IV styles

VERSATILE

- One-piece connectors with plug and receptacle interfaces
- Choice of aluminum, stainless steel, or marine bronze shells
- Wide range of plating options

POLAMCO Connector Savers

38999-Style Series III and Series IV Connectors

POLAMCO Connector Savers help protect connectors that are mated and unmated frequently. The one-piece connectors use plug interface on one end and a receptacle interface on the other to allow them to serve as an intermediary between plug and receptacle connector. This helps allow the connector saver to take the wear and tear of repeated mating cycles. In particular, this helps allow box-mounted receptacles to be more protected from wear and the eventual need to be replaced.

POLAMCO connector savers are available in both MIL-DTL-38999 Series III and IV styles. Options include aluminum, stainless steel, or marine bronze shells with a wide range of plating options.

- **Shell Material:** Aluminum, stainless steel, or nickel aluminum bronze
- **Finish:** See part numbering description
- **Seals:** Silicone elastomer
- **Insert:** Thermoset plastic
- **Contacts:** Copper alloy, gold plated

POLAMCO Connector Savers

38999-Style Series III and Series IV Connectors

Series III Connector Saver

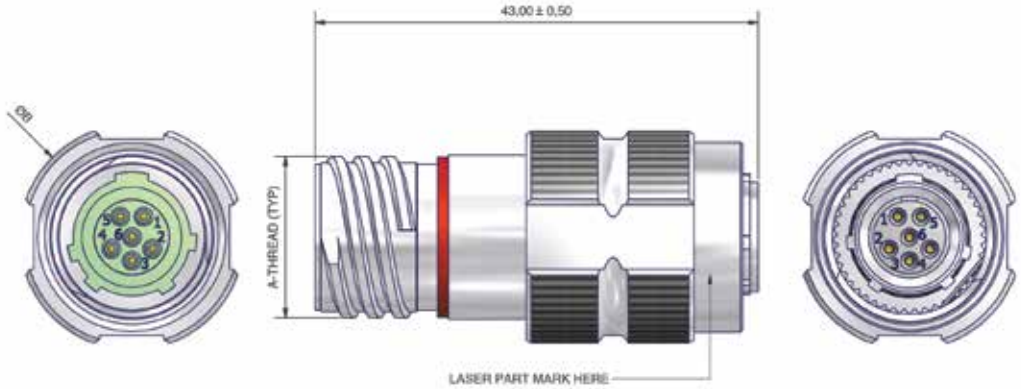

Series IV Connector Saver

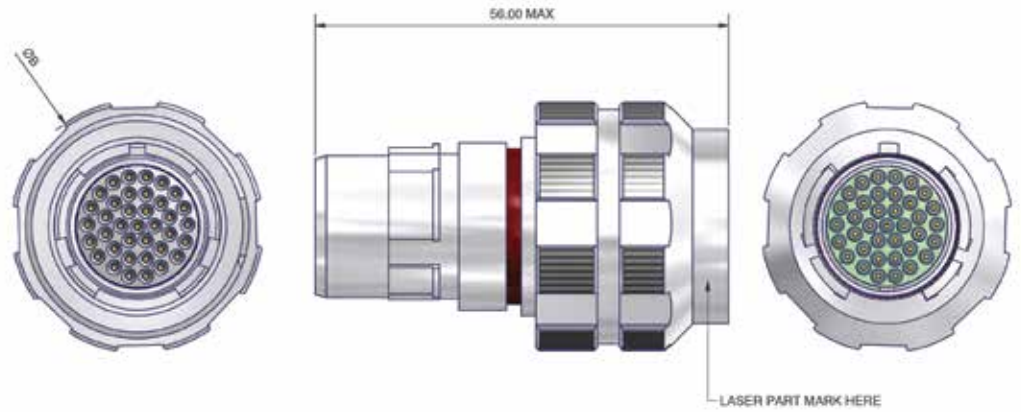

Shell Size	Ø B	
	Series III	Series IV
9	**21.8** 0.858	—
11	**25.0** 0.984	**26.6** 1.047
13	**29.4** 1.157	**31.0** 1.220
15	**32.5** 1.280	**34.2** 1.346
17	**35.7** 1.406	**37.4** 1.472
19	**38.5** 1.516	**40.2** 1.583
21	**41.7** 1.642	**43.3** 1.705
23	**44.9** 1.768	**46.5** 1.831
25	**48.0** 1.890	**49.7** 1.957

Millimeters Inches

POLAMCO Connector Savers

38999-Style Series III and Series IV Connectors

Part Numbering System

PC44CS - 15 35 - S N - 1-C

SERIES
- **PC43CS** Series III
- **PC44CS** Series IV

SHELL SIZE
- **9, 11, 13, 15, 17, 19, 21, 23, 25**

INSERT ARRANGEMENT

CONTACT RECEPTACLE END
- **P** Pin
- **S** Socket

KEYING
- **N, A, B, C, D, E**

MATERIAL/PLATING
- **1-C** Aluminum/Electroless Nickel
- **1-B** Aluminum/Cadmium Olive Drab over Electroless Nickel
- **1-ZB** Aluminum/Zinc Cobalt Olive Drab over Electroless Nickel
- **1-ZK** Aluminum/Zinc Cobalt Black over Electroless Nickel
- **1-ZN** Aluminum/Zinc Nickel Black Passivate Over Electroless Nickel
- **4-J** Stainless Steel/Passivate
- **2-Z** Nickel Aluminum Bronze/Shot Blast

SIMPLE, RELIABLE WIRE BUSSING

- Internal pc board connects contacts for grounding distribution and power distribution
- Range of standard and custom bussing configurations

WEIGHT AND SPACE SAVING

- Composite and aluminum shells
- Eliminates external bussing components
- Shell sizes 9 through 25

DEUTSCH CBC Series Circuit Board Connectors

38999 Series III Style Connectors with Bussed Contacts

DEUTSCH CBC connectors contain an internal printed circuit board used to bus contacts. A number of bussing arrangements are available. The lightweight connectors are available with either composite or aluminum shells. They offer an integrated solution for bussing needs by eliminating the need for external components.

Specifications

- **Current:** Traces and sockets carry current levels up to the threshold of a:
  MS22073-3 circuit breaker for contact size 22
  MS22073-5 circuit breaker for contact size 20
  MS22073-7.5 circuit breaker for contact size 16
- **Conformal Coating:** per MIL-I-46058 and able to withstand 100 VDC for two seconds
- **Insulation Resistance:** greater than 100 megohms when tested at 45 VDC
- **Applicable Specifications:**
  IPC-600C
  IPC 0-275
  MIL-P-55110
  MS22073
  MIL-I-46058
  MIL-STD-1560
- **Frequency:** maximum of 3200 Hz (analog circuit) and 100 kb/s (for ARINC 429 signals)
- **Circuit-to-Circuit Crosstalk Rejection:** minimum of 60 dB, nominal 80 dB
- **Temperature:** 125°C maximum continuous operating temperature for finished circuit board

DEUTSCH CBC Series Circuit Board Connectors

	CBC Connector Base Typical Part No.			
	59052	**59108**	**66363**	**59091**
Shell Sizes	13, 15, 19, 25	15	9, 11, 13, 15, 17, 19, 23, 25	25
Shell Material	Composite	Composite	Aluminum	Nickel-Plated Composite
Backpack Cover	Composite or Aluminum			Nickel-Plated Composite
Contacts	Copper Alloy			Copper Alloy
Contact Plating	DEUTSCH COAT V			Gold over Nickel
Resilient Inserts	Silicone Elastomers			
Plastic Inserts	Thermoplastic			

Dimensions

Shell Size	ØA Max.	ØB Max.
9	**21.79** 0.858	**18.29** 0.720
11	**24.99** 0.984	**21.21** 0.835
13	**29.39** 1.157	**24.21** 0.953
15	**32.49** 1.279	**28.19** 1.110
17	**35.69** 1.405	**31.19** 1.228
19	**38.48** 1.515	**34.21** 1.347
23	**44.91** 1.768	**40.21** 1.583
25	**47.98** 1.889	**43.18** 1.700

Millimeters Inches

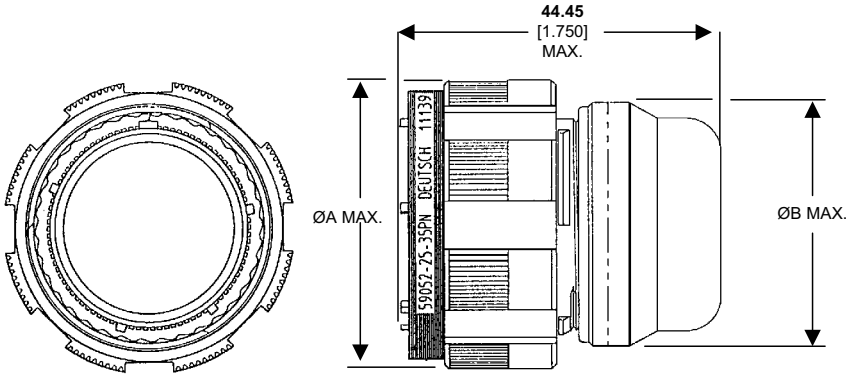

Part Numbering

See each product family for availability of different options.
Consult TE for configurations not shown here.

66363 W 11 A 35 P N

BASIC IDENTIFIER
59052 Composite Shell
59108 Composite Shell
66363 Aluminum Shell

PLATING
- (Dash) Nickel
W Olive Drab Cadmium

SHELL SIZE
09, 11, 13, 15, 17, 19, 23, 25

TRACE PATTERN
– (Dash), A, B, C, . . .

KEYING POSITION
N, A, B, C, D, or E

CONTACT
P Pin
S Socket

INSERT ARRANGEMENT
(See tables)

59052 Composite Plug

Insert Arrangement 13-98 Trace Pattern A Typical Part No. 59052-13A98PN	
Buss Size	**Contact Numbers**
2 Bussed Contacts	A, B C, F D, E
Spare	G, H, J, K

Insert Arrangement 13-98 Trace Pattern B Typical Part No. 59052-13B98PN	
Buss Size	**Contact Numbers**
2 Bussed Contacts	E, H F, G
3 Bussed Contacts	A, B, J
Spare	C, D, K

Insert Arrangement 19-32 Trace Pattern A Typical Part No. 59052-19A32SN	
Buss Size	**Contact Numbers**
3 Bussed Contacts	D, E, F
4 Bussed Contacts	U, V, W, X
5 Bussed Contacts	d, e, f, g, h
Spare	A, B, C, G, H J, K, L, M, N P, R, S, T, Y Z, a, b, c, j

Insert Arrangement 25-04 Trace Pattern C Typical Part No. 59052-25C04SA	
Buss Size	**Contact Numbers**
3 Bussed Contacts	M, N, P
4 Bussed Contacts	A, B, C, D DD, EE, FF, JJ
6 Bussed Contacts	E, F, G, J, K, L
Spare	H, R, S, T, U, V W, X, Y, Z, a, b c, d, e, l, g, h k, m, n, p, q, r s, l, u, v, w, x y, z, AA, BB, CC GG, HH, KK, LL

Insert Arrangement 25-35 Trace Pattern – (Dash) Typical Part No. 59052-25-35PN	
Buss Size	**Contact Numbers**
3 Bussed Contacts	1, 2, 3 4, 5, 6 8, 9, 10 11, 12, 13 14, 24, 35 23, 34, 46 47, 57, 58 59, 60, 61 62, 63, 64 65, 66, 67 68, 69, 70 80, 81, 93 92, 103, 113 104, 114, 121 115, 116, 117 118, 119, 120 122, 123, 124 125, 126, 127
4 Bussed Contacts	15, 16, 17, 18 19, 20, 21, 22 26, 27, 28, 29 30. 31, 32, 33 95, 96, 97, 98 99, 100, 101, 102 105, 106, 107, 108 109, 110, 111, 112
5 Bussed Contacts	25, 37, 38, 39, 40 41, 42, 43, 44, 45 36, 48, 49, 50, 51 52, 53, 54, 55, 56 82, 71, 72, 73, 74 75, 76, 77, 78, 79 94, 83, 84, 85, 86 87, 88, 89, 90, 91
Spare	7, 28

Insert Arrangement 25-61 Trace Pattern – (Dash) Typical Part No. 59052-25-61PN	
Buss Size	**Contact Numbers**
4 Bussed Contacts	G, H, g, h J, I, y, z P, m, CC, MM R, n, DD, EE S, T, U, V W, X, Y, I Z, u, HH, JJ a, v, w, x p, q, r, s
5 Bussed Contacts	A, B, C, D, E, b, c, d, e, f K, L, j, AA, KK M, N, k, BB, LL
Spare	F

59108 Composite Plug

Insert Arrangement 15-35 Trace Pattern C 59108-15C35PN Bussing Arrangements	
Buss Size	**Contact Numbers**
21 Bussed Contacts	1, 2, 3, 4, 5, 6, 7, 8, 9, 10, 11, 12, 13, 14, 15, 16, 17, 18, 32, 33, 34
15 Bussed Contacts	19, 20, 21, 22, 23, 24, 25, 26, 27, 28, 29, 30, 31, 36, 37
Spare	35

66363 Aluminum

Insert Arrangement 09-35 Trace Pattern A Typical Part No. 66363W09A35PA	
Buss Size	**Contact Numbers**
2 Bussed Contacts	1, 2 3, 4
Spare	5, 6

Insert Arrangement 09-35 Trace Pattern B Typical Part No. 66363W09B35PN	
Buss Size	**Contact Numbers**
2 Bussed Contacts	1, 2 3, 4
Spare	5, 6

Insert Arrangement 09-35 Trace Pattern C Typical Part No. 66363W09C35PN	
Buss Size	**Contact Numbers**
2 Bussed Contacts	5, 6
Spare	1, 2, 3, 4

Insert Arrangement 11-35 Trace Pattern A Typical Part No. 66363W11A35PN	
Buss Size	**Contact Numbers**
3 Bussed Contacts	1, 3, 6 2, 4, 5 9, 10, 11
Spare	7, 8, 12, 13

Insert Arrangement 11-35 Trace Pattern B Typical Part No. 66363W11B35PN	
Buss Size	**Contact Numbers**
3 Bussed Contacts	1, 6, 8 2, 5, 7
2 Bussed Contacts	9, 10 11, 12
Spare	3, 4, 13

Insert Arrangement 11-35 Trace Pattern C Typical Part No. 66363W11C35PN	
Buss Size	**Contact Numbers**
2 Bussed Contacts	3, 7 4, 8 6, 10 5, 9
Spare	1, 2, 11, 12, 13

Insert Arrangement 11-35 Trace Pattern D Typical Part No. 66363W11D35PN	
Buss Size	**Contact Numbers**
3 Bussed Contacts	1, 7, 9 2, 8, 19
Spare	3, 4, 5, 6, 11, 12, 13

Insert Arrangement 11-35 Trace Pattern E Typical Part No. 66363W11E35PN	
Buss Size	**Contact Numbers**
2 Bussed Contacts	4, 10 5, 9
Spare	1, 2, 3, 6, 7, 8, 11, 12, 13

66363 Aluminum (continued)

Insert Arrangement 11-35 Trace Pattern F Typical Part No. 66363W11F35PN	
Buss Size	**Contact Numbers**
2 Bussed Contacts	1, 10 2, 9 3, 8 4, 7 5, 6
Spare	11, 12, 13

Insert Arrangement 15-35 Trace Pattern A Typical Part No. 66363W15A35PN	
Buss Size	**Contact Numbers**
2 Bussed Contacts	1, 7 2, 11 3, 15
4 Bussed Contacts	4, 8, 12, 16 5, 9, 13, 17 6, 10, 14, 18
Spare	19 through 37

Insert Arrangement 15-35 Trace Pattern B Typical Part No.66363W15B35PN	
Buss Size	**Contact Numbers**
2 Bussed Contacts	4, 8, 12, 16 5, 9, 13, 17 6, 10, 14, 18
4 Bussed Contacts	4, 8, 12, 16 5, 9, 13, 17 6, 10, 14, 18
Spare	21 through 37

Insert Arrangement 17-35 Trace Pattern A Typical Part No. 66363W17A35PN	
Buss Size	**Contact Numbers**
2 Bussed Contacts	1, 33 5, 34 9, 35 13, 36 17, 37 21, 38 25, 39 29, 40
9 Bussed Contacts	2, 6, 10, 14, 18, 22, 26, 30, 41 3, 7, 11, 15, 19, 23, 27, 31, 42 4, 8, 12, 16, 20, 24, 28, 32, 43
Spare	44 through 55

Insert Arrangement 23-55 Trace Pattern A Typical Part No. 66363W23A55PN	
Buss Size	**Contact Numbers**
2 Bussed Contacts	D, V E, U F, T G, S H, R J, P K, N L, M w, z x, y
Spare	A, B, C, W, X, Y, Z, a, b, c, d, e, f, g, h, j, k, m, n, p. q, u, v, AA, BB, CC, DD, EE, FF, GG, HH, i, r, s, l, u

Insert Arrangement 23-55 Trace Pattern B Typical Part No. 66363W23B55PN	
Buss Size	**Contact Numbers**
2 Bussed Contacts	A, C M, d N, c S, b T, o P, Z R, Y U, X V, W e. p y, AA z, BB
Spare	B, D, E, F, G, H, J, K, L, q, n, r, h, u, w, x, CC, DD, FF, GG, HH, EE, m, s, k, l, j, v, f, g, i

Insert Arrangement 25-35 Trace Pattern A Typical Part No. 66363W25A35PN	
Buss Size	**Contact Numbers**
3 Bussed Contacts	54, 66, 77 55, 67, 78 61, 62, 63 72, 73, 74
4 Bussed Contacts	52, 64, 75, 87 53, 65, 76, 88
Spare	1 through 51, 56, 57, 58, 59, 60, 68, 69, 70, 71, 79 through 86, 89 through 128

Assembly Instructions

Contact Crimping

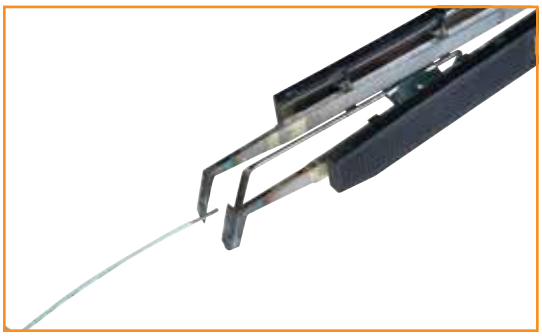

1 Burn through the insulation with a hot wire stripper or use other approved stripping method. Do not remove the insulation at this point. This will help protect the wire strands from splaying. Refer to contact information sheet for proper wire insulation strip length.

2 Set the dial of the crimp to the proper setting for wire gage and contact as noted on the contact information sheet or on the tool. Be sure that the proper locator is used. See contact information sheet for proper locator.

3 Drop the contact into the crimping tool with the contact crimp barrel facing up.

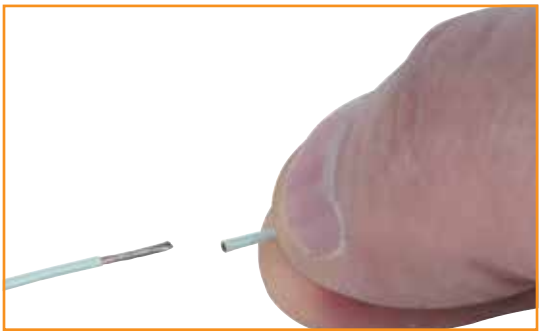

4 Remove the small piece of insulation from the wire. Do not pinch the insulation with the fingernails during this procedure. The wire is now ready to be crimped to the contact.

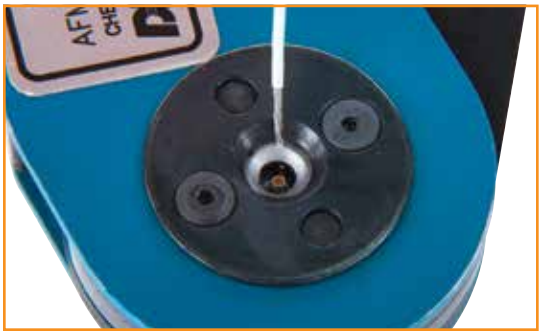

5 Insert the bare wire into the open end of the contact and squeeze the handles of the tool together. The crimping tool will not release until the full crimping cycle has been performed. Remove the crimped contact and wire from the tool.

6 Two series of 4 indents grip the wire and secure the contact to the wire. Visibility of the wire in the contact inspection hole (arrow) indicates that the wire is crimped into the contact at the proper depth. Inspect to make sure there are no loose or nicked strands.

Assembly Instructions

Contact Insertion

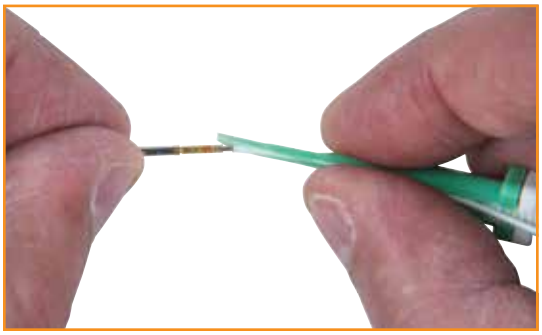

1 Hold the insertion half of the tool between the thumb and forefinger and lay the wire against the slot of the tool, then snap the wire into the slot.

2 After the wire snaps into the tool, seat the retention shoulder against the tip of the tool.

3 Holding the connector with the rear grommet facing you, slowly push the contact straight into the grommet cavity. Do not twist the tool. Note: Some wire constructions may not require the use of an insertion tool.

4 A firm stop will be evident when the contact positively seats in the connector. Remove the tool by sliding it back on the wire. The contact will now be securely locked in place.

Assembly Instructions

Contact Removal

1 With the rear of the connector facing you, lay the wire of the contact along the slot of the tool, leaving about 1/2" from the end of the tool to the rear of the connector. Squeeze the wire firmly into the tool between the thumb and forefinger about 1/2" from the tip and quickly pull the tool away from the connector.

2 The wire will now have snapped into place. Slide the tool down along the wire and into the rear cavity and slowly into the connector until a positive resistance is felt. At this time, the contact retaining mechanism is in the unlocked position.

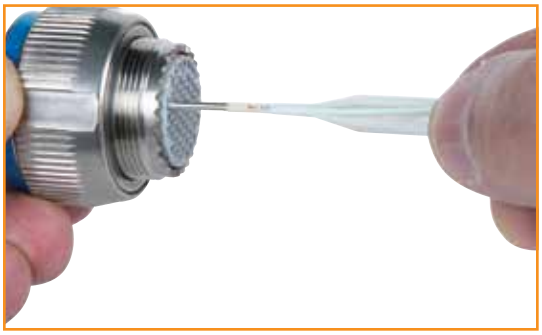

3 Press the wire of the contact against the serrations of the plastic tool and pull both the tool and the contact/wire assembly out of the connector.

Caution: When using minimum diameter wire, the tool may have a tendency to stop against the rear of the contact crimp barrel. If this should occur, careful manipulation of the tool will help permit it to ride over the crimp barrel and into the proper position to unlock the contact.

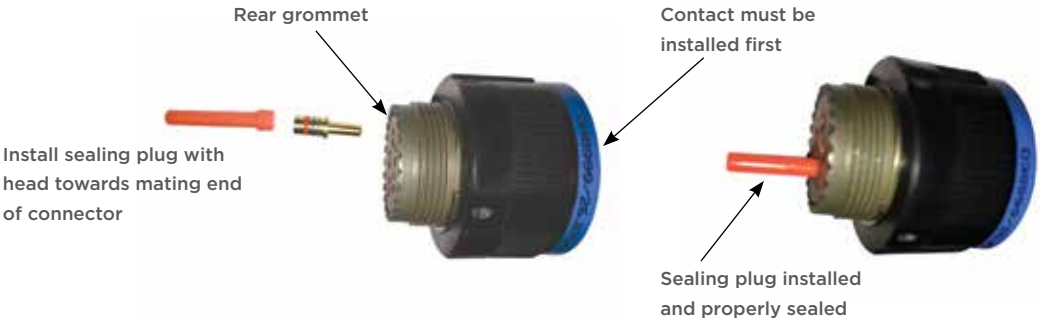

Notes

LET'S CONNECT

We make it easy to connect with our experts and are ready to provide all the support you need. Just call your local support number or visit www.te.com/industrial to chat with a Product Information Specialist.

Technical Support

te.com/support-center

North America	+1 800 522 6752	Asia Pacific	+86 400 820 6015
North America (Toll)	+1 717 986 7777	Japan	+81 044 844 8180
EMEA/South Africa	+800 0440 5100	Australia	+61 2 9554 2695
EMEA (Toll)	+31 73 624 6999	New Zealand	+64 (0) 9 634 4580
India (Toll-Free)	+800 440 5100		

Withstand Harsh Environments with Rugged, Capable Connectors for Signal, Power, Control, and Optical Needs

te.com/38999

AMP, AGASTAT, CeeLok FAS-X, CII, DEUTSCH, HARTMAN, HexaShield, KILOVAC, MICRODOT, NANONICS, POLAMCO, PRO BEAM, Raychem, SEACON, TE, TE Connectivity and the TE connectivity (logo) are trademarks of TE Connectivity. Other products, logos, and company names mentioned herein may be trademarks of their respective owners.

While TE Connectivity (TE) has made every reasonable effort to ensure the accuracy of the information herein, nothing herein constitutes any guarantee that such information is error-free, or any other representation, warranty or guarantee that the information is accurate, correct, reliable or current. The TE entity issuing this publication reserves the right to make any adjustments to the information contained herein at any time without notice. All implied warranties regarding the information contained herein, including, but not limited to, any implied warranties of merchantability or fitness for a particular purpose are expressly disclaimed. The dimensions herein are for reference purposes only and are subject to change without notice. Specifications are subject to change without notice.

Consult TE for the latest dimensions and design specifications.

© 2018 TE Connectivity. All Rights Reserved.

1-1773922-9 01/18