MATERIALS AND FINISHES

BODY, COUPLING NUT BRASS
PLATED GOLD

CENTER CONTACT BRASS
PLATED GOLD

INSULATOR TEFLON

GASKET SILICONE RUBBER

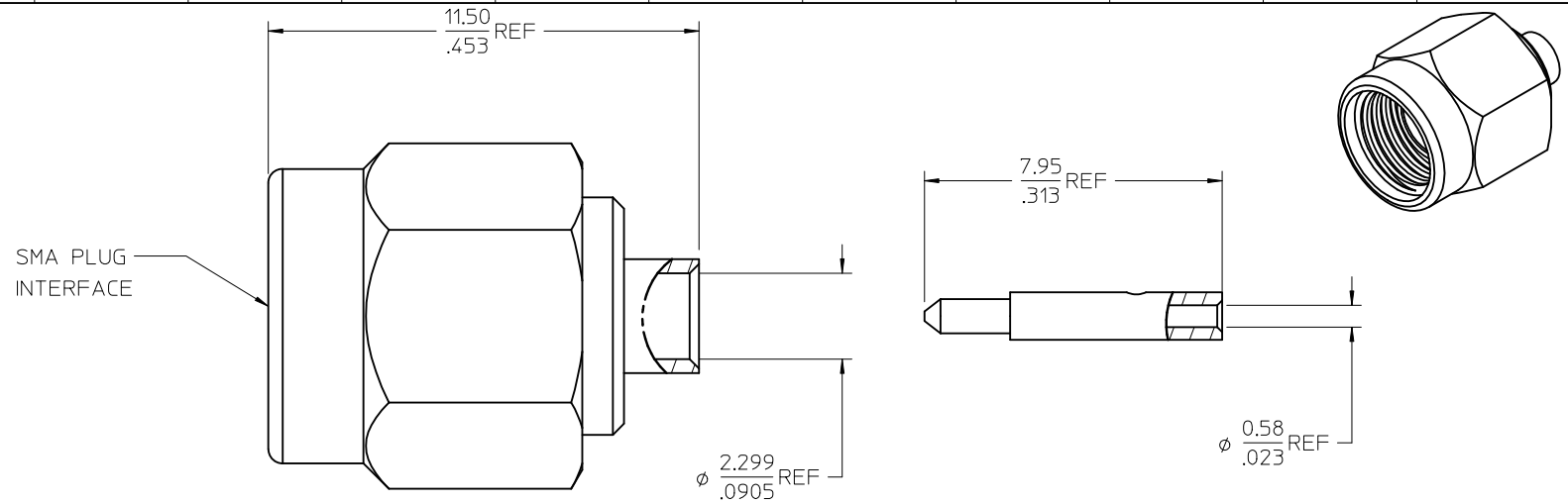

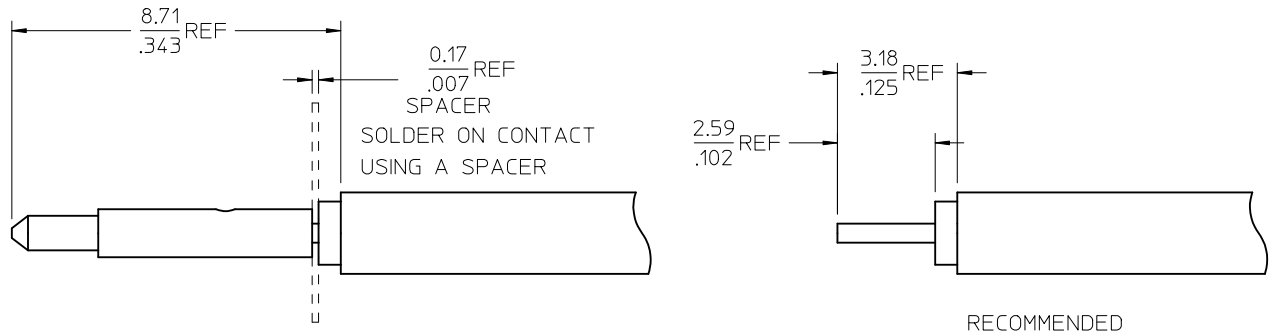

RECOMMENDED
STRIP DIMENSIONS

PART NO.	PACKAGING
73251-3041	ONE PIECE 73251-3040 PER BAG
73251-3040	BULK

SPECIFICATION	DESCRIPTION
MIL-STD-348A, FIG. 310.1	INTERFACE

CHG: CLARIFIED BAGGING.
EC NO: URF2010-0369
DRWN:AROBERTSON 2009/12/18
CH'KD:SSS 2009/12/18
APPR: JWIENER 2009/12/18
DESCRIPTION
REV
A1

QUALITY SYMBOLS
▼=0
▽=0

GENERAL TOLERANCES (UNLESS SPECIFIED)

	mm	INCH
4 PLACES	± ---	± ---
3 PLACES	± ---	± ---
2 PLACES	± ---	± ---
1 PLACE	± ---	± ---
ANGULAR ± 1 °		

DRAFT WHERE APPLICABLE MUST REMAIN WITHIN DIMENSIONS

DIMENSION STYLE: MM/IN
SCALE
DESIGN UNITS: METRIC
THIRD ANGLE PROJECTION

		DATE
DRAWN BY	JM	2006/07/26
CHECKED BY	JM	2006/07/26
APPROVED BY	JDW	2006/07/26

TITLE: SMA PLUG, STRAIGHT CABLE SR.086, 50 OHMS EWR-3159, SMA-PC

molex MOLEX INCORPORATED

MATERIAL NO.: SEE TABLE
DOCUMENT NO.: SD-73251-304
SHEET NO.: 1 OF 1
SIZE: C

THIS DRAWING CONTAINS INFORMATION THAT IS PROPRIETARY TO MOLEX INCORPORATED AND SHOULD NOT BE USED WITHOUT WRITTEN PERMISSION