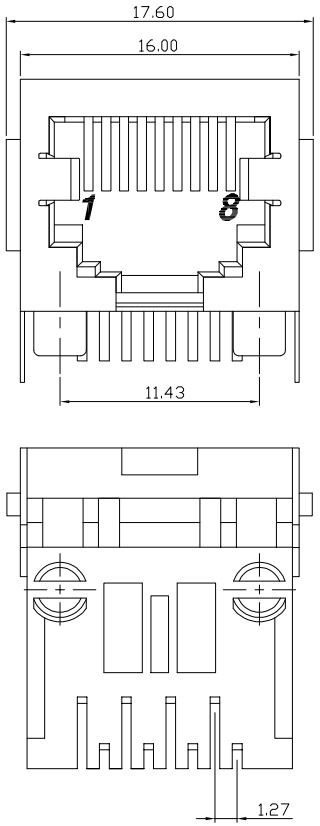

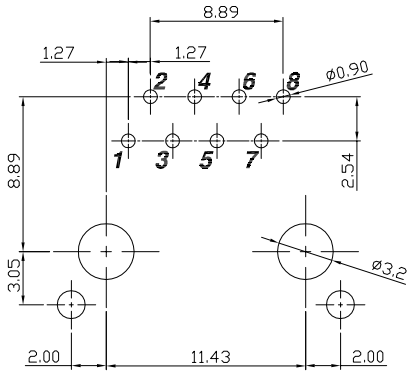

PCB LAYOUT(Top View)

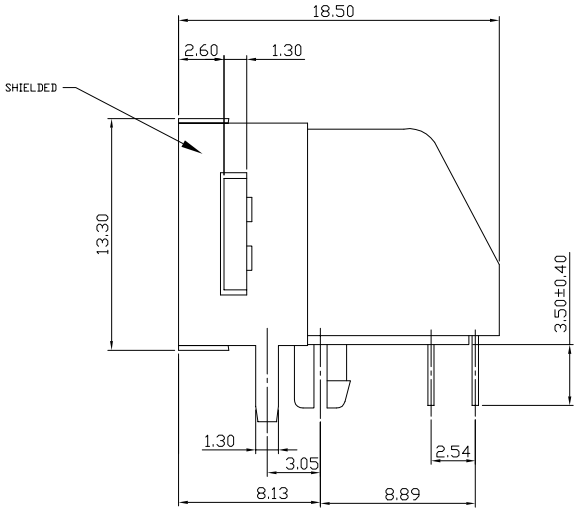

Specification:

1. Electrical Char
   Insulation Resistance: 500MΩ min. 500V DC for 1 minute
   Contact Resistance: 30mΩ max.
   Rating Current: 1.5A max.
   Rating Voltage: 120V AC
   Dielectric Voltage: 1000 Vrms at 1MA 60 sec. min.

2. Physical Char
   Housing: PBT Glass filled (UL 94V-0) Color: Black
   Soldering Temperature: 235°C for 5 sec.
   Spring Wire: 0.35mm thickness Phosphor Bronze
   6u" Gold on contact area over 50u" Nickel
   Temperature Range: -40°C to +85°C
   Durability: 750 mating cycles min.

3. Packing: Tray

RoHS compliant
Unit:mm

Scale	Free
TOLERANCE	
.XX	±0.20
.XXX	±0.13
.XXXX	±0.05
DIM	TOL
Angle	+0°30'

Id.	Modification	Date	Name
0	Drawn	21.07.2016	Winnie

	Date	Name
Drawn	21.07.2017	Winnie
Approved	21.07.2017	Winnie

ASSMANN WSW components

Customer-No.

ASSMANN WSW-No.
A-2004-2-4-LPS-R

Drawing-No.
ASS 7322 CO

rev00

Replace

SHEET