THIS DRAWING IS UNPUBLISHED. RELEASED FOR PUBLICATION FEB ,2003.
© COPYRIGHT 2003 BY TYCO ELECTRONICS CORPORATION. ALL RIGHTS RESERVED.

LOC	DIST
DW	—

REVISIONS

P	LTR	DESCRIPTION	DATE	DWN	APVD
	J	REVISED ECR-06-017657	12SEP06	S.H	W.K

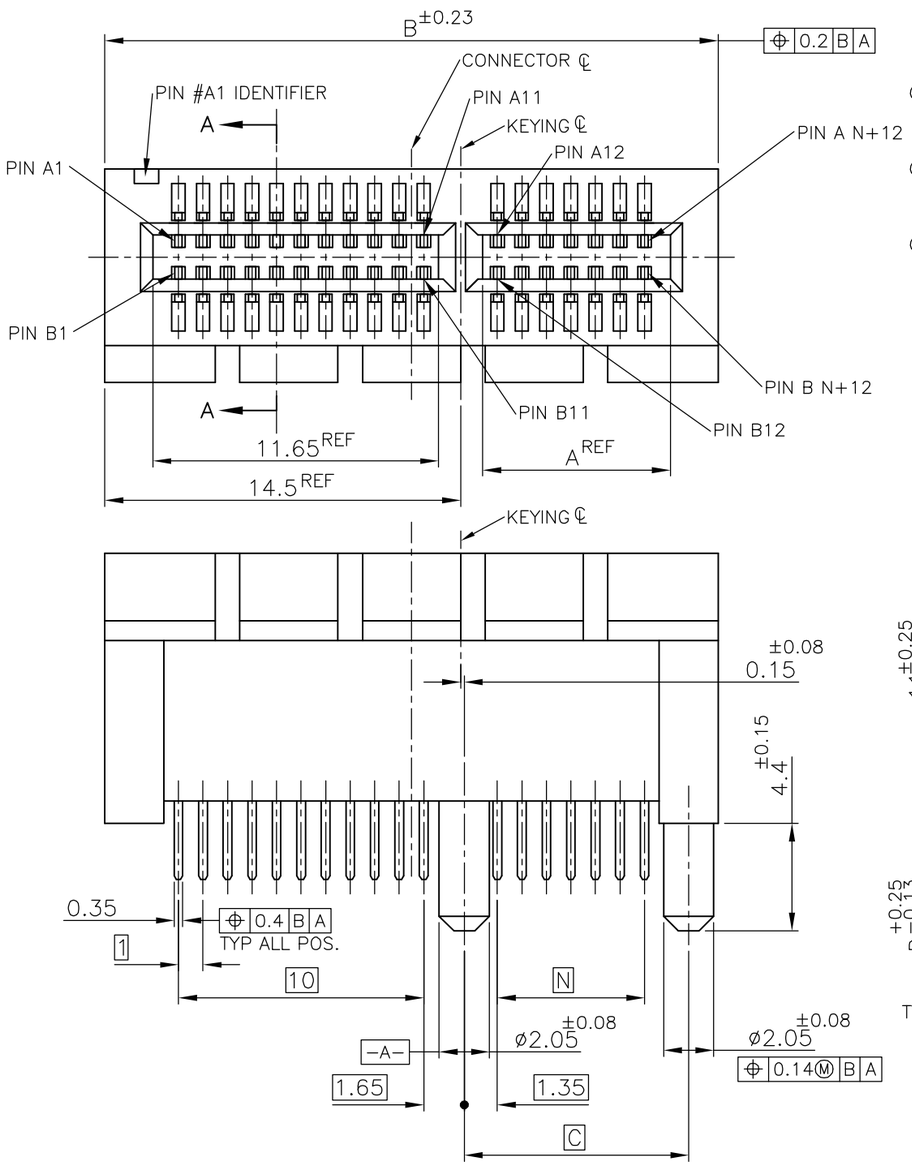

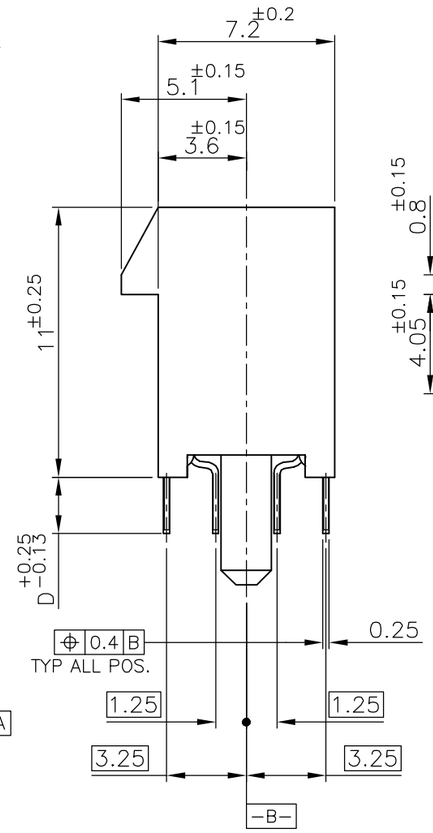

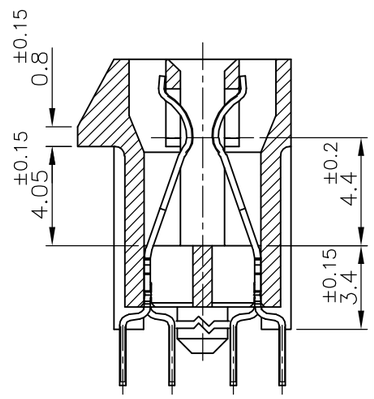

SECT A-A
(ROTATE CW 90°)

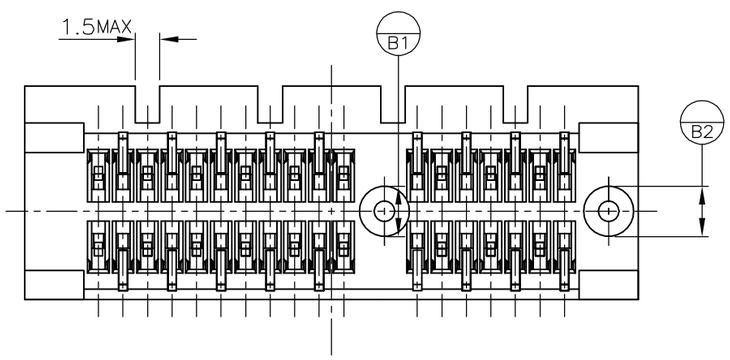

1. MATERIAL;
   HOUSING: HIGH TEMPERATURE THERMO PLASTIC
   UL94V-0, COLOR; BLACK
   CONTACT:COPPER ALLOY
2. FINISH;
   CONTACT AREA:GOLD PL.0.05μm MIN OVER NICKEL PL.
   TINE AREA: MATTE TIN PL. OVER NICKEL PL.
3. FINISH;
   CONTACT AREA: GOLD PL.0.38μm MIN OVER NICKEL PL.
   TINE AREA: MATTE TIN PL. OVER NICKEL PL.
4. FINISH;
   CONTACT AREA: GOLD PL.0.76μm MIN OVER NICKEL PL.
   TINE AREA: MATTE TIN PL. OVER NICKEL PL.

TOOLING STATUS	FINISH	N	D	C	B	A	POS.	PORT	P/N
PRODUCING		70		73.15	89	71.65	164	16	8- -4
PRODUCING		37		40.15	56	38.65	98	8	8- -3
PRODUCING		20		23.15	39	21.65	64	4	8- -2
PRODUCING	4	6		9.15	25	7.65	36	1	8-1612163-1
PRODUCING		70		73.15	89	71.65	164	16	6- -4
PRODUCING		37		40.15	56	38.65	98	8	6- -3
PRODUCING		20		23.15	39	21.65	64	4	6- -2
PRODUCING	2	6	3.56	9.15	25	7.65	36	1	6-1612163-1
PRODUCING		70		73.15	89	71.65	164	16	5- -4
PRODUCING		37		40.15	56	38.65	98	8	5- -3
PRODUCING		20		23.15	39	21.65	64	4	5- -2
PRODUCING		6	3.1	9.15	25	7.65	36	1	5-1612163-1
PRODUCING		70		73.15	89	71.65	164	16	4- -4
PRODUCING		37		40.15	56	38.65	98	8	4- -3
PRODUCING		20		23.15	39	21.65	64	4	4- -2
PRODUCING	4	6	2.3	9.15	25	7.65	36	1	4-1612163-1
PRODUCING		70		73.15	89	71.65	164	16	3- -4
PRODUCING		37		40.15	56	38.65	98	8	3- -3
PRODUCING		20		23.15	39	21.65	64	4	3- -2
PRODUCING		6	3.1	9.15	25	7.65	36	1	3-1612163-1
PRODUCING		70		73.15	89	71.65	164	16	2- -4
PRODUCING		37		40.15	56	38.65	98	8	2- -3
PRODUCING		20		23.15	39	21.65	64	4	2- -2
PRODUCING	3	6	2.3	9.15	25	7.65	36	1	2-1612163-1
PRODUCING		70		73.15	89	71.65	164	16	1- -4
PRODUCING		37		40.15	56	38.65	98	8	1- -3
PRODUCING		20		23.15	39	21.65	64	4	1- -2
PRODUCING		6	3.1	9.15	25	7.65	36	1	1-1612163-1
PRODUCING		70		73.15	89	71.65	164	16	-4
PRODUCING		37		40.15	56	38.65	98	8	-3
PRODUCING		20		23.15	39	21.65	64	4	-2
PRODUCING	2	6	2.3	9.15	25	7.65	36	1	1612163-1

THIS DRAWING IS A CONTROLLED DOCUMENT.

DIMENSIONS: MM

TOLERANCES UNLESS OTHERWISE SPECIFIED:
~~0 PLC ± —~~ ±0.3
~~1 PLC ± —~~ ±2°
~~2 PLC ± —~~
~~3 PLC ± —~~
~~4 PLC ± —~~
~~ANGLES ± —~~

MATERIAL: 1

FINISH: SEE TABLE

DWN	K.KOBAYASHI	20FEB03
CHK	H.SHIRAI	21FEB03
APVD	Y.YAMAMOTO	21FEB03
PRODUCT SPEC	108-5847	
APPLICATION SPEC		
WEIGHT		

CUSTOMER DRAWING

tyco Electronics — Tyco Holdings (Bermuda) VII LTD, Taiwan Branch

NAME: PCI EXPRESS CARD EDGE CONN. V-TYPE

SIZE	CAGE CODE	DRAWING NO	RESTRICTED TO
A3	00779	C-1612163	—

SCALE	SHEET	REV
4:1	1 OF 2	J

AMP 1470-19 REV 31MAR2000

THIS DRAWING IS UNPUBLISHED. RELEASED FOR PUBLICATION FEB ,2003.
© COPYRIGHT 2003 BY TYCO ELECTRONICS CORPORATION. ALL RIGHTS RESERVED.

LOC	DIST
DW	—

REVISIONS

P	LTR	DESCRIPTION	DATE	DWN	APVD
	—	SEE SHEET 1	—	—	—

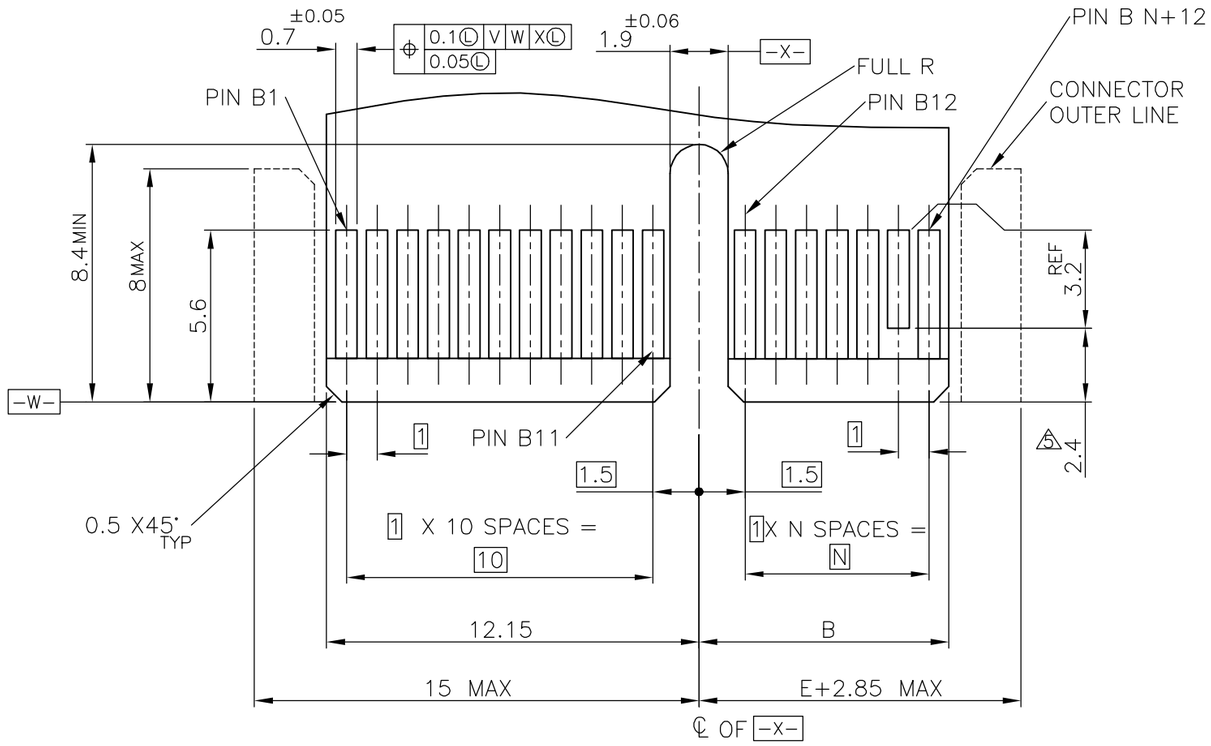

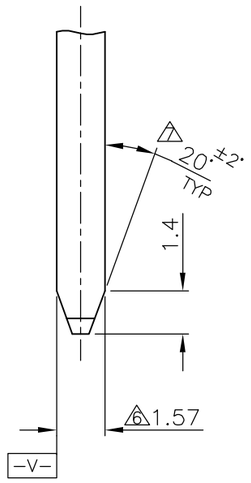

5 THIS DIMENSION IS ONLY APPLIED TO PRSNT PINS.
6 CARD THICKNESS APPLIES ACROSS TABS AND INCLUDES PLATING AND/OR METALIZATION.
7 CHAMFER EDGES MUST BE FREE OF CUTTING BURRS.
8 NO TIE BAR PERMITTED FROM CARD EDGE TO LEADING EDGE OF PAD FOR PRSNT PIN.
9 APPLICATION NOTE;
GOLD CONTACT PAD : ELECTROLESS GOLD PLATING 0.05μm MIN. OVER ELECTROLESS Ni PLATING 2μm MIN.

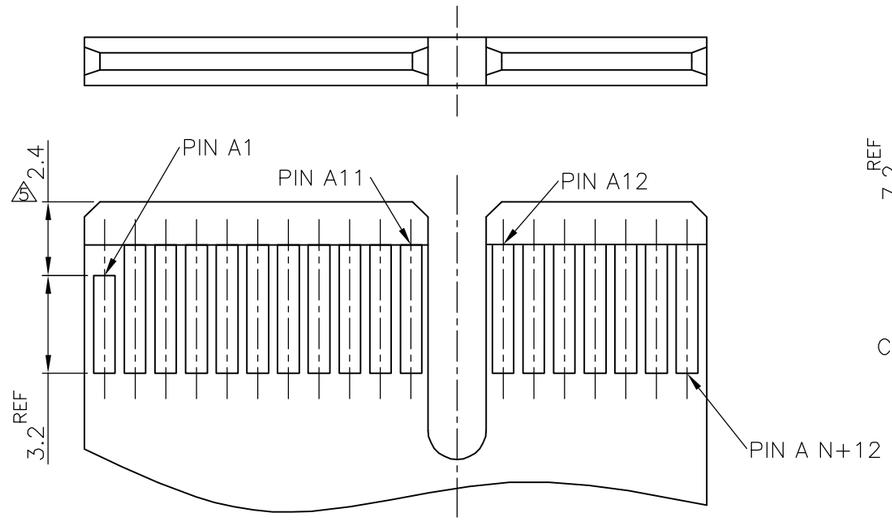

MODULE LAYOUT(MATING PART ONLY)

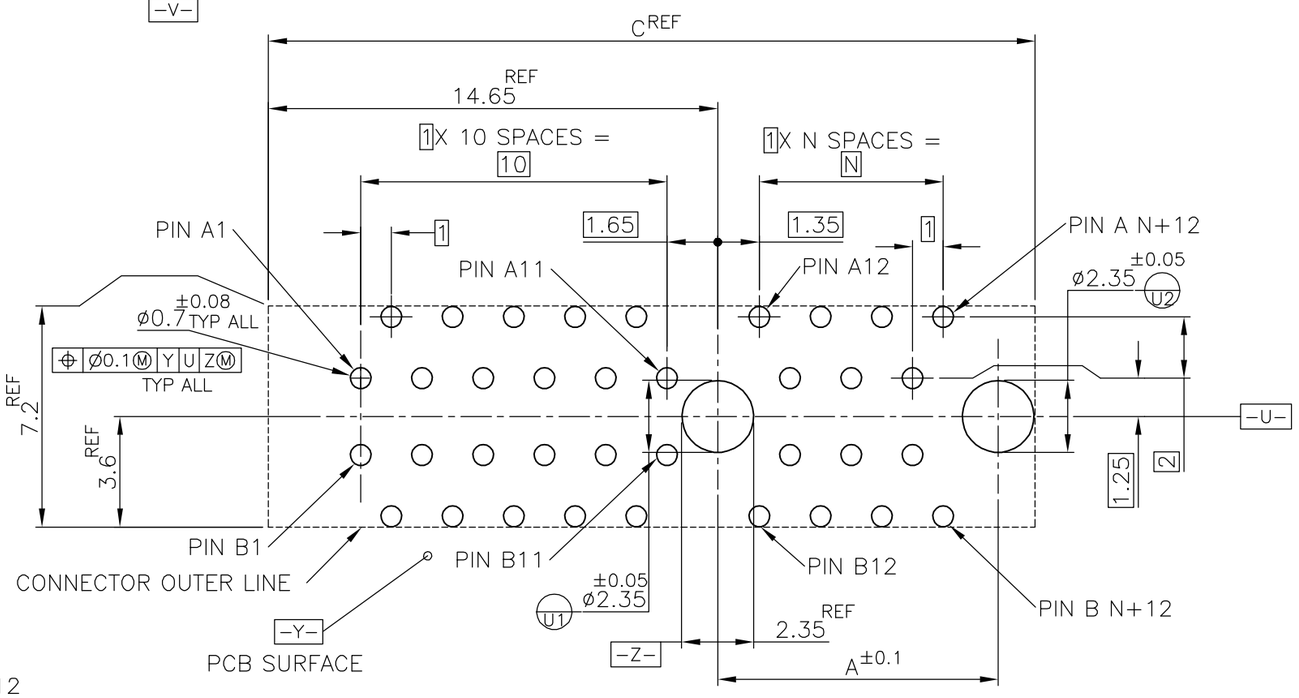

PCB PATTERN LAYOUT

A1,B17,B31,B48,B81	89	72.15	73.15	70	164	16
A1,B17,B31,B48	56	39.15	40.15	37	98	8
A1,B17,B31	39	22.15	23.15	20	64	4
A1,B17	25	8.15	9.15	6	36	1
PRSNT PIN	C	B	A	N	POS.	PORT

THIS DRAWING IS A CONTROLLED DOCUMENT.

DIMENSIONS: MM

TOLERANCES UNLESS OTHERWISE SPECIFIED:
~~0 PLC ± —~~
~~1 PLC ± —~~
~~2 PLC ± —~~
~~3 PLC ± —~~
~~4 PLC ± —~~
~~ANGLES ± —~~
±0.13
±1°

MATERIAL

FINISH

DWN
CHK
APVD
PRODUCT SPEC
APPLICATION SPEC
WEIGHT

tyco Electronics

Tyco Holdings (Bermuda)
VII LTD, Taiwan Branch

NAME
PCI EXPRESS CARD EDGE CONN.
V-TYPE

SIZE	CAGE CODE	DRAWING NO	RESTRICTED TO
A3	00779	C-1612163	—

CUSTOMER DRAWING

SCALE	SHEET	REV
8:1	2 OF 2	J

AMP 1470-19 REV 31MAR2000