THIS DRAWING IS UNPUBLISHED. RELEASED FOR PUBLICATION
© COPYRIGHT BY TYCO ELECTRONICS CORPORATION. ALL RIGHTS RESERVED.

LOC	DIST
J	

REVISIONS 変更

P	LTR	DESCRIPTION	DATE	DWN	APVD
	G	REVISED FJB0-0267-03	09MAY03	T.T	H.M

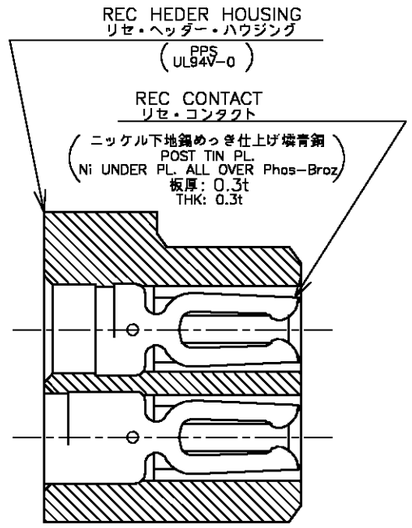

A–A

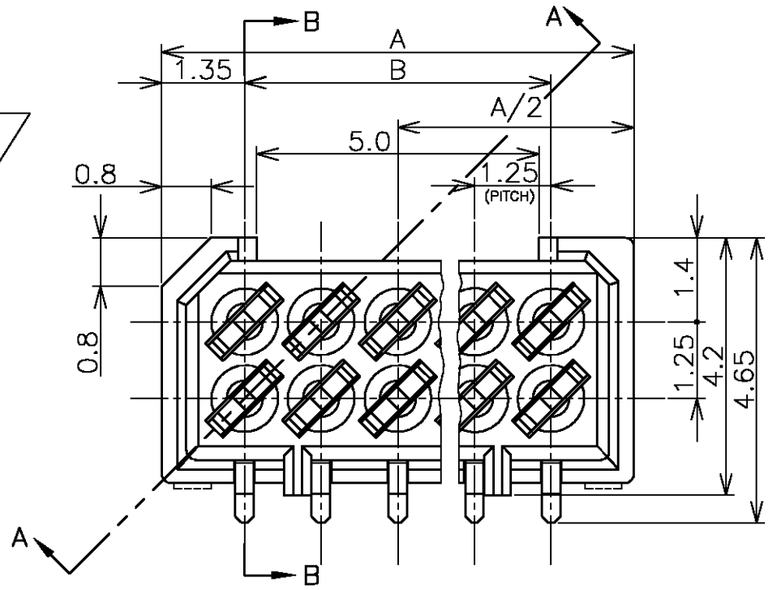

10極以上、20極以下
10 Pos. AND MORE, 20 Pos. AND LESS

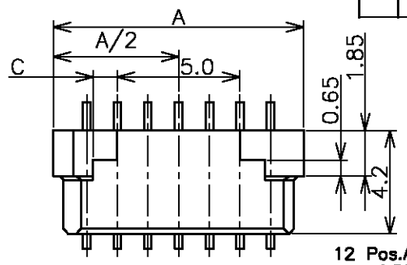

12 Pos.AND MORE
12極以上
(NON SCALE)

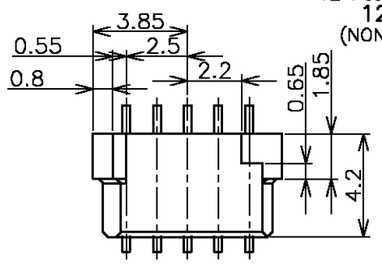

10極 10 Pos.
(NON SCALE)

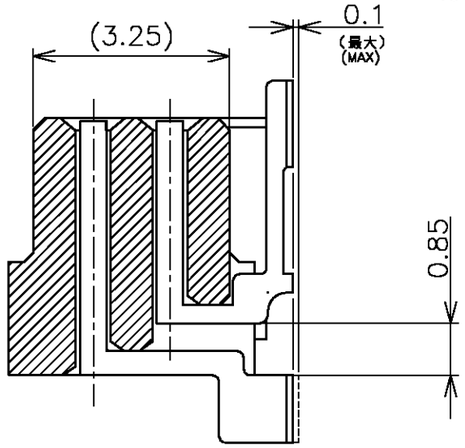

B–B

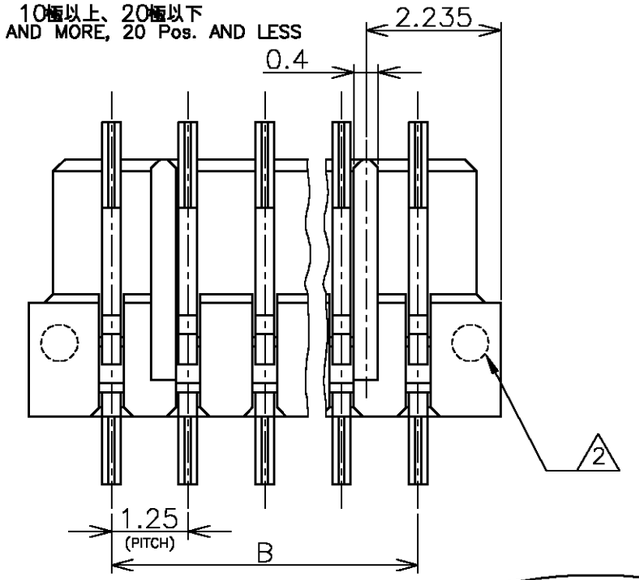

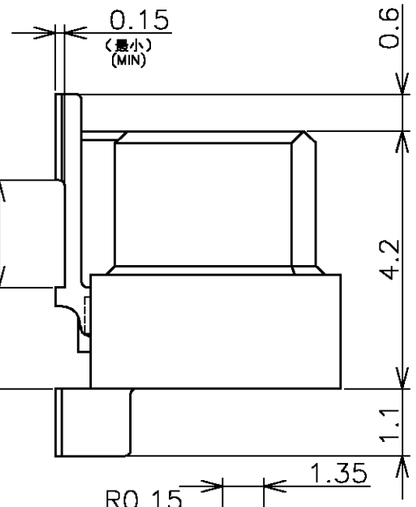

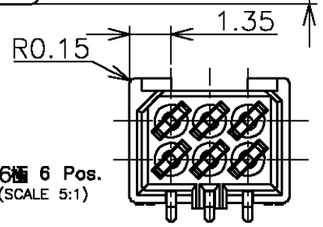

6極 6 Pos.
(SCALE 5:1)

鉛フリー
LEAD FREE

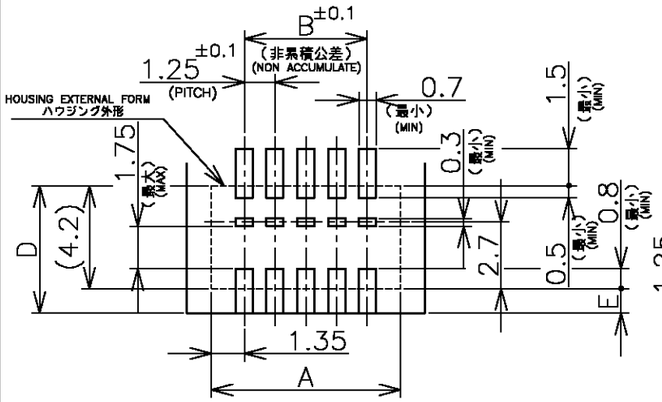

P.C.B MOUNTING LAYOUT
基板加工寸法
(適用基板厚: 0.6mm最小)
(APPLICABLE P.C.B THK : 0.6mm MIN)

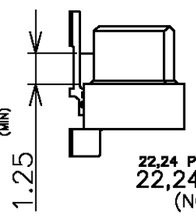

22,24 Pos.(IMPROVED TYPE)
22,24極（リブ低背型）
(NON SCALE)

1.0	5.2	SMT TYPE
1.0~1.6	5.2~5.8	DIP TYPE
E	D	嵌合相手 MATING COUNTER
寸法 DIMENSIONS		POST HDR

嵌合時寸法: 巾(mm)x高さ(mm)
DIMENSIONS AFTER MATING : WIDE(mm) x HEIGHT(mm)

	MATING COUNTER CONN 嵌合相手側コネクタ POST HDR ASSY 製品型番 P/N	高さ H	REC HDR ASSY SMT H TYPE WITHOUT BOSS X-174905-X
DIP TYPE	X-174643-X X-176895-X	3.95	4.65 (巾W) x 6.9 (高さH)
DIP TYPE	X-174643-X	5.95	4.65 (巾W) x 8.9 (高さH)
DIP TYPE	X-176320-X	8.85	4.65 (巾W) x 11.9 (高さH)
DIP TYPE	X-176871-X	9.85	4.65 (巾W) x 12.9 (高さH)
SMT TYPE	ボス無 WITHOUT BOSS X-174645-X X-176769-X	3.95	5.6 (巾W) x 6.9 (高さH)
SMT TYPE	ボス付 WITH BOSS X-174821-X X-176140-X	5.45	5.6 (巾W) x 8.4 (高さH)
SMT TYPE	ボス無 WITHOUT BOSS X-174645-X ボス付 WITH BOSS X-174821-X	5.95	5.6 (巾W) x 8.9 (高さH)
SMT TYPE	ボス無 WITHOUT BOSS X-178041-X ボス付 WITH BOSS X-176757-X	6.85	5.6 (巾W) x 9.9 (高さH)
SMT TYPE	ボス無 WITHOUT BOSS X-176769-X ボス付 WITH BOSS X-176140-X	8.85	7.0 (巾W) x 11.9 (高さH)
SMT TYPE	ボス無 WITHOUT BOSS X-178040-X X-178041-X ボス付 WITH BOSS X-176756-X X-176757-X	9.35	7.0 (巾W) x 12.4 (高さH)

TABLE 1 SMT TYPEは、巾及び高さ寸法に
SMT TYPE INCLUDE DIMENSIONS
半田付タイン部寸法を含みます。
OF SOLDER DIP TINE.

1 嵌合相手製品型番及び、嵌合時寸法は
MATING COUNTER PART NUMBER AND DIMENSIONS
表–1 参照のこと。
AFTER MATING: SEE TABLE 1.

2 基板位置決め用ボス切断跡。
CUT MARK OF MOUNTING BOSS.

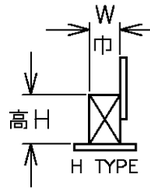

			13.75	16.45	24	5–	–4
			12.50	15.20	22	5–	–2
			11.25	13.95	20	5–	–0
		2.0	10.00	12.70	18	4–	–8
		1.5	8.75	11.45	16	4–	–6
		1.0	7.50	10.20	14	4–	–4
		0.8	6.25	8.95	12	4–	–2
			5.00	7.70	10	4–	–0
黒色 BLACK			2.50	5.20	6	3–174905–6	
色別 COLOR		C	B	A	極数 Pos.	型番 P/N	

THIS DRAWING IS A CONTROLLED DOCUMENT.

DIMENSIONS: 単位: 粍 MM

TOLERANCES UNLESS OTHERWISE SPECIFIED: 一般公差
0 PLC ±
1 PLC ± 10以下: ±0.2
2 PLC ± 10を超え 30以下: ±0.25
3 PLC ± 30を超え 100以下: ±0.3
4 PLC ± 角度: ±3°
ANGLES ±

MATERIAL 材料 AS SHOWN 図中参照
FINISH 仕上 AS SHOWN 図中参照

DWN	J.TANIGAWA	31MAY88
CHK	S.KIKUCHI	31MAY88
APVD	N.ONOUE	31MAY88
PRODUCT SPEC 製品規格		
APPLICATION SPEC 取付適用規格		
WEIGHT		

CUSTOMER DRAWING

tyco Electronics
Tyco Electronics AMP K.K.
Kawasaki,Japan

NAME 名称: 1.25 F-P CONNECTOR (B-TO-B) DOUBLE ROW REC HDR ASSY (H) SMT TYPE WITHOUT BOSS

NOT the LATEST REVISION

SIZE	CAGE CODE	DRAWING NO 番号	RESTRICTED TO
A3	00779	C-174905	—

SCALE 尺度 10:1 SHEET 1 OF 1 REV G