**Relay for control panel of 1c 15A, and 2c 10A**

# HL RELAYS

**RoHS compliant**

## FEATURES

**1. Compact high-capacity control relay**
In the same external dimensions as an HC relay, this compact power relay enables high-capacity control:
15 A for 1 Form C, 10 A for 2 Form C.
**2. Designed for high reliability**
High operational reliability is achieved by solder-less construction, in which all connections between lead wires and the contact springs and terminal plate are welded.
**3. Various types provided in rich lineup. LED indicator and diode type is also available.**
**4. The terminals are compatible with #187 series tab terminals.**
**5. Sockets and terminal sockets are available.**

## TYPICAL APPLICATIONS

**1. Factory automation equipment and automotive devices**
**2. Control panels, power supply equipment, molding equipment, machine tools, welding equipment, agricultural equipment, etc.**
**3. Office equipment, automatic vending machines, telecommunications equipment, disaster prevention equipment, copiers, measuring devices, medical equipment, amusement devices, etc.**
**4. All types of household appliance**

## ORDERING INFORMATION

**HL** □ - □ - □ - □ - **F**

Contact arrangement
1: 1 Form C
2: 2 Form C

Terminal arrangement
H: Plug-in type
L: Plug-in type with LED indication
HP: PC board type
PL: PC board type with LED indication
HTM: TM type

Nominal coil voltage
AC 6, 12, 24, 48, 100 (100/110), 120 (110/120), 200 (200/220), 240 (220/240) V
DC 6, 12, 24, 48, 100 (100/110) V

Surge absorber
*D: with diode

Contact material
F: $AgSnO_2$ type

Notes: Certified by C-UL, CSA and TÜV
Please inquire about TV approved products.
*Diode type is available. (DC coil Plug-in type with LED indication only)


© Panasonic Corporation 2013

# TYPES

## 1. Plug-in type

| Nominal coil voltage | 1 Form C | 2 Form C |
|---|---|---|
| | Part No. | Part No. |
| 6V AC | HL1-H-AC6V-F | HL2-H-AC6V-F |
| 12V AC | HL1-H-AC12V-F | HL2-H-AC12V-F |
| 24V AC | HL1-H-AC24V-F | HL2-H-AC24V-F |
| 48V AC | HL1-H-AC48V-F | HL2-H-AC48V-F |
| 100/110V AC | HL1-H-AC100V-F | HL2-H-AC100V-F |
| 110/120V AC | HL1-H-AC120V-F | HL2-H-AC120V-F |
| 200/220V AC | HL1-H-AC200V-F | HL2-H-AC200V-F |
| 220/240V AC | HL1-H-AC240V-F | HL2-H-AC240V-F |
| 6V DC | HL1-H-DC6V-F | HL2-H-DC6V-F |
| 12V DC | HL1-H-DC12V-F | HL2-H-DC12V-F |
| 24V DC | HL1-H-DC24V-F | HL2-H-DC24V-F |
| 48V DC | HL1-H-DC48V-F | HL2-H-DC48V-F |
| 100/110V DC | HL1-H-DC100V-F | HL2-H-DC100V-F |

Standard packing: Carton: 20 pcs.; Case: 200 pcs.

## 2. Plug-in type (with LED indication)

| Nominal coil voltage | 1 Form C | 2 Form C |
|---|---|---|
| | Part No. | Part No. |
| 6V AC | HL1-L-AC6V-F | HL2-L-AC6V-F |
| 12V AC | HL1-L-AC12V-F | HL2-L-AC12V-F |
| 24V AC | HL1-L-AC24V-F | HL2-L-AC24V-F |
| 48V AC | HL1-L-AC48V-F | HL2-L-AC48V-F |
| 100/110V AC | HL1-L-AC100V-F | HL2-L-AC100V-F |
| 110/120V AC | HL1-L-AC120V-F | HL2-L-AC120V-F |
| 200/220V AC | HL1-L-AC200V-F | HL2-L-AC200V-F |
| 220/240V AC | HL1-L-AC240V-F | HL2-L-AC240V-F |
| 6V DC | HL1-L-DC6V-F | HL2-L-DC6V-F |
| 12V DC | HL1-L-DC12V-F | HL2-L-DC12V-F |
| 24V DC | HL1-L-DC24V-F | HL2-L-DC24V-F |
| 48V DC | HL1-L-DC48V-F | HL2-L-DC48V-F |
| 100/110V DC | HL1-L-DC100V-F | HL2-L-DC100V-F |

Standard packing: Carton: 20 pcs.; Case: 200 pcs.

## 3. Plug-in type (with LED indication and diode)

| Nominal coil voltage | 1 Form C | 2 Form C |
|---|---|---|
| | Part No. | Part No. |
| 6V DC | HL1-L-DC6V-D-F | HL2-L-DC6V-D-F |
| 12V DC | HL1-L-DC12V-D-F | HL2-L-DC12V-D-F |
| 24V DC | HL1-L-DC24V-D-F | HL2-L-DC24V-D-F |
| 48V DC | HL1-L-DC48V-D-F | HL2-L-DC48V-D-F |
| 100/110V DC | HL1-L-DC100V-D-F | HL2-L-DC100V-D-F |

Standard packing: Carton: 20 pcs.; Case: 200 pcs.

## 4. PC board type

| Nominal coil voltage | 1 Form C | 2 Form C |
|---|---|---|
| | Part No. | Part No. |
| 6V AC | HL1-HP-AC6V-F | HL2-HP-AC6V-F |
| 12V AC | HL1-HP-AC12V-F | HL2-HP-AC12V-F |
| 24V AC | HL1-HP-AC24V-F | HL2-HP-AC24V-F |
| 48V AC | HL1-HP-AC48V-F | HL2-HP-AC48V-F |
| 100/110V AC | HL1-HP-AC100V-F | HL2-HP-AC100V-F |
| 110/120V AC | HL1-HP-AC120V-F | HL2-HP-AC120V-F |
| 200/220V AC | HL1-HP-AC200V-F | HL2-HP-AC200V-F |
| 220/240V AC | HL1-HP-AC240V-F | HL2-HP-AC240V-F |
| 6V DC | HL1-HP-DC6V-F | HL2-HP-DC6V-F |
| 12V DC | HL1-HP-DC12V-F | HL2-HP-DC12V-F |
| 24V DC | HL1-HP-DC24V-F | HL2-HP-DC24V-F |
| 48V DC | HL1-HP-DC48V-F | HL2-HP-DC48V-F |
| 100/110V DC | HL1-HP-DC100V-F | HL2-HP-DC100V-F |

Standard packing: Carton: 20 pcs.; Case: 200 pcs.

## 5. PC board type (with LED indication)

| Nominal coil voltage | 1 Form C | 2 Form C |
|---|---|---|
| | Part No. | Part No. |
| 6V AC | HL1-PL-AC6V-F | HL2-PL-AC6V-F |
| 12V AC | HL1-PL-AC12V-F | HL2-PL-AC12V-F |
| 24V AC | HL1-PL-AC24V-F | HL2-PL-AC24V-F |
| 48V AC | HL1-PL-AC48V-F | HL2-PL-AC48V-F |
| 100/110V AC | HL1-PL-AC100V-F | HL2-PL-AC100V-F |
| 110/120V AC | HL1-PL-AC120V-F | HL2-PL-AC120V-F |
| 200/220V AC | HL1-PL-AC200V-F | HL2-PL-AC200V-F |
| 220/240V AC | HL1-PL-AC240V-F | HL2-PL-AC240V-F |
| 6V DC | HL1-PL-DC6V-F | HL2-PL-DC6V-F |
| 12V DC | HL1-PL-DC12V-F | HL2-PL-DC12V-F |
| 24V DC | HL1-PL-DC24V-F | HL2-PL-DC24V-F |
| 48V DC | HL1-PL-DC48V-F | HL2-PL-DC48V-F |
| 100/110V DC | HL1-PL-DC100V-F | HL2-PL-DC100V-F |

Standard packing: Carton: 20 pcs.; Case: 200 pcs.

## 6. TM type

| Nominal coil voltage | 1 Form C | 2 Form C |
|---|---|---|
| | Part No. | Part No. |
| 6V AC | HL1-HTM-AC6V-F | HL2-HTM-AC6V-F |
| 12V AC | HL1-HTM-AC12V-F | HL2-HTM-AC12V-F |
| 24V AC | HL1-HTM-AC24V-F | HL2-HTM-AC24V-F |
| 48V AC | HL1-HTM-AC48V-F | HL2-HTM-AC48V-F |
| 100/110V AC | HL1-HTM-AC100V-F | HL2-HTM-AC100V-F |
| 110/120V AC | HL1-HTM-AC120V-F | HL2-HTM-AC120V-F |
| 200/220V AC | HL1-HTM-AC200V-F | HL2-HTM-AC200V-F |
| 220/240V AC | HL1-HTM-AC240V-F | HL2-HTM-AC240V-F |
| 6V DC | HL1-HTM-DC6V-F | HL2-HTM-DC6V-F |
| 12V DC | HL1-HTM-DC12V-F | HL2-HTM-DC12V-F |
| 24V DC | HL1-HTM-DC24V-F | HL2-HTM-DC24V-F |
| 48V DC | HL1-HTM-DC48V-F | HL2-HTM-DC48V-F |
| 100/110V DC | HL1-HTM-DC100V-F | HL2-HTM-DC100V-F |

Standard packing: Carton: 20 pcs.; Case: 200 pcs.


© Panasonic Corporation 2013

# RATING

## 1. Coil data

### 1) AC coils

| Nominal coil voltage | Nominal coil current (mA) | | Nominal operating power (VA) | | Pick-up voltage (at 20°C 68°F) | Drop-out voltage (at 20°C 68°F) | Inductance (H) | | Max. applied voltage (at 70°C 158°F) |
|---|---|---|---|---|---|---|---|---|---|
| | 50Hz | 60Hz | 50Hz | 60Hz | | | When drop-out | When operating | |
| 6V AC | 224 | 200 | 1.3 | 1.2 | 80%V or less of nominal voltage (Initial) | 30%V or more of nominal voltage (Initial) | 0.078 | 0.074 | 110%V of nominal voltage |
| 12V AC | 111 | 100 | | | | | 0.312 | 0.295 | |
| 24V AC | 56 | 50 | | | | | 1.243 | 1.181 | |
| 48V AC | 28 | 25 | | | | | 4.974 | 4.145 | |
| 100/110V AC | 13.4/14.7 | 12/13.2 | | | | | 23.75 | 20.63 | |
| 110/120V AC | 12.2/13.5 | 10.9/11.9 | | | | | 27.19 | 25.57 | |
| 200/220V AC | 6.7/7.4 | 6/6.6 | | | | | 85.98 | 81.76 | |

Notes: 1. The relay operates in a range of 80% to 110% V of the nominal voltage, but ideally, in consideration of temporary voltage fluctuations, it should be operated at the rated voltage.
In particular, for AC operation, if the applied voltage drops to 80% V or more below the nominal voltage, humming will occur and a large current will flow leading possibly to coil burnout.
2. The maximum applied voltage is the maximum voltage fluctuation value for the coil power supply. This value is not a permissible value for continuous operation. (This value differs depending on the ambient temperature. Please contact us for details.)

### 2) DC coils (at 20°C 68°F)

| Nominal coil voltage | Nominal coil current (mA) | Nominal operating power (W) | Coil resistance (Ω) | Pick-up voltage (at 20°C 68°F) | Drop-out voltage (at 20°C 68°F) | Max. applied voltage (at 70°C 158°F) |
|---|---|---|---|---|---|---|
| 6V DC | 150 | 0.9 | 40 | 80%V or less of nominal voltage (Initial) | 10%V or more of nominal voltage (Initial) | 110%V of nominal voltage |
| 12V DC | 75 | | 160 | | | |
| 24V DC | 37 | | 650 | | | |
| 48V DC | 18.5 | | 2,600 | | | |
| 100/110V DC | 10 | 1.0 | 10,000 | | | |

Notes: 1. The nominal operating current is ±10% (20°C 68°F).
2. The coil resistance for DC operation is the value measured when the coil temperature is 20°C 68°F. Compensate ±0.4% for every ±1°C change in temperature.
3. The relay operates in a range of 80% to 110% V of the nominal voltage, but ideally, in consideration of temporary voltage fluctuations, it should be operated at the nominal voltage.
4. For use with 200 V DC, connect a 10 KΩ (5W) resistor, in series, to the 100 V DC relay.
5. The maximum applied voltage is the maximum voltage fluctuation value for the coil power supply. This value is not a permissible value for continuous operation. (This value differs depending on the ambient temperature. Please contact us for details.)

## 2. Specifications

| Characteristics | Item | | Specifications |
|---|---|---|---|
| Contact | Contact resistance (Initial) | | Max. 50 mΩ (By voltage drop 6 V DC 1A) |
| | Contact material | | $AgSnO_2$ type |
| Rating | Nominal switching capacity*4 | | 1 Form C: 15A 125V AC, 10A 250V AC (resistive load)<br>2 Form C: 10A 250V AC (resistive load) |
| | Min. switching capacity (Reference value)*1 | | 100mA 5V DC |
| Electrical characteristics | Insulation resistance (Initial) | | Min. 100MΩ (at 500V DC) Measurement at same location as “Breakdown voltage” section. |
| | Breakdown voltage (Initial) | Between open contacts | 1,000 Vrms for 1min. (Detection current: 10mA) |
| | | Between contact sets | 1,500 Vrms for 1min. (Detection current: 10mA) |
| | | Between contact and coil | 2,000 Vrms for 1min. (Detection current: 10mA) |
| | Temperature rise (coil) | | Max. 80°C 176°F (By resistive method, nominal voltage) |
| | Operate time (at 20°C 68°F)*2 | | DC type/AC type: Max. 25ms<br>(Nominal coil voltage applied to the coil, excluding contact bounce time.) |
| | Release time (at 20°C 68°F)*2 | | DC type/AC type: Max. 25ms<br>(Nominal coil voltage applied to the coil, excluding contact bounce time.) (without diode) |
| Mechanical characteristics | Shock resistance | Functional | Min. 196 $m/s^2$ (Half-wave pulse of sine wave: 11 ms; detection time: 10μs.) |
| | | Destructive | Min. 980 $m/s^2$ (Half-wave pulse of sine wave: 6 ms.) |
| | Vibration resistance | Functional | 10 to 55 Hz at double amplitude of 1 mm (Detection time: 10μs.) |
| | | Destructive | 10 to 55 Hz at double amplitude of 2 mm |
| Expected life | Mechanical | | AC type: $5\times10^7$ (at 180 times/min.), DC type: $10^8$ (at 180 times/min.) |
| | Electrical | AC load | 1 Form C: 15A 125V AC, 10A 250V AC resistive load (cosφ=1) Life switching cycle: Min. $5\times10^5$<br>2 Form C: 10A 250V AC resistive load (cosφ=1) Life switching cycle: Min. $3\times10^5$ |
| | | DC load | 1 Form C: 3A 30V DC resistive load (cosφ=1) Life switching cycle: Min. $5\times10^5$<br>2 Form C: 3A 30V DC resistive load (cosφ=1) Life switching cycle: Min. $5\times10^5$ |
| Conditions | Conditions for operation, transport and storage*3 | | Ambient temperature: –50°C to +70°C –58°F to +158°F (Without LED indication);<br>–50°C to +60°C –58°F to +140°F (With LED indication)<br>Humidity: 5 to 85% R.H. (Not freezing and condensing at low temperature) |
| | Max. Operating speed | | 20 times/min. (at max. rating) |
| Unit weight | | | Approx. 35g 1.23 oz |

Notes: If integrating into electrical appliances that will be subject to compliance to the Electrical Appliance and Material Safety Law, please use in an ambient temperature between –50°C to +40°C –58°F to +104°F (AC type).
*1. This value can change due to the switching frequency, environmental conditions and desired reliability level, therefore it is recommended to check this with the actual load.
*2. For the AC coil types, the operate/release time will differ depending on the phase.
*3. The upper limit of the ambient temperature is the maximum temperature that can satisfy the coil temperature rise value. Refer to Usage, transport and storage conditions in NOTES.
*4. When using the socket, be sure to verify the max. continuous current.


© Panasonic Corporation 2013

# REFERENCE DATA

Switching capacity range (1 Form C)

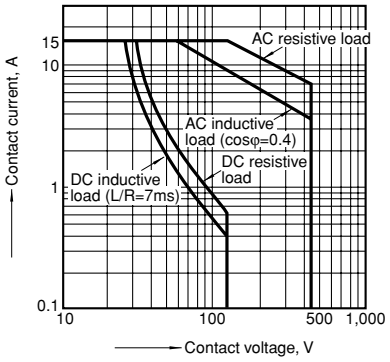


Switching capacity range (2 Form C)

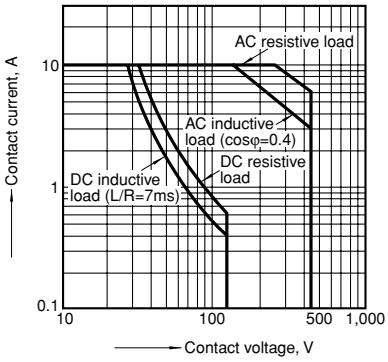


**With diode type (For DC)**

1. DC coil surge voltage waveform (without diode)

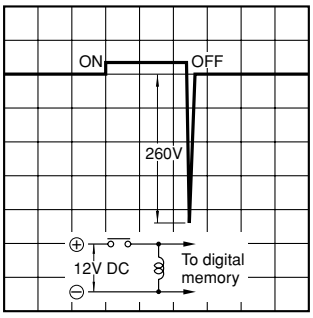


2. DC coil surge voltage waveform (with diode)

Diode characteristics;
Reverse breakdown voltage: 1,000V,
Forward current: 1A

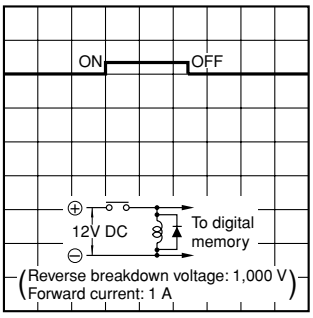


# DIMENSIONS (mm inch)

The CAD data of the products with a CAD Data mark can be downloaded from: http://industrial.panasonic.com/ac/e/

**1. Plug-in type**

1 Form C

CAD Data

External dimensions

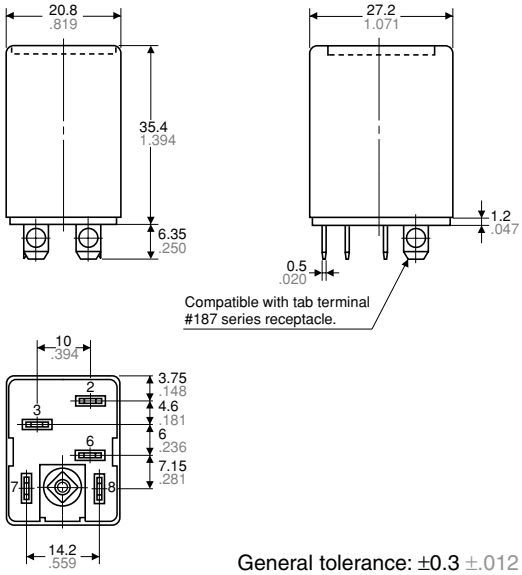


General tolerance: ±0.3 ±.012

Schematic (Bottom view)

Standard type

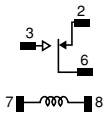


With diode type

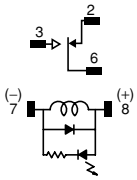


LED AC type

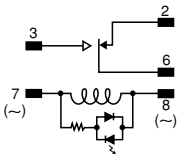


LED DC type

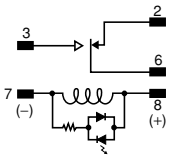



© Panasonic Corporation 2013

2 Form C

**CAD Data**

External dimensions

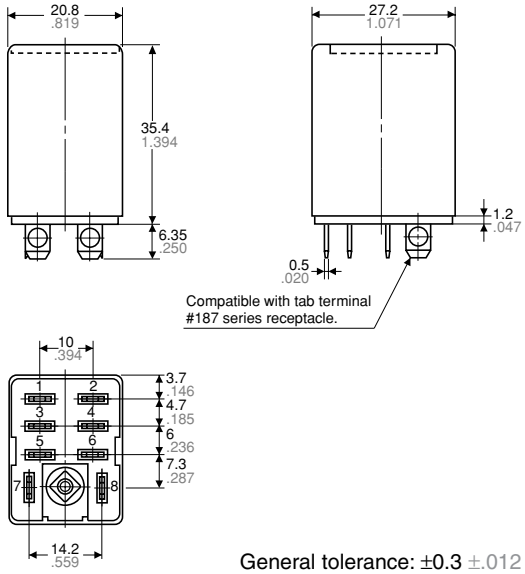


General tolerance: ±0.3 ±.012

Schematic (Bottom view)

Standard type

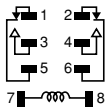

With diode type

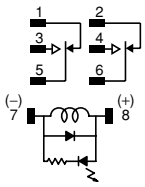

LED AC type

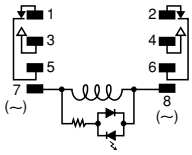

LED DC type

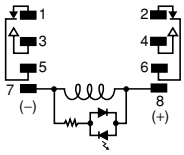

**2. PC board type**

1 Form C

**CAD Data**

External dimensions

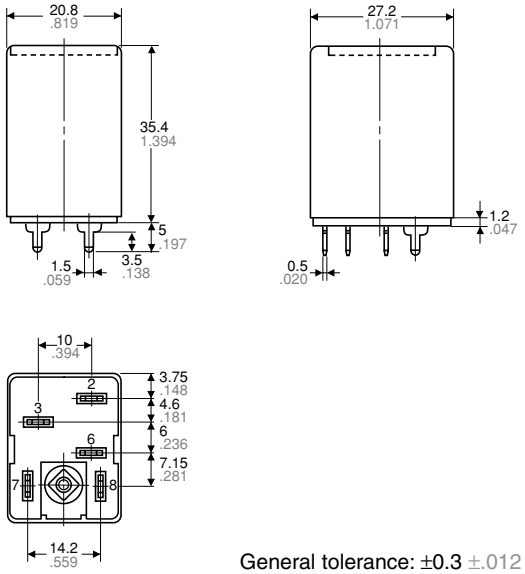


General tolerance: ±0.3 ±.012

Schematic (Bottom view)

Standard type

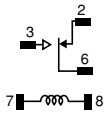

LED AC type

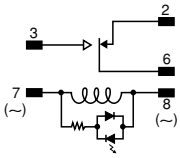

LED DC type

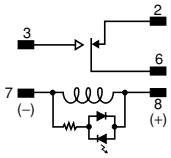

PC board pattern (Bottom view)

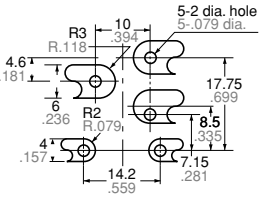


Tolerance: ±0.1 ±.004


© Panasonic Corporation 2013

2 Form C

**CAD Data**

External dimensions

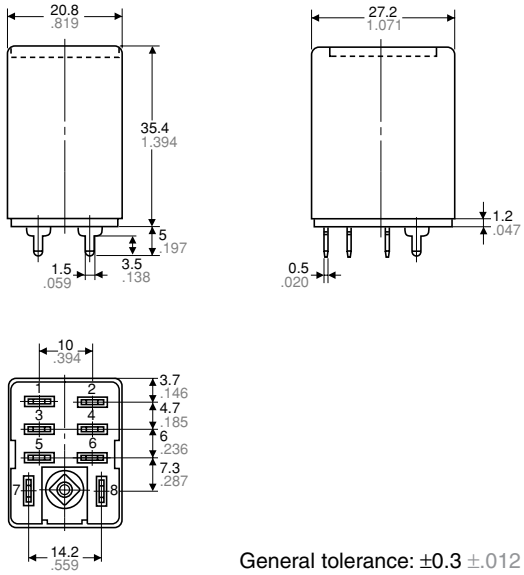


General tolerance: ±0.3 ±.012

Schematic (Bottom view)

Standard type

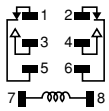

LED AC type

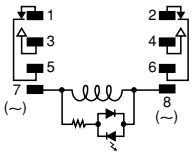


LED DC type

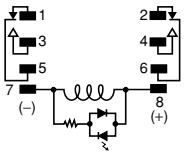


PC board pattern (Bottom view)

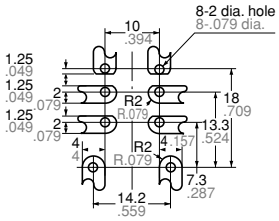


Tolerance: ±0.1 ±.004

**3. TM type**

1 Form C

**CAD Data**

External dimensions

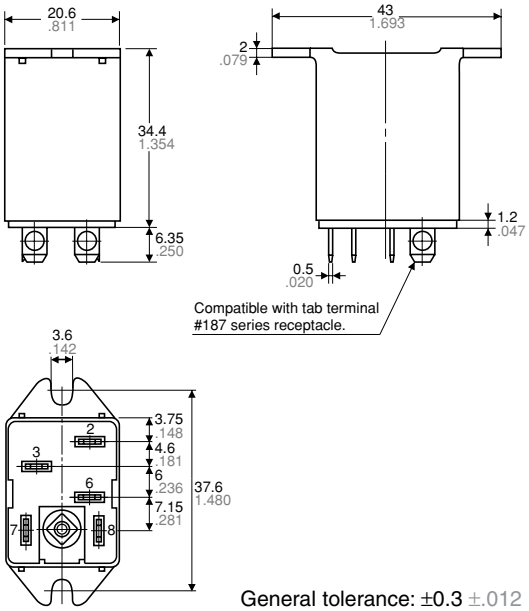


General tolerance: ±0.3 ±.012

Schematic (Bottom view)

Standard type

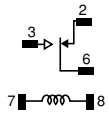

Chassis (Panel) cutout

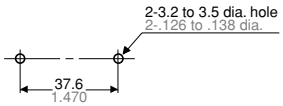


Chassis (Panel) cutout in tandem mounting

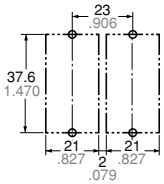


Tolerance: ±0.1 ±.004

Notes:
1. If connecting to #187 series tab terminals, use AMP Faston #187 series or #187 tab terminals conforming to UL or CSA inch-standard dimensions.
2. In mounting, use M3 screws and M3 washers.
3. When mounting TM types, use washers to prevent damage or distortion to the polycarbonate cover.
4. When tightening fixing screws, the optimum torque range should be 0.294 to 0.49 N·m, (3 to 5 kgf·cm). Moreover, use washers to prevent loosening.


© Panasonic Corporation 2013

2 Form C

**CAD Data**

External dimensions

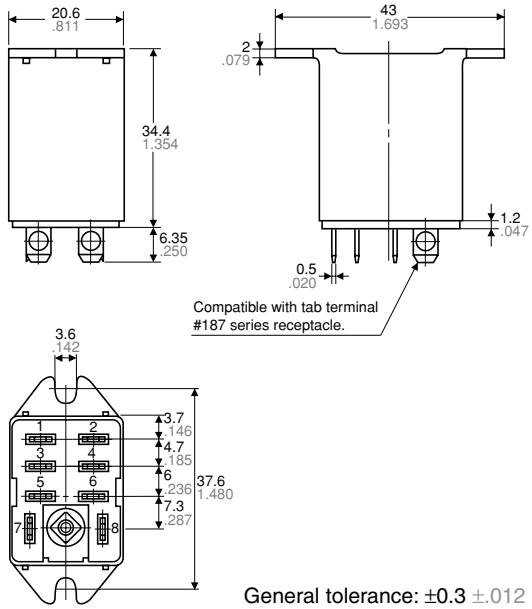


General tolerance: ±0.3 ±.012

Schematic (Bottom view)

Standard type

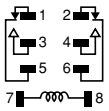


Chassis (Panel) cutout

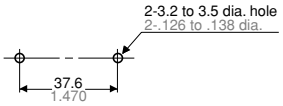


Chassis (Panel) cutout in tandem mounting

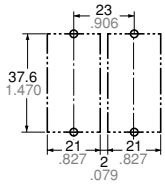


Tolerance: ±0.1 ±.004

Notes: 1. If connecting to #187 series tab terminals, use AMP Faston #187 series or #187 tab terminals conforming to UL or CSA inch-standard dimensions.
2. In mounting, use M3 screws and M3 washers.
3. When mounting TM types, use washers to prevent damage or distortion to the polycarbonate cover.
4. When tightening fixing screws, the optimum torque range should be 0.294 to 0.49 N·m, (3 to 5 kgf·cm). Moreover, use washers to prevent loosening.

# SAFETY STANDARDS

## 1. Standard type (Plug-in type except with diode, PC board type, TM type)

| Contact arrangement | UL/C-UL (Recognized) | | CSA (Certified) | | TV rating (UL/CSA) | | TÜV rating | |
|---|---|---|---|---|---|---|---|---|
| | File No. | Contact rating | File No. | Contact rating | File No. | Rating | File No. | Rating |
| 1 Form C | E43028*1 | 15A 250V AC<br>1/3HP 125, 250V AC<br>10A 30V DC | LR26550<br>etc. | 10A 125, 250V AC<br>1/3HP 125, 250V AC<br>10A 30V DC | UL: E43149<br>CSA: LR26550<br>etc. | NO→TV-5<br>NC→TV-2 | B1304<br>13461 340 | 15A 125V~ (cos$\phi$=1.0)<br>10A 250V~ (cos$\phi$=1.0)<br>10A 30V⎓ (L/R=0ms) |
| 2 Form C | E43028*1 | 10A 250V AC<br>1/3HP 125, 250V AC<br>10A 30V DC | LR26550<br>etc. | 10A 125, 250V AC<br>1/3HP 125, 250V AC<br>10A 30V DC | UL: E43149<br>CSA: LR26550<br>etc. | NO→TV-4<br>NC→TV-2 | B1304<br>13461 340 | 10A 250V~ (cos$\phi$=1.0)<br>10A 30V⎓ (L/R=0ms) |

## 2. Plug-in type (with diode)*2

| Contact arrangement | UL/C-UL (Recognized) | | CSA (Certified) | | TV rating (UL/CSA) | | TÜV rating | |
|---|---|---|---|---|---|---|---|---|
| | File No. | Contact rating | File No. | Contact rating | File No. | Rating | File No. | Rating |
| 1 Form C | E43028*1 | 15A 250V AC<br>1/3HP 125, 250V AC<br>10A 30V DC | — | CSA standard certified by C-UL | — | — | B1304<br>13461 340 | 15A 125V~ (cos$\phi$=1.0)<br>10A 250V~ (cos$\phi$=1.0)<br>10A 30V⎓ (L/R=0ms) |
| 2 Form C | E43028*1 | 10A 250V AC<br>1/3HP 125, 250V AC<br>10A 30V DC | — | CSA standard certified by C-UL | — | — | B1304<br>13461 340 | 10A 250V~ (cos$\phi$=1.0)<br>10A 30V⎓ (L/R=0ms) |

Note: "*1" indicates the UL/C-UL recognition file number.
"*2" DC coil Plug-in type with LED indication only.


© Panasonic Corporation 2013