THIS DRAWING IS UNPUBLISHED. RELEASED FOR PUBLICATION -,- .
© COPYRIGHT - By - ALL RIGHTS RESERVED.

LOC	DIST
G	14

REVISIONS

P	LTR	DESCRIPTION	DATE	DWN	APVD
	AA3	REVISED PER ECO-12-007718	08MAY12	KH	DR

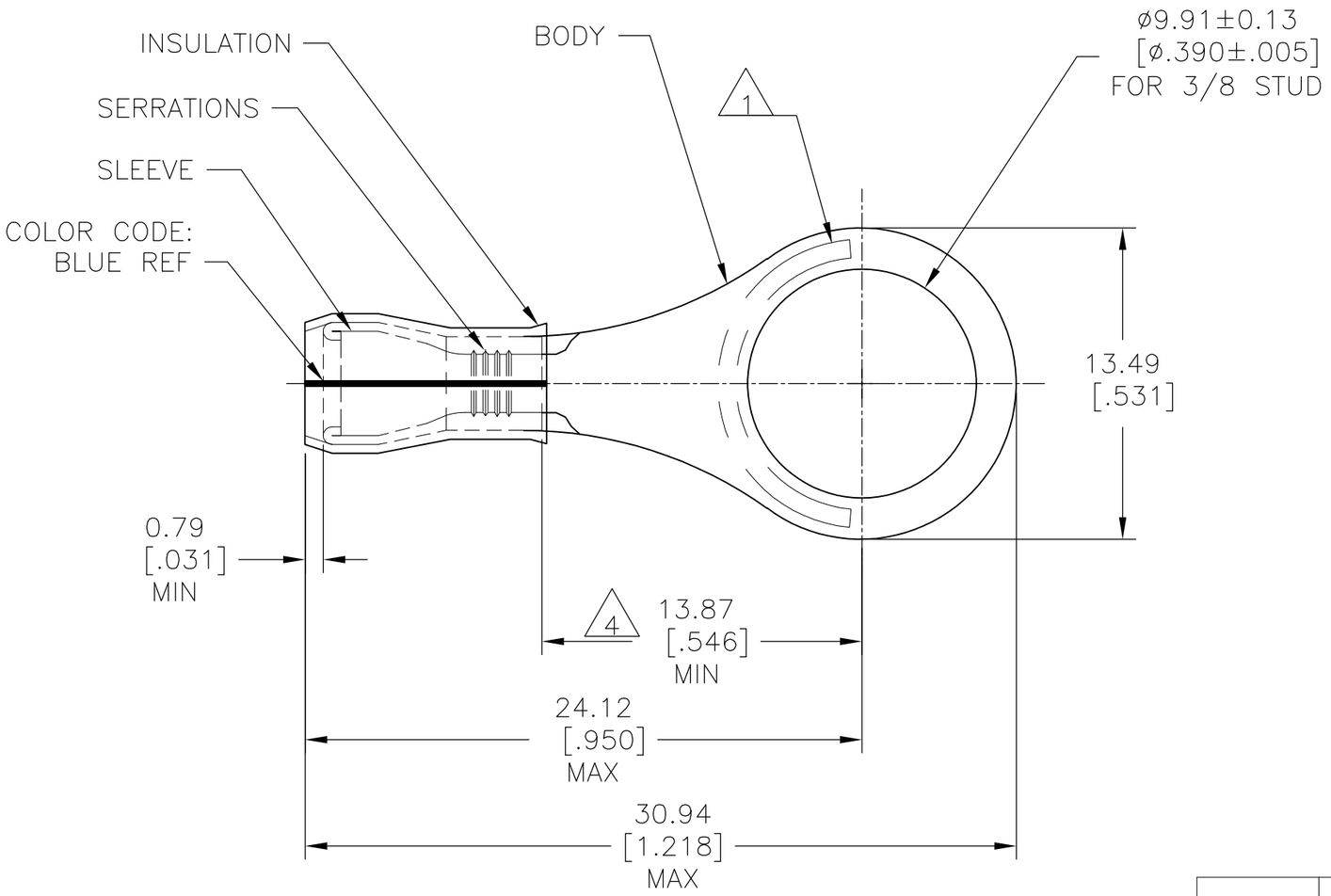

1 STAMP AMP 16-14* APPROX AS SHOWN

2 WIRE INSULATION DIA: 2.67-3.81[.105-.150]

3 TONGUE MATERIAL THK: 0.79±0.05[.031±.002]

4 APPLIES FROM EDGE OF METAL WIRE BARREL TO CENTER OF STUD HOLE.

5 MEETS M7928/4-110, CLASS 1 & 2
MEETS M7928/13-110, CLASS 1 & 2

QTY	PACKAGE TYPE	MATERIAL & FINISH	PART NO
1000	LOOSE PIECE	BODY: COPPER PER ASTM B152 TIN/LEAD (93-7) PLATE PER ASTM B545 (3% MIN LEAD CONTENT) SLEEVE: COPPER PER ASTM B152 TIN/LEAD (93-7) PLATE PER ASTM B545 (3% MIN LEAD CONTENT) INSULATION: PVF2, COLOR-NATURAL	5 53421-1

AMP INCORPORATED
CUSTOMER SERVICE SYSTEMS

FOR ADDITIONAL PRODUCT INFORMATION OR COPIES OF DRAWINGS AND TECHNICAL DOCUMENTS	PRODUCT INFORMATION CENTER 1-800-522-6752
FOR APPLICATION TOOLING INFORMATION	TOOLING ASSISTANCE CENTER 1-800-722-1111
FOR ORDER ENTRY	1-800-526-5142

THIS DRAWING IS A CONTROLLED DOCUMENT FOR AMP INCORPORATED. IT IS SUBJECT TO CHANGE AND THE CONTROLLING ENGINEERING ORGANIZATION SHOULD BE CONTACTED FOR THE LATEST REVISION.

MAX RECOMMENDED OPERATING TEMPERATURE: 150°C [302°F] MAX

VOLTAGE RATING: N/A

CIRCULAR MIL AREA: 1.04-2.62mm² [2,050-5,180] STRANDED

THIS DRAWING IS A CONTROLLED DOCUMENT.

DIMENSIONS: mm [INCHES]

TOLERANCES UNLESS OTHERWISE SPECIFIED:

0 PLC	± -
1 PLC	± -
2 PLC	± -
3 PLC	± 0.20[.008]
4 PLC	± -
ANGLES	± -

MATERIAL: SEE TABLE

FINISH: SEE TABLE

DWN	JR RUTH	25OCT07
CHK	T MICHIELUTTI	25OCT07
APVD	T MICHIELUTTI	25OCT07
PRODUCT SPEC	—	
APPLICATION SPEC	—	
WEIGHT	—	

TE Connectivity

NAME: TERMINAL, RING TONGUE, PVF2 , P.I.D.G. WIRE SIZE: 16-14 AWG

SIZE	CAGE CODE	DRAWING NO	RESTRICTED TO
A3	00779	C-53421	—

CUSTOMER DRAWING | SCALE 4:1 | SHEET 1 OF 1 | REV AA3

1470-19 (3/11)