MICRO SWITCH
FREEPORT, ILLINOIS, U.S.A.
A DIVISION OF HONEYWELL
FED. MFG. CODE 91929

SWITCH — ENCLOSED

CATALOG LISTING
LSQ037

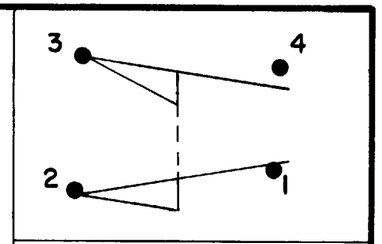

CIRCUIT DIAGRAM

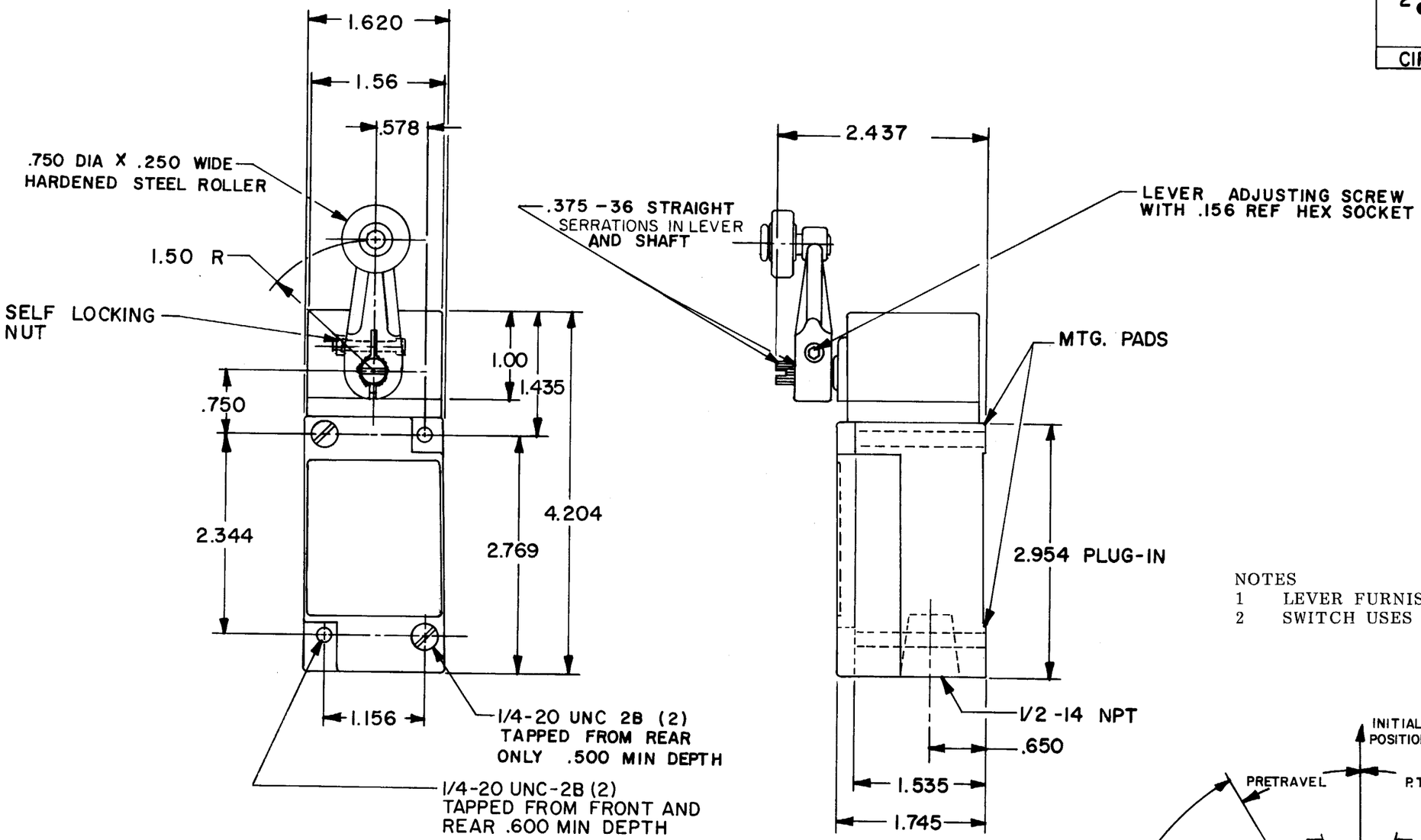

NOTES
1 LEVER FURNISHED UNASSEMBLED
2 SWITCH USES VITON SEALS

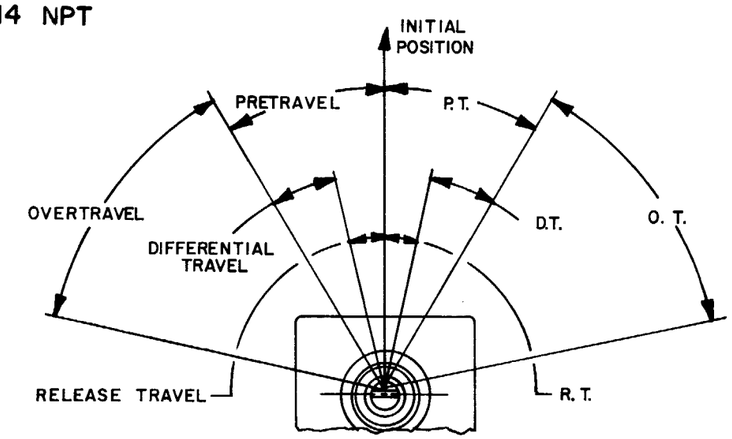

OPERATING DATA — SIDE ROTARY

THIS DRAWING COVERS A PROPRIETARY ITEM AND IS THE PROPERTY OF MICRO SWITCH, A DIVISION OF HONEYWELL. THIS DRAWING IS NOT TO BE COPIED OR USED WITHOUT THE APPROVAL OF MICRO SWITCH.

SCALE NONE
DO NOT SCALE PRINT

TOLERANCES

CHARACTERISTICS	ELECTRICAL DATA
OPERATING TORQUE ---- 4 IN LBS MAX	CONTACT ARRANGEMENT
FULL TRAVEL TORQUE ---- 4 IN LBS MAX	
PRETRAVEL ---------- 9° MAX	
DIFFERENTIAL TRAVEL ---------- 3° MAX	
OVERTRAVEL ---------- 66° MIN	
TOTAL TRAVEL ---------- 75° REF	

WEIGHT

LSQ037
DRAWING NUMBER M
RELEASE NO. PR-3853-T
REPLACES
ISSUE X 2 4 3
CHECK
REVISIONS
A CO 53617 TSK AUG 83
B C060151 JAP AUG 86
C C063742 TSK JUN 88
DRAWN GJW 8 JUN 81
CHECK CEB 17 JUNE 81
CHECK RCB 11 JUNE 81
FO-52851-B