TERMINALS

10-133-X-01

MATERIAL: BRASS
FINISH: SILVER

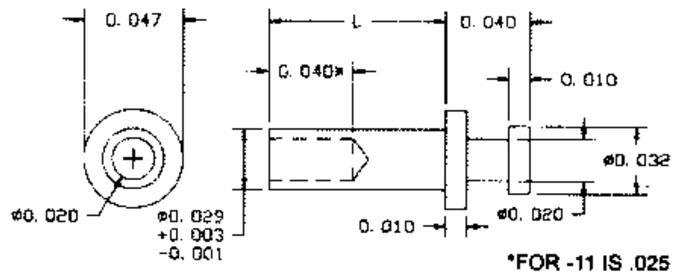

RECOMMENDED MOUNTING HOLE .033 DIA.(#66 DRILL)

PART NO.	L	T
10-133-11	.037	1/64
10-133-1	.053	1/32
10-133-2	.084	1/16
10-133-3	.115	3/32

TOOLS

ANVIL	PUNCH
TA47-32-10	TP30-20

10-121-X-05

MATERIAL: BRASS
FINISH: ELECTRO-SOLDER

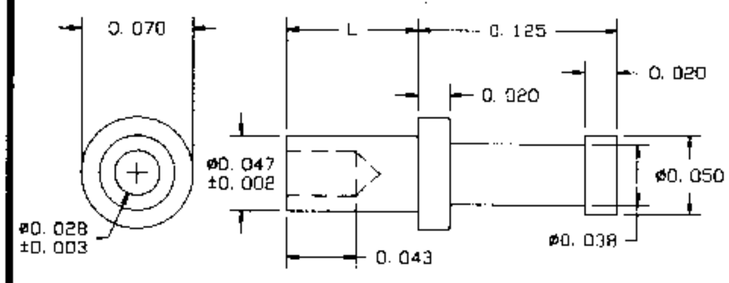

RECOMMENDED MOUNTING HOLE .052 DIA.(#55 DRILL)

PART NO.	L	T
10-121-1	.051	1/32
10-121-2	.082	1/16

TOOLS

ANVIL	PUNCH
TA70-50-20	TP47-26

10-107-X-01

MATERIAL: BRASS
FINISH: SILVER

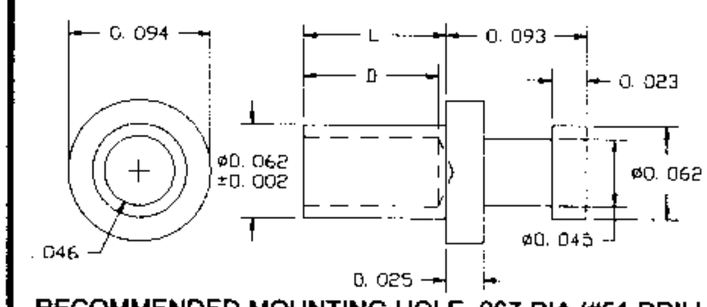

RECOMMENDED MOUNTING HOLE .067 DIA.(#51 DRILL)

PART NO.	L	T	D
10-107-11	.025	1/64	.020
10-107-1	.045	1/32	.040
10-107-2	.094	1/16	.089
10-107-3	.125	3/32	.089
10-107-4	.156	1/8	.089

TOOLS

ANVIL	PUNCH
TA94-62-20	TP62-44

10-115-X-044

MATERIAL: BRASS
FINISH: BRIGHT TIN

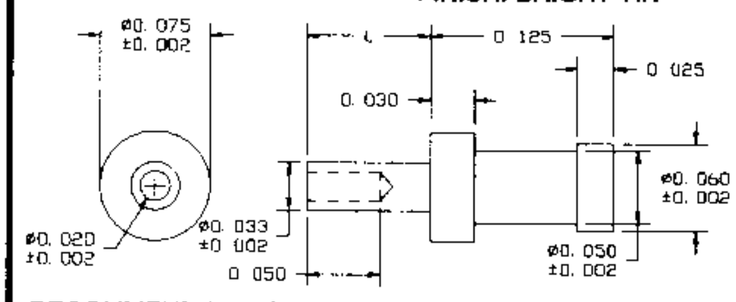

RECOMMENDED MOUNTING HOLE .037 DIA.(#63 DRILL)

PART NO.	L	T
10-115-1	.051	1/32
10-115-2	.084	1/16
10-115-2B	.096	1/16

TOOLS

ANVIL	PUNCH
TA75-60-30	TP30-20

10-120-X-01

MATERIAL: BRASS
FINISH: SILVER

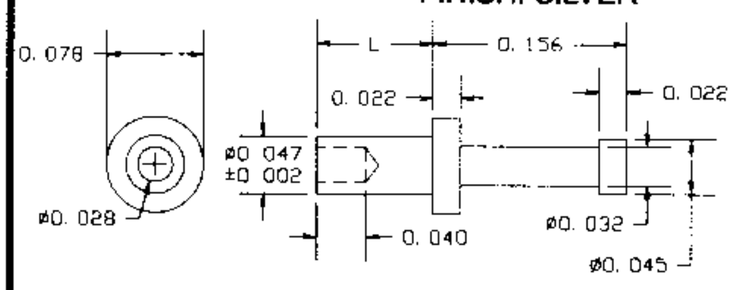

RECOMMENDED MOUNTING HOLE .052 DIA.(#55 DRILL)

PART NO.	L	T
10-120-2	.094	1/16

TOOLS

ANVIL	PUNCH
TA78-45-22	TP47-26

12-117-X-01

MATERIAL: BRASS
FINISH: SILVER

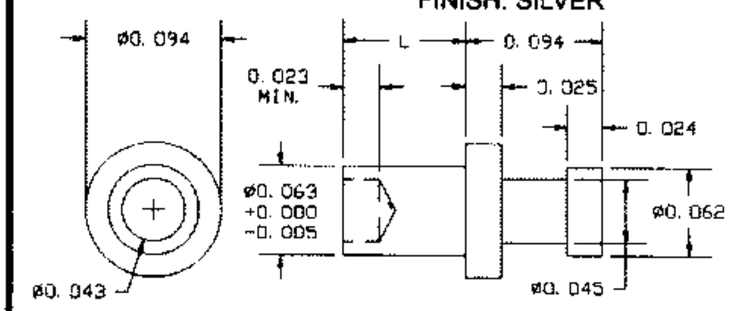

PART NO.	L	T
12-117-11	.037	1/64
12-117-1	.053	1/32
12-117-2	.084	1/16
12-117-3	.115	3/32
12-117-4	.147	1/8

RECOMMENDED MOUNTING HOLE .067 DIA.(#51 DRILL)

TOOLS

ANVIL	PUNCH
TA94-62-20	TP62-44

10-136-X-05

MATERIAL: BRASS
FINISH: ELECTRO-SOLDER

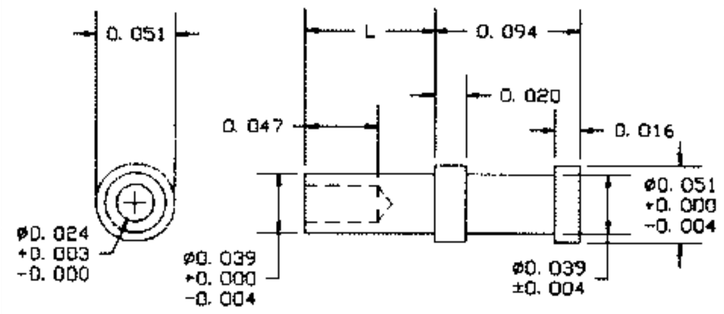

RECOMMENDED MOUNTING HOLE .041 DIA.(#60 DRILL)

PART NO.	L	T
10-136-1	.055	1/32
10-136-2	.084	1/16

ANVIL	PUNCH
TA53-53-94	TP40-25

10-127-1-XX

MATERIAL: BRASS
FINISH: SILVER (01)
FINISH: ELECTRO-SOLDER (05)

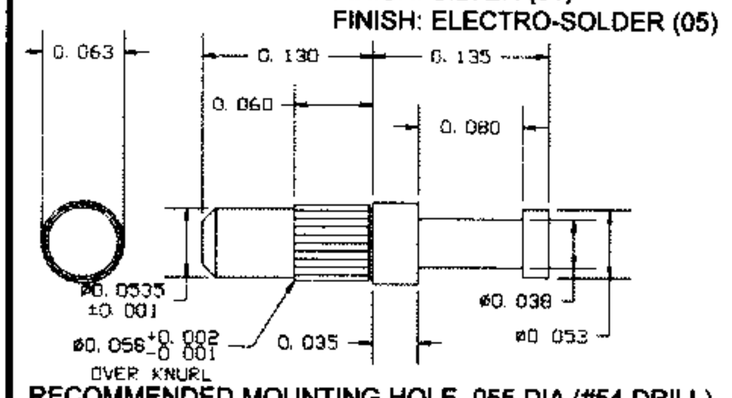

RECOMMENDED MOUNTING HOLE .055 DIA.(#54 DRILL)

PART NO.	L	T
10-127-1	.130	.062 TO .094

10-138-X-XX

MATERIAL: BRASS
FINISH: SILVER (01)
FINISH: ELECTRO-TIN (04)

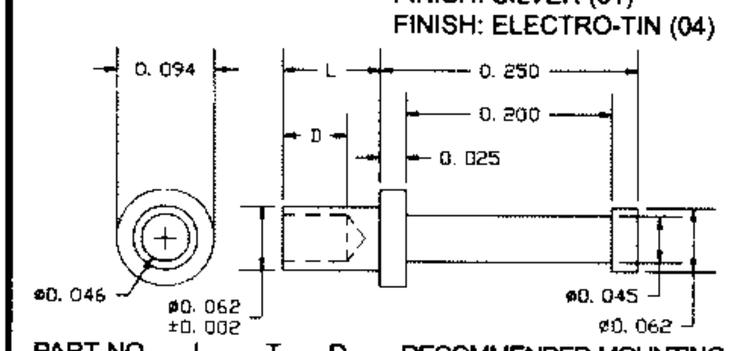

PART NO.	L	T	D
10-138-1	.045	1/32	.040
10-138-2	.094	1/16	.062
10-138-3	.125	3/32	.062
10-138-4	.156	1/8	.062

RECOMMENDED MOUNTING HOLE .067 DIA.(#51 DRILL)

ANVIL	PUNCH
TA94-62-20	TP62-44

12-114-X-01

MATERIAL: BRASS
FINISH: SILVER

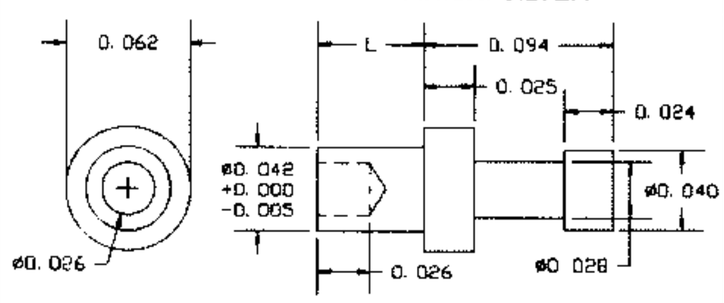

PART NO.	L	T
12-114-11	.037	1/64
12-114-1	.053	1/32
12-114-2	.084	1/16
12-114-3	.115	3/32
12-114-4	.147	1/8

TOOLS

ANVIL	PUNCH
TA62-40-25	TP40-25

10-129-2-04

MATERIAL: BRASS
FINISH: ELECTRO-TIN

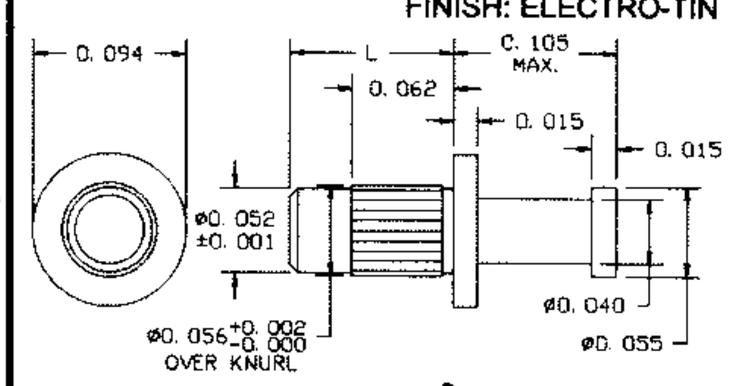

RECOMMENDED MOUNTING HOLE .055 DIA.(#54 DRILL)

PART NO.	L	T
10-129-2	.100	.062

10-101-X-XX

MATERIAL: BRASS
FINISH: SILVER (01)
FINISH: ELECTRO-SOLDER (05)

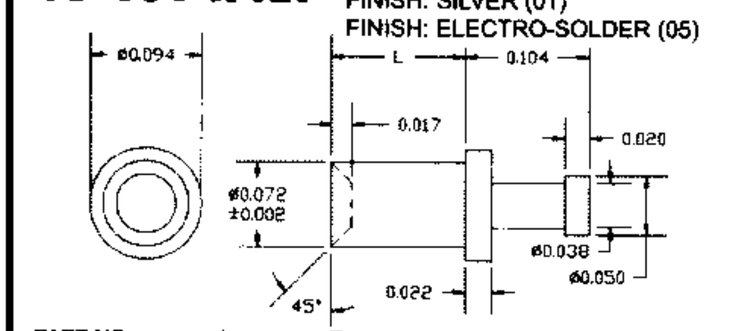

PART NO.	L	T
10-101-1	.051	1/32
10-101-2	.082	1/16
10-101-3	.113	3/32
10-101-4	.145	1/8
10-101-6	.207	3/16
10-101-8	.270	1/4

RECOMMENDED MOUNTING HOLE .076 DIA.(#48 DRILL)

ANVIL	PUNCH
TA94-50-20	TP71-43

10-104-X-XX

MATERIAL: BRASS
FINISH: SILVER (01)
GOLD (03)

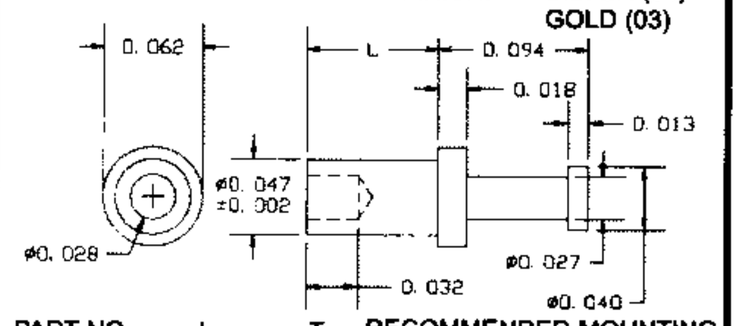

PART NO.	L	T
10-104-11	.035	1/64
10-104-1	.051	1/32
10-104-2	.082	1/16
10-104-3	.113	3/32
10-104-4	.145	1/8

RECOMMENDED MOUNTING HOLE .052 DIA.(#55 DRILL)

ANVIL	PUNCH
TA62-40-18	TP47-26

13-108-X-01

MATERIAL: BRASS
FINISH: SILVER

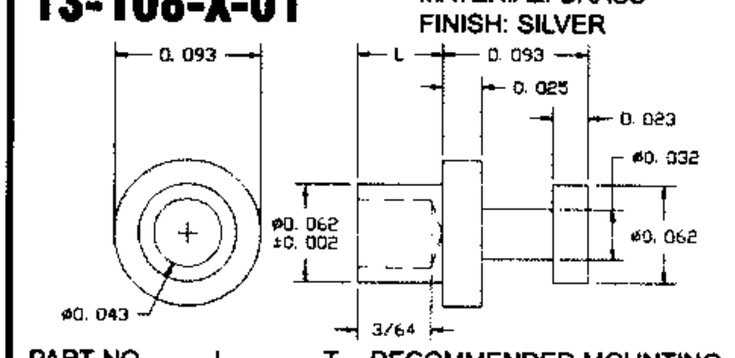

PART NO.	L	T
13-108-11	.037	1/64
13-108-1	.053	1/32
13-108-2	.084	1/16
13-108-3	.115	3/32
13-108-4	.147	1/8

RECOMMENDED MOUNTING HOLE .067 DIA.(#51 DRILL)

ANVIL	PUNCH
TA94-62-20	TP62-44

12-105-X-01

MATERIAL: BRASS
FINISH: SILVER

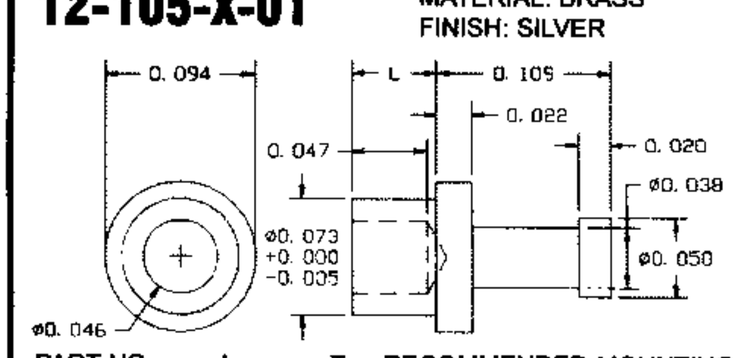

PART NO.	L	T
12-105-11	.037	1/64
12-105-1	.053	1/32
12-105-2	.084	1/16
12-105-3	.115	3/32
12-105-4	.147	1/8

RECOMMENDED MOUNTING HOLE .076 DIA.(#48 DRILL)

ANVIL	PUNCH
TA94-50-20	TP71-43

FOR ADDITIONAL SIZES AND MATERIALS, CONTACT FACTORY

CONCORD®

800-847-4162 (Outside N.Y.S.)
Ph: 212-777-6571 Fax: 212-991-0161
sales@concord-electronics.com
engineering@concord-electronics.com