PART NUMBER	POSITION 1	POSITION 2	POSITION 3	MSL	PAD LAYOUT REFERENCE
593-202020-002F 593-202020-013F	RED	RED	RED	2	FIG. 1
593-202024-002F 593-202024-013F	RED	RED	YELLOW	2	FIG. 1
593-202324-002F 593-202324-013F	RED	GREEN	YELLOW	2	FIG. 1
593-203120-002F 593-203120-013F	RED	YELLOW/ GREEN	RED	2	FIG. 1 & FIG. 2
593-212121-002F 593-212121-013F	AlGaAs RED	AlGaAs RED	AlGaAs RED	2	FIG. 1
593-212130-002F 593-212130-013F	AlGaAs RED	AlGaAs RED	SUPER-RED/ GREEN	2	FIG. 1 & FIG. 2
593-222221-002F 593-222221-013F	HI. INT. GREEN	HI. INT. GREEN	AlGaAs RED	2	FIG. 1
593-222222-002F 593-222222-013F	HI. INT. GREEN	HI. INT. GREEN	HI. INT. GREEN	2	FIG. 1
593-232323-002F 593-232323-013F	GREEN	GREEN	GREEN	2	FIG. 1
593-232424-002F 593-232424-013F	GREEN	YELLOW	YELLOW	2	FIG. 1
593-232627-002F 593-232627-013F	GREEN	BLUE	AlInGaP YELLOW	2	FIG. 1
593-242320-002F 593-242320-013F	YELLOW	GREEN	RED	2	FIG. 1
593-242424-002F 593-242424-013F	YELLOW	YELLOW	YELLOW	2	FIG. 1
593-262626-002F 593-262626-013F	BLUE	BLUE	BLUE	2	FIG. 1
593-272129-002F 593-272129-013F	AlInGaP YELLOW	AlGaAs RED	InGaN GREEN	2a	FIG. 1
593-272727-002F 593-272727-013F	AlInGaP YELLOW	AlInGaP YELLOW	AlInGaP YELLOW	2	FIG. 1
593-282828-002F 593-282828-013F	WHITE	WHITE	WHITE	2	FIG. 1
593-292929-002F 593-292929-013F	InGaN GREEN	InGaN GREEN	InGaN GREEN	2a	FIG. 1
593-303030-002F 593-303030-013F	SUPER-RED/ GREEN	SUPER-RED/ GREEN	SUPER-RED/ GREEN	2	FIG. 2
593-313131-002F 593-313131-013F	YELLOW/ GREEN	YELLOW/ GREEN	YELLOW/ GREEN	2	FIG. 2
593-323232-002F 593-323232-013F	SUPER-RED/ YELLOW	SUPER-RED/ YELLOW	SUPER-RED/ YELLOW	2	FIG. 2
593-353535-002F 593-353535-013F	BLUE/ GREEN/ RED	BLUE/ GREEN/ RED	BLUE/ GREEN/ RED	2a	FIG. 2

593-XXXXXX-002F
PACKAGING SPECIFICATION

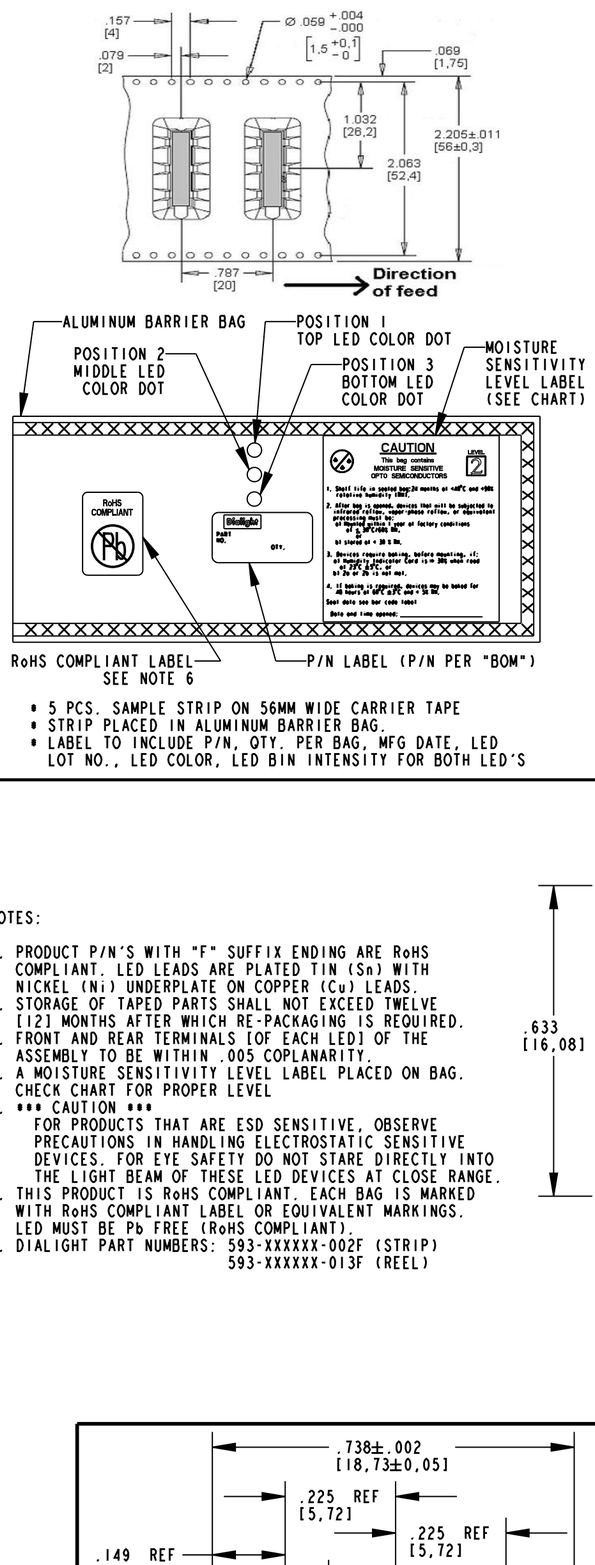

- 5 PCS. SAMPLE STRIP ON 56MM WIDE CARRIER TAPE
- STRIP PLACED IN ALUMINUM BARRIER BAG.
- LABEL TO INCLUDE P/N, QTY. PER BAG, MFG DATE, LED LOT NO., LED COLOR, LED BIN INTENSITY FOR BOTH LED'S

593-XXXXXX-013F
PACKAGING SPECIFICATION

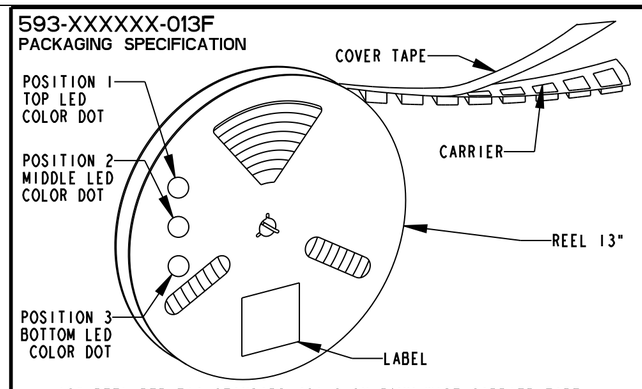

- 13" REEL PER EIA STANDARD 481-2 ON 56MM WIDE CARRIER TAPE
- QUANTITY = 150 Pcs/REEL IN VACUUM SEALED BAG
- LABEL AND COLOR DOTS ON REEL AND ON BAG
- LABEL TO INCLUDE P/N , QTY. PER BAG , MFG DATE LED LOT No , LED COLOR , LED BIN INTENSITY FOR ALL LED'S CORNER OF LABEL ON REEL INDICATES MOISTURE SENSITIVITY LEVEL ALUMINUM BARRIER BAG INCLUDES MSL LABEL

REV	ECN NO	REVISIONS	DRN	CKD	APP	DATE
A	——	NEW RELEASE	OO	N.O.	MS	3-28-07
B	——	ADDED P/N'S 593-222221-002F,-013F, 593-272129-002F,-013F,593-292929-002F,-013F, ADDED INTENSITY SPECS, ADDED PIN REFERENCES.	KLJ	N.O.	MES	3-24-08
C	——	ADDED P/N'S 593-242320-002F,-013F; AND 593-232424-002F,-013F; MSL FOR 593-292929-0XXF & 593-353535-0XXF WAS "2"; UPDATED SPECS; CHANGED NOTE 7.	KLJ	N.O.	MES	1-15-09
D	——	ADDED P/N'S 593-202324-002F, -013F.	KLJ	N.O.	MES	1-26-09
E	——	ADDED P/N'S 593-203120-002F, -013F.	KLJ	NO	MES	2-19-09
F	——	ADDED P/N'S 593-232627-002F, -013F.	AJF	KLJ	NO	7-1-09

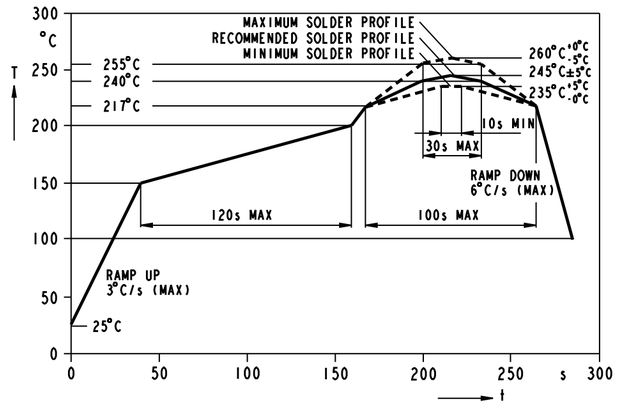

RECOMMENDED RoHS COMPLIANT REFLOW PROFILE

MULIT-COLOR LED PIN REFERENCES				
LED COLOR	PIN 1	PIN 2	PIN 3	PIN 4
R/Y BI-COLOR	RED CATHODE	RED ANODE	YELLOW ANODE	YELLOW CATHODE
Y/G BI-COLOR	YELLOW CATHODE	YELLOW ANODE	GREEN ANODE	GREEN CATHODE
R/G BI-COLOR	RED CATHODE	RED ANODE	GREEN ANODE	GREEN CATHODE
R/G/B TRI-COLOR	RED CATHODE	COMMON ANODE	GREEN CATHODE	BLUE CATHODE

OPERATING CHARACTERISTICS AT 25°C AMBIENT								
COLOR		LUMINOUS INTENSITY @If=20mA	FORWARD VOLTAGE (V)			DOMINANT WAVELENGTH (nm)		
		TYP	TEST COND	TYP	MAX	MIN	TYP	MAX
RED		6 mcd	If = 10mA	2.0	2.5	622	628	634
AlGaAs RED		29 mcd	If = 10mA	1.75	2.5	—	645	—
HI. INT. GREEN		16 mcd	If = 10mA	2.0	2.5	564	570	576
GREEN		11 mcd	If = 10mA	2.0	2.5	564	570	576
YELLOW		11 mcd	If = 10mA	2.0	2.5	580	587	595
BLUE		7 mcd	If = 10mA	3.5	4.2	462	465	468
AlInGaP YELLOW		80 mcd	If = 10mA	2.0	2.4	580	587	595
WHITE		85 mcd	If = 10mA	3.1	3.7	—	X .33 Y .33	—
InGaN GREEN		150 mcd	If = 20mA	3.4	4.05	515	525	535
RED/GREEN BI-COLOR	RED	7 mcd	If = 10mA	2.0	2.5	622	628	634
	GREEN	10 mcd	If = 10mA	2.0	2.5	564	570	576
YELLOW/GREEN BI-COLOR	YELLOW	6 mcd	If = 10mA	2.0	2.5	584	590	596
	GREEN	10 mcd	If = 10mA	2.0	2.5	564	570	576
RED/YELLOW BI-COLOR	RED	45 mcd	If = 20mA	2.0	2.3	627	633	639
	YELLOW	70 mcd	If = 20mA	2.0	2.4	580	587	595
RED/GRN/BLUE TRI-COLOR	RED	35 mcd	If = 20mA	1.9	2.4	—	626	—
	GREEN	70 mcd	If = 20mA	3.4	4.05	515	525	535
	BLUE	20 mcd	If = 20mA	3.4	4.05	460	470	480

NOTES:

1. PRODUCT P/N'S WITH "F" SUFFIX ENDING ARE RoHS COMPLIANT. LED LEADS ARE PLATED TIN (Sn) WITH NICKEL (Ni) UNDERPLATE ON COPPER (Cu) LEADS.
2. STORAGE OF TAPED PARTS SHALL NOT EXCEED TWELVE [12] MONTHS AFTER WHICH RE-PACKAGING IS REQUIRED.
3. FRONT AND REAR TERMINALS [OF EACH LED] OF THE ASSEMBLY TO BE WITHIN .005 COPLANARITY.
4. A MOISTURE SENSITIVITY LEVEL LABEL PLACED ON BAG. CHECK CHART FOR PROPER LEVEL
5. *** CAUTION ***
   FOR PRODUCTS THAT ARE ESD SENSITIVE, OBSERVE PRECAUTIONS IN HANDLING ELECTROSTATIC SENSITIVE DEVICES. FOR EYE SAFETY DO NOT STARE DIRECTLY INTO THE LIGHT BEAM OF THESE LED DEVICES AT CLOSE RANGE.
6. THIS PRODUCT IS RoHS COMPLIANT. EACH BAG IS MARKED WITH RoHS COMPLIANT LABEL OR EQUIVALENT MARKINGS. LED MUST BE Pb FREE (RoHS COMPLIANT).
7. DIALIGHT PART NUMBERS: 593-XXXXXX-002F (STRIP)
   593-XXXXXX-013F (REEL)

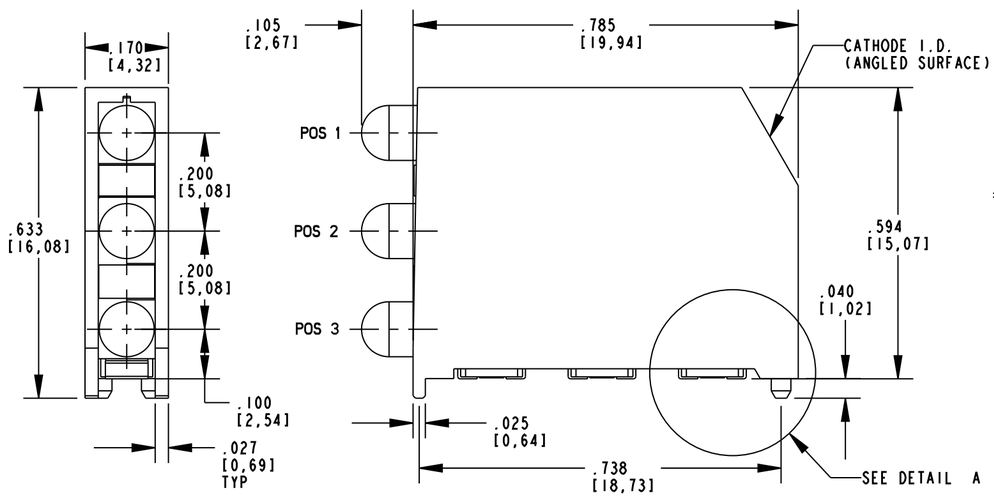

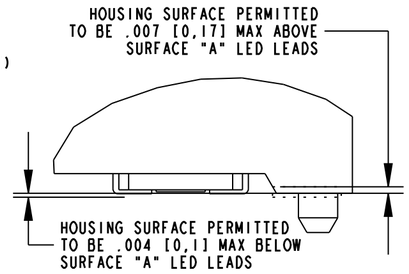

DETAIL A
SCALE 8.000

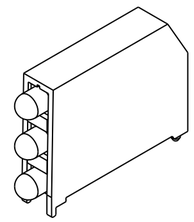

SCALE 2.000

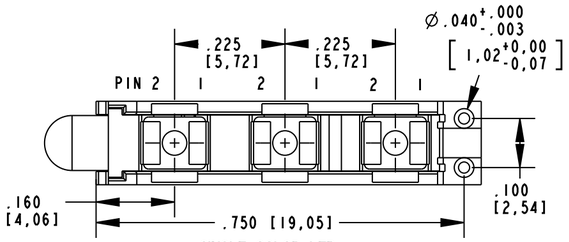

SINGLE COLOR LED

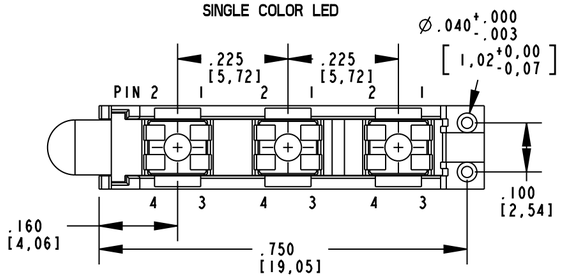

BI-COLOR LED & TRI-COLOR LED

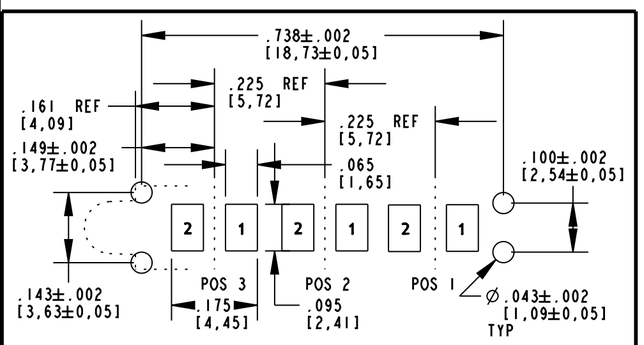

PIN 1 = CATHODE; PIN 2 = ANODE

FIG. 1 RECOMMENDED PAD LAYOUT - SINGLE COLOR LEDS

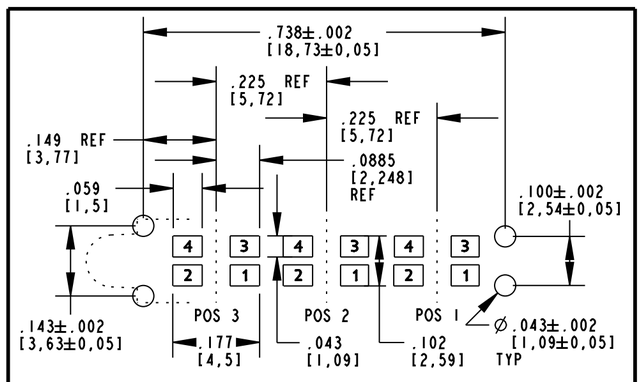

FOR MULTI-COLOR LED PIN REFERENCES, SEE TABLE

FIG. 2 RECOMMENDED PAD LAYOUT - MULTI-COLOR LEDS

ATTENTION:
OBSERVE PRECAUTIONS FOR HANDLING ELECTROSTATIC SENSITIVE DEVICES

THIS DRAWING AND THE CONTENTS HEREIN ARE CONFIDENTIAL AND THE SOLE PROPERTY OF DIALIGHT. REPRODUCTION OF THIS DRAWING OR CONSTRUCTION OF ANY PARTS WITHIN THIS DRAWING ARE FORBIDDEN WITHOUT THE WRITTEN CONSENT OF DIALIGHT.

SCALE: 4.000	DRAWING NUMBER C-17270	REV F
ALL DIM'S IN: INCHES (MM)		
TOLERANCES: UNLESS OTHERWISE SPECIFIED FRACTIONS: ±1/64 DECIMALS (.XX): ±.02 DECIMALS (.XXX): ±.015 ANGLES: ±3°	TITLE TRI-LEVEL PRISM	
	MATERIAL RoHS COMPLIANT	
FINISH: -	Dialight 1501 ROUTE 34 SOUTH FARMINGDALE, NJ 07727	
FSCM 83330	SHEET 1 OF 1	FAMILY TABLE: