THIS DRAWING IS UNPUBLISHED — RELEASED FOR PUBLICATION 2011
© COPYRIGHT 2011 TE Connectivity — ALL RIGHTS RESERVED.

PROJECT NO	LOC	DIST
EGATN09356	AI	-

REVISIONS

P	LTR	DESCRIPTION	DATE	DWN	APVD
	F2	PART-NO. 5-2112780-0 ADDED	02MAR2018	RM	PNI
	F3	REVISIONS-TABLE ADAPTED	11JUN2018	RM	PNI
	F4	NEW VERSION ADDED	24AUG2023	KG	PNI
	F5	NOTE 7: TYPO ERROR CORRECTED AS 114-18801	10DEC2024	AN	PNI

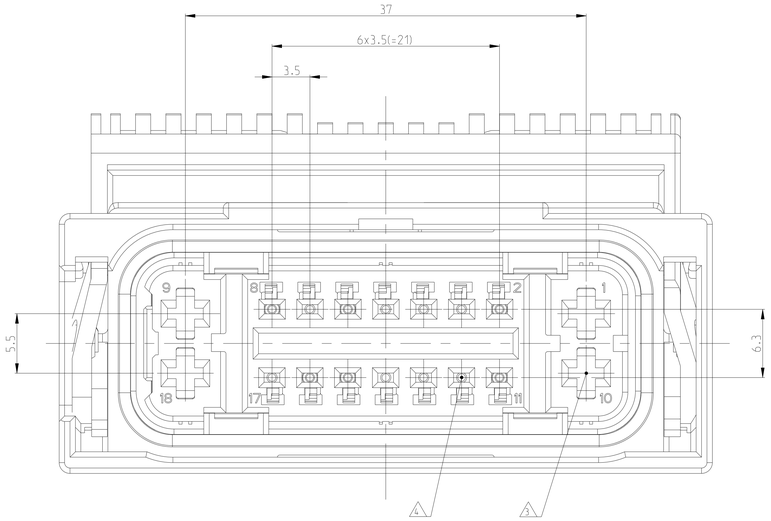

6 DELIVERY CONDITION
Anlieferungszustand
2:1

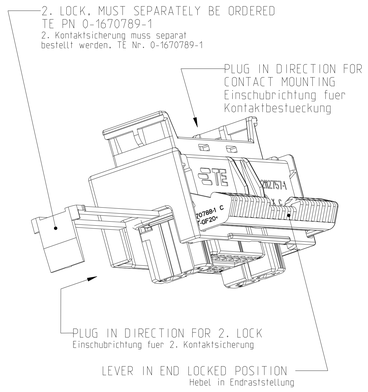

INSTALLATION POSITION ACCORDING INSERTION OF THE CONTACTS AND THE 2.LOCK
Einbaustellung nach der Bestueckung von den
Kontakten und der 2. Kontaktsicherung

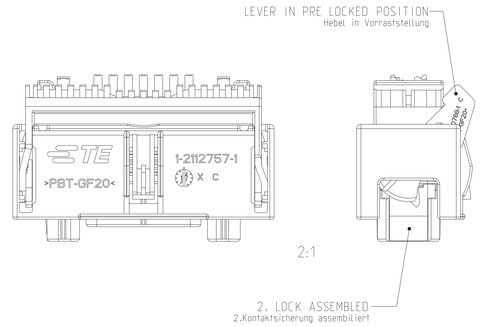

COVER FOR HOUSING LOOSE PIECE TE PN 0-2112758-1 OPTIONAL LEFT OR RIGHT CLIP-ON
Abdeckkappe fuer Buchsengehaeuse wird
separat beigestellt TE NR. 0-2112758-1
Abdeckkappe optional links oder rechts aufsteckbar

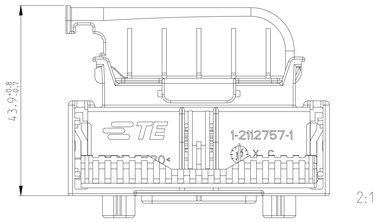

LEFT / links
1:1

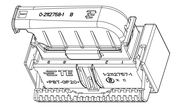

RIGHT / rechts
1:1

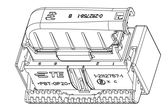

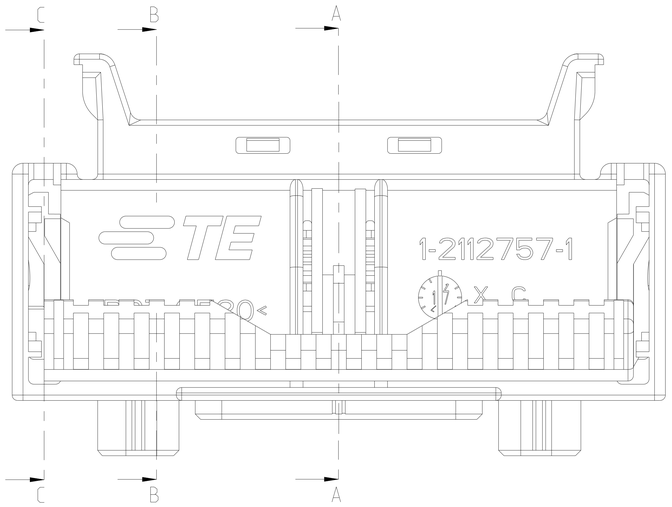

B-B

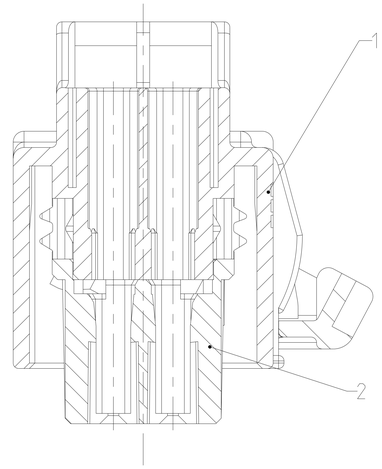

A-A

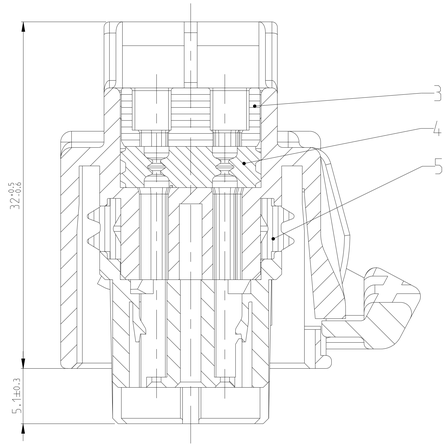

8 INSTALLATION POSITION ACC.INSERTION OF THE CONTACTS/BLIND PLUG AND THE 2.LOCK
Einbaustellung nach der Bestueckung von
den Kontakten/Blindstopfen und der 2. Kontaktsicherung

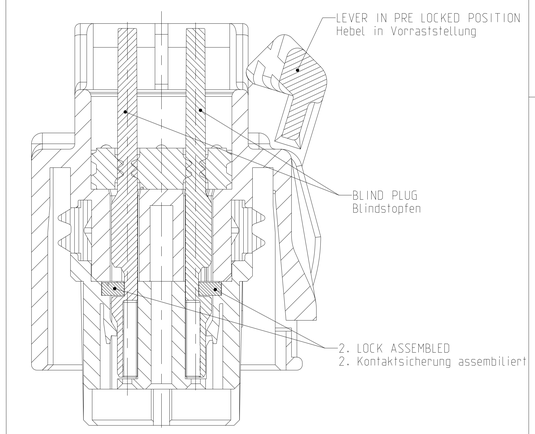

F-F

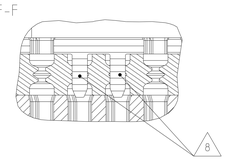

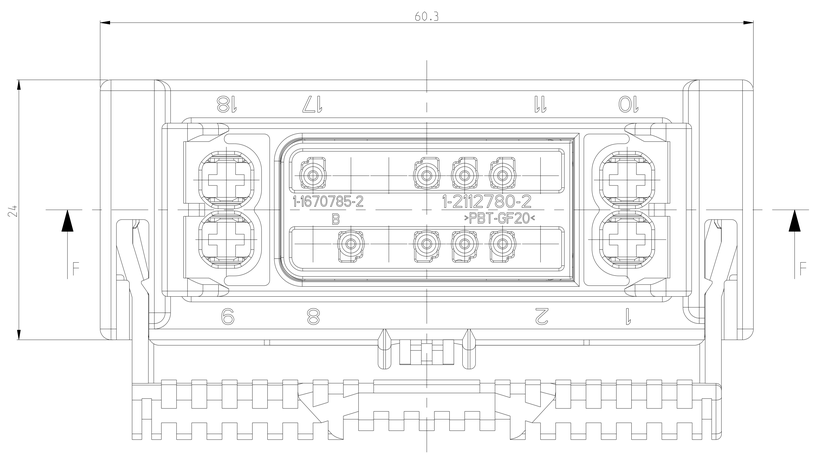

C-C

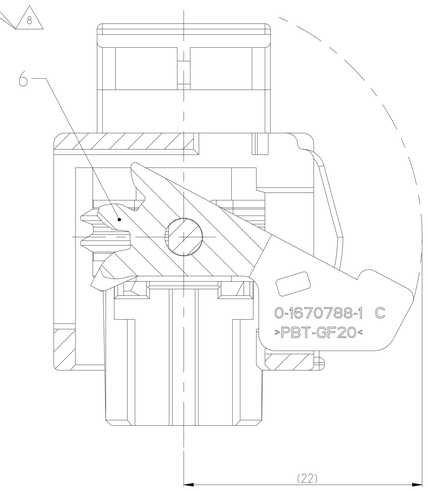

NOTES:
Bemerkungen:

1 PACKAGING: LOOSE PIECE INTO CARTON
Verpackung: Schuettgut in Karton

2 2.LOCK SEE TE DRAWING NO.1670789
COVER SEE TE DRAWING NO.2112758
2.Kontaktsicherung siehe TE Zeichnung Nr.1670789
Abdeckkappe siehe TE Zeichnung Nr.2112758

3 CAVITY 1, 9, 10 AND 18 SUITABLE FOR CONTACT:
2.8mm SENSOR FLAT CONTACT
0967543 (STRIP) OR 0967717 (LOOSE PIECE) >1.5mm² TO 2.5mm²
AND 0828905 (SINGLE WIRE SEAL) INSULATION DIA. 2.2mm TO 3.0mm

Kammer 1, 9, 10 und 18 passend fuer Kontakt:
2.8mm Sensor Flachkontakt
0967543 (Band) oder 0967717 (vereinzelt) >1.5mm² bis 2.5mm²
und 0828905 (Einzeldichtung) Isolationsdurchmesser 2.2mm bis 3.0mm

4 CAVITY 2 TO 8 AND 11 TO 17 SUITABLE FOR CONTACT:
MCON-1.2 CLEAN BODY
1534594 (STRIP) OR 1534595 (LOOSE PIECE) 0.35mm²
INSULATION DIA. 1.1mm TO 1.75mm
1670144 (STRIP) OR 1670145 (LOOSE PIECE) 0.5mm² TO 0.75mm²
INSULATION DIA. 1.4mm TO 1.9mm

Kammer 2 bis 8 und 11 bis 17 passend fuer Kontakt:
MCON-1.2 CLEAN BODY
1534594 (Band) und 1534595 (vereinzelt) 0.35mm²
Isolationsdurchmesser 1.1mm bis 1.75mm
1670144 (Band) und 1670145 (vereinzelt) 0.5mm² bis 0.75mm²
Isolationsdurchmesser 1.4mm bis 1.9mm

5 CONTACT SUFACE ACCORDING TO MATING CONNECTOR
Kontaktoberflaeche entsprechend dem Gegenstecker

ORDER OF ASSEMBLY:
1.) CONTACT MOUNTING
2.) 2.LOCK MOUNTING
3.) LEVER IN PRE LOCKED POSITION
4.) OPTIONAL COVER

6 Reienfolge der Bestueckung:
1.) Kontaktbestueckung
2.) 2.Kontaktsicherung assemblieren
3.) Hebel in Vorraststellung
4.) Optional Abdeckkappe

F5 7 INTERFACE DRAWING NO.114-18801
Schnittstellenzeichnung Nr.114-18801

8 SUITABLE BLIND PLUG FOR THE CAVITYS 2 TO 8 AND 11 TO 17
SEE TE PART-NO.2286476-1
Passender Blindstopfen fuer die Kammern 2 bis 8 und 11 bis 17
siehe TE Teile-Nr.2286476-1

1:1

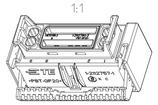

AS SHOWN (DELIVERY CONDITION)
1- -2
WIE GEZEICHNET (Anlieferungszustand)

THIS DRAWING IS A CONTROLLED DOCUMENT.	DWN P.Nickelfeld 15MAR2010	TE Connectivity	
DIMENSIONS: mm	CHK J.Ryll 09APR2010	NAME 18POS. MIXED REC HSG. ASSY 18polig Buchsengehaeuse Assy	
TOLERANCES UNLESS OTHERWISE SPECIFIED: ANGLES ±1° LINEAR: 0.0-10.0 ±0.1 10.0-100.0 ±0.2	APVD D.Duenkel 09APR2010		
	PRODUCT SPEC 108-94094		
	APPLICATION SPEC 114-18853	SIZE A0 / CAGE CODE 00779 / DRAWING NO C-2112780	RESTRICTED TO
MATERIAL - / FINISH -	WEIGHT -		
	CUSTOMER DRAWING	SCALE 5:1 / SHEET 1 OF 2	REV F5

THIS DRAWING IS UNPUBLISHED | RELEASED FOR PUBLICATION 2011
© COPYRIGHT 2011 TE Connectivity | ALL RIGHTS RESERVED.

PROJECT NO	LOC	DIST
EGATN09356	A1	-

REVISIONS

P	LTR	DESCRIPTION	DATE	DWN	APVD
	-	SEE SHEET 1	-	-	-

COD.	REV.	TE ASSY NO.	CLOSED CAVITYS	VERSION	QTY	DESCRIPTION	MATERIAL	COLOUR	ITEM NO
A	F	4-2112780-6	12 16	AH	1	LEVER	PBT-GF20	BLACK	6
					1	RADIAL SEAL	ELASTOSIL	NATURE	5
					1	FAMILY SEAL, MCON-1.2 CB	ELASTOSIL	NATURE	4
					1	COVER FAMILY SEAL, MCON-1.2 CB	PBT-GF20	BLACK	3
					1	18POS. MIXED REC HSG, LOWER PART	PBT-GF30	BLACK	2
					1	18POS. MIXED REC HSG, UPPER PART	PBT-GF20	BLACK	1
A	F	4-2112780-5	3 12 16	AG	1	LEVER	PBT-GF20	BLACK	6
					1	RADIAL SEAL	ELASTOSIL	NATURE	5
					1	FAMILY SEAL, MCON-1.2 CB	ELASTOSIL	NATURE	4
					1	COVER FAMILY SEAL, MCON-1.2 CB	PBT-GF20	BLACK	3
					1	18POS. MIXED REC HSG, LOWER PART	PBT-GF30	BLACK	2
					1	18POS. MIXED REC HSG, UPPER PART	PBT-GF20	BLACK	1
A	F	4-2112780-4	3 12 14 16	AF	1	LEVER	PBT-GF20	BLACK	6
					1	RADIAL SEAL	ELASTOSIL	NATURE	5
					1	FAMILY SEAL, MCON-1.2 CB	ELASTOSIL	NATURE	4
					1	COVER FAMILY SEAL, MCON-1.2 CB	PBT-GF20	BLACK	3
					1	18POS. MIXED REC HSG, LOWER PART	PBT-GF30	BLACK	2
					1	18POS. MIXED REC HSG, UPPER PART	PBT-GF20	BLACK	1
A	F	4-2112780-3	5 6 7 15 16	AD	1	LEVER	PBT-GF20	BLACK	6
					1	RADIAL SEAL	ELASTOSIL	NATURE	5
					1	FAMILY SEAL, MCON-1.2 CB	ELASTOSIL	NATURE	4
					1	COVER FAMILY SEAL, MCON-1.2 CB	PBT-GF20	BLACK	3
					1	18POS. MIXED REC HSG, LOWER PART	PBT-GF30	BLACK	2
					1	18POS. MIXED REC HSG, UPPER PART	PBT-GF20	BLACK	1
A	F	4-2112780-2	2 8 11 15	AC	1	LEVER	PBT-GF20	BLACK	6
					1	RADIAL SEAL	ELASTOSIL	NATURE	5
					1	FAMILY SEAL, MCON-1.2 CB	ELASTOSIL	NATURE	4
					1	COVER FAMILY SEAL, MCON-1.2 CB	PBT-GF20	BLACK	3
					1	18POS. MIXED REC HSG, LOWER PART	PBT-GF30	BLACK	2
					1	18POS. MIXED REC HSG, UPPER PART	PBT-GF20	BLACK	1
A	F	4-2112780-1	2 3 11 16	AB	1	LEVER	PBT-GF20	BLACK	6
					1	RADIAL SEAL	ELASTOSIL	NATURE	5
					1	FAMILY SEAL, MCON-1.2 CB	ELASTOSIL	NATURE	4
					1	COVER FAMILY SEAL, MCON-1.2 CB	PBT-GF20	BLACK	3
					1	18POS. MIXED REC HSG, LOWER PART	PBT-GF30	BLACK	2
					1	18POS. MIXED REC HSG, UPPER PART	PBT-GF20	BLACK	1
A	F	4-2112780-0	16	AA	1	LEVER	PBT-GF20	BLACK	6
					1	RADIAL SEAL	ELASTOSIL	NATURE	5
					1	FAMILY SEAL, MCON-1.2 CB	ELASTOSIL	NATURE	4
					1	COVER FAMILY SEAL, MCON-1.2 CB	PBT-GF20	BLACK	3
					1	18POS. MIXED REC HSG, LOWER PART	PBT-GF30	BLACK	2
					1	18POS. MIXED REC HSG, UPPER PART	PBT-GF20	BLACK	1
A	F	3-2112780-9	5 8 15 16 17	Y	1	LEVER	PBT-GF20	BLACK	6
					1	RADIAL SEAL	ELASTOSIL	NATURE	5
					1	FAMILY SEAL, MCON-1.2 CB	ELASTOSIL	NATURE	4
					1	COVER FAMILY SEAL, MCON-1.2 CB	PBT-GF20	BLACK	3
					1	18POS. MIXED REC HSG, LOWER PART	PBT-GF30	BLACK	2
					1	18POS. MIXED REC HSG, UPPER PART	PBT-GF20	BLACK	1
A	F	3-2112780-8	11	N	1	LEVER	PBT-GF20	BLACK	6
					1	RADIAL SEAL	ELASTOSIL	NATURE	5
					1	FAMILY SEAL, MCON-1.2 CB	ELASTOSIL	NATURE	4
					1	COVER FAMILY SEAL, MCON-1.2 CB	PBT-GF20	BLACK	3
					1	18POS. MIXED REC HSG, LOWER PART	PBT-GF30	BLACK	2
					1	18POS. MIXED REC HSG, UPPER PART	PBT-GF20	BLACK	1
A	F	3-2112780-7	2 11 12	M	1	LEVER	PBT-GF20	BLACK	6
					1	RADIAL SEAL	ELASTOSIL	NATURE	5
					1	FAMILY SEAL, MCON-1.2 CB	ELASTOSIL	NATURE	4
					1	COVER FAMILY SEAL, MCON-1.2 CB	PBT-GF20	BLACK	3
					1	18POS. MIXED REC HSG, LOWER PART	PBT-GF30	BLACK	2
					1	18POS. MIXED REC HSG, UPPER PART	PBT-GF20	BLACK	1
A	F	3-2112780-6	2 11 12 14 16	X	1	LEVER	PBT-GF20	BLACK	6
					1	RADIAL SEAL	ELASTOSIL	NATURE	5
					1	FAMILY SEAL, MCON-1.2 CB	ELASTOSIL	NATURE	4
					1	COVER FAMILY SEAL, MCON-1.2 CB	PBT-GF20	BLACK	3
					1	18POS. MIXED REC HSG, LOWER PART	PBT-GF30	BLACK	2
					1	18POS. MIXED REC HSG, UPPER PART	PBT-GF20	BLACK	1
A	F	3-2112780-5	4 15 16	W	1	LEVER	PBT-GF20	BLACK	6
					1	RADIAL SEAL	ELASTOSIL	NATURE	5
					1	FAMILY SEAL, MCON-1.2 CB	ELASTOSIL	NATURE	4
					1	COVER FAMILY SEAL, MCON-1.2 CB	PBT-GF20	BLACK	3
					1	18POS. MIXED REC HSG, LOWER PART	PBT-GF30	BLACK	2
					1	18POS. MIXED REC HSG, UPPER PART	PBT-GF20	BLACK	1
A	F	3-2112780-4	2 15 16	V	1	LEVER	PBT-GF20	BLACK	6
					1	RADIAL SEAL	ELASTOSIL	NATURE	5
					1	FAMILY SEAL, MCON-1.2 CB	ELASTOSIL	NATURE	4
					1	COVER FAMILY SEAL, MCON-1.2 CB	PBT-GF20	BLACK	3
					1	18POS. MIXED REC HSG, LOWER PART	PBT-GF30	BLACK	2
					1	18POS. MIXED REC HSG, UPPER PART	PBT-GF20	BLACK	1
A	F	3-2112780-3	2 6 11 15	U	1	LEVER	PBT-GF20	BLACK	6
					1	RADIAL SEAL	ELASTOSIL	NATURE	5
					1	FAMILY SEAL, MCON-1.2 CB	ELASTOSIL	NATURE	4
					1	COVER FAMILY SEAL, MCON-1.2 CB	PBT-GF20	BLACK	3
					1	18POS. MIXED REC HSG, LOWER PART	PBT-GF30	BLACK	2
					1	18POS. MIXED REC HSG, UPPER PART	PBT-GF20	BLACK	1
A	F	3-2112780-2	2 11 16	T	1	LEVER	PBT-GF20	BLACK	6
					1	RADIAL SEAL	ELASTOSIL	NATURE	5
					1	FAMILY SEAL, MCON-1.2 CB	ELASTOSIL	NATURE	4
					1	COVER FAMILY SEAL, MCON-1.2 CB	PBT-GF20	BLACK	3
					1	18POS. MIXED REC HSG, LOWER PART	PBT-GF30	BLACK	2
					1	18POS. MIXED REC HSG, UPPER PART	PBT-GF20	BLACK	1
A	F	3-2112780-1	2 11	S	1	LEVER	PBT-GF20	BLACK	6
					1	RADIAL SEAL	ELASTOSIL	NATURE	5
					1	FAMILY SEAL, MCON-1.2 CB	ELASTOSIL	NATURE	4
					1	COVER FAMILY SEAL, MCON-1.2 CB	PBT-GF20	BLACK	3
					1	18POS. MIXED REC HSG, LOWER PART	PBT-GF30	BLACK	2
					1	18POS. MIXED REC HSG, UPPER PART	PBT-GF20	BLACK	1
A	F	5-2112780-1	5 7 8 16 17	AN	1	LEVER	PBT-GF20	BLACK	6
					1	RADIAL SEAL	ELASTOSIL	NATURE	5
					1	FAMILY SEAL, MCON-1.2 CB	ELASTOSIL	NATURE	4
					1	COVER FAMILY SEAL, MCON-1.2 CB	PBT-GF20	BLACK	3
					1	18POS. MIXED REC HSG, LOWER PART	PBT-GF30	BLACK	2
					1	18POS. MIXED REC HSG, UPPER PART	PBT-GF20	BLACK	1
A	F	5-2112780-0	2 3 11 12	AM	1	LEVER	PBT-GF20	BLACK	6
					1	RADIAL SEAL	ELASTOSIL	NATURE	5
					1	FAMILY SEAL, MCON-1.2 CB	ELASTOSIL	NATURE	4
					1	COVER FAMILY SEAL, MCON-1.2 CB	PBT-GF20	BLACK	3
					1	18POS. MIXED REC HSG, LOWER PART	PBT-GF30	BLACK	2
					1	18POS. MIXED REC HSG, UPPER PART	PBT-GF20	BLACK	1
A	F	4-2112780-9	5 7 8 15 16	AL	1	LEVER	PBT-GF20	BLACK	6
					1	RADIAL SEAL	ELASTOSIL	NATURE	5
					1	FAMILY SEAL, MCON-1.2 CB	ELASTOSIL	NATURE	4
					1	COVER FAMILY SEAL, MCON-1.2 CB	PBT-GF20	BLACK	3
					1	18POS. MIXED REC HSG, LOWER PART	PBT-GF30	BLACK	2
					1	18POS. MIXED REC HSG, UPPER PART	PBT-GF20	BLACK	1
A	F	4-2112780-8	6 7 8 16	AK	1	LEVER	PBT-GF20	BLACK	6
					1	RADIAL SEAL	ELASTOSIL	NATURE	5
					1	FAMILY SEAL, MCON-1.2 CB	ELASTOSIL	NATURE	4
					1	COVER FAMILY SEAL, MCON-1.2 CB	PBT-GF20	BLACK	3
					1	18POS. MIXED REC HSG, LOWER PART	PBT-GF30	BLACK	2
					1	18POS. MIXED REC HSG, UPPER PART	PBT-GF20	BLACK	1
A	F	4-2112780-7	2 6 7 8 11 15 16	AI	1	LEVER	PBT-GF20	BLACK	6
					1	RADIAL SEAL	ELASTOSIL	NATURE	5
					1	FAMILY SEAL, MCON-1.2 CB	ELASTOSIL	NATURE	4
					1	COVER FAMILY SEAL, MCON-1.2 CB	PBT-GF20	BLACK	3
					1	18POS. MIXED REC HSG, LOWER PART	PBT-GF30	BLACK	2
					1	18POS. MIXED REC HSG, UPPER PART	PBT-GF20	BLACK	1
A	F	2-2112780-8	2 11 12 16	R	1	LEVER	PBT-GF20	BLACK	6
					1	RADIAL SEAL	ELASTOSIL	NATURE	5
					1	FAMILY SEAL, MCON-1.2 CB	ELASTOSIL	NATURE	4
					1	COVER FAMILY SEAL, MCON-1.2 CB	PBT-GF20	BLACK	3
					1	18POS. MIXED REC HSG, LOWER PART	PBT-GF30	BLACK	2
					1	18POS. MIXED REC HSG, UPPER PART	PBT-GF20	BLACK	1
A	F	2-2112780-7	2 11 15 16	Q	1	LEVER	PBT-GF20	BLACK	6
					1	RADIAL SEAL	ELASTOSIL	NATURE	5
					1	FAMILY SEAL, MCON-1.2 CB	ELASTOSIL	NATURE	4
					1	COVER FAMILY SEAL, MCON-1.2 CB	PBT-GF20	BLACK	3
					1	18POS. MIXED REC HSG, LOWER PART	PBT-GF30	BLACK	2
					1	18POS. MIXED REC HSG, UPPER PART	PBT-GF20	BLACK	1
A	F	2-2112780-6	12 14 16	P	1	LEVER	PBT-GF20	BLACK	6
					1	RADIAL SEAL	ELASTOSIL	NATURE	5
					1	FAMILY SEAL, MCON-1.2 CB	ELASTOSIL	NATURE	4
					1	COVER FAMILY SEAL, MCON-1.2 CB	PBT-GF20	BLACK	3
					1	18POS. MIXED REC HSG, LOWER PART	PBT-GF30	BLACK	2
					1	18POS. MIXED REC HSG, UPPER PART	PBT-GF20	BLACK	1
A	F	2-2112780-5	2 6 11 16	O	1	LEVER	PBT-GF20	BLACK	6
					1	RADIAL SEAL	ELASTOSIL	NATURE	5
					1	FAMILY SEAL, MCON-1.2 CB	ELASTOSIL	NATURE	4
					1	COVER FAMILY SEAL, MCON-1.2 CB	PBT-GF20	BLACK	3
					1	18POS. MIXED REC HSG, LOWER PART	PBT-GF30	BLACK	2
					1	18POS. MIXED REC HSG, UPPER PART	PBT-GF20	BLACK	1
A	F	2-2112780-4	2 3 11 12 16	L	1	LEVER	PBT-GF20	BLACK	6
					1	RADIAL SEAL	ELASTOSIL	NATURE	5
					1	FAMILY SEAL, MCON-1.2 CB	ELASTOSIL	NATURE	4
					1	COVER FAMILY SEAL, MCON-1.2 CB	PBT-GF20	BLACK	3
					1	18POS. MIXED REC HSG, LOWER PART	PBT-GF30	BLACK	2
					1	18POS. MIXED REC HSG, UPPER PART	PBT-GF20	BLACK	1
A	F	2-2112780-3	2 5 6 15 17	K	1	LEVER	PBT-GF20	BLACK	6
					1	RADIAL SEAL	ELASTOSIL	NATURE	5
					1	FAMILY SEAL, MCON-1.2 CB	ELASTOSIL	NATURE	4
					1	COVER FAMILY SEAL, MCON-1.2 CB	PBT-GF20	BLACK	3
					1	18POS. MIXED REC HSG, LOWER PART	PBT-GF30	BLACK	2
					1	18POS. MIXED REC HSG, UPPER PART	PBT-GF20	BLACK	1
A	F	2-2112780-2	5 6 7 15 17	I	1	LEVER	PBT-GF20	BLACK	6
					1	RADIAL SEAL	ELASTOSIL	NATURE	5
					1	FAMILY SEAL, MCON-1.2 CB	ELASTOSIL	NATURE	4
					1	COVER FAMILY SEAL, MCON-1.2 CB	PBT-GF20	BLACK	3
					1	18POS. MIXED REC HSG, LOWER PART	PBT-GF30	BLACK	2
					1	18POS. MIXED REC HSG, UPPER PART	PBT-GF20	BLACK	1
A	F	2-2112780-1	2 11 15	H	1	LEVER	PBT-GF20	BLACK	6
					1	RADIAL SEAL	ELASTOSIL	NATURE	5
					1	FAMILY SEAL, MCON-1.2 CB	ELASTOSIL	NATURE	4
					1	COVER FAMILY SEAL, MCON-1.2 CB	PBT-GF20	BLACK	3
					1	18POS. MIXED REC HSG, LOWER PART	PBT-GF30	BLACK	2
					1	18POS. MIXED REC HSG, UPPER PART	PBT-GF20	BLACK	1
A	F	1-2112780-8	2 6 11	G	1	LEVER	PBT-GF20	BLACK	6
					1	RADIAL SEAL	ELASTOSIL	NATURE	5
					1	FAMILY SEAL, MCON-1.2 CB	ELASTOSIL	NATURE	4
					1	COVER FAMILY SEAL, MCON-1.2 CB	PBT-GF20	BLACK	3
					1	18POS. MIXED REC HSG, LOWER PART	PBT-GF30	BLACK	2
					1	18POS. MIXED REC HSG, UPPER PART	PBT-GF20	BLACK	1
A	F	1-2112780-7	2 6 7 11 15 16	F	1	LEVER	PBT-GF20	BLACK	6
					1	RADIAL SEAL	ELASTOSIL	NATURE	5
					1	FAMILY SEAL, MCON-1.2 CB	ELASTOSIL	NATURE	4
					1	COVER FAMILY SEAL, MCON-1.2 CB	PBT-GF20	BLACK	3
					1	18POS. MIXED REC HSG, LOWER PART	PBT-GF30	BLACK	2
					1	18POS. MIXED REC HSG, UPPER PART	PBT-GF20	BLACK	1
A	F	1-2112780-6	5 6 7 16	E	1	LEVER	PBT-GF20	BLACK	6
					1	RADIAL SEAL	ELASTOSIL	NATURE	5
					1	FAMILY SEAL, MCON-1.2 CB	ELASTOSIL	NATURE	4
					1	COVER FAMILY SEAL, MCON-1.2 CB	PBT-GF20	BLACK	3
					1	18POS. MIXED REC HSG, LOWER PART	PBT-GF30	BLACK	2
					1	18POS. MIXED REC HSG, UPPER PART	PBT-GF20	BLACK	1
A	F	1-2112780-9	-	Z	1	LEVER	PBT-GF20	BLACK	6
					1	RADIAL SEAL	ELASTOSIL	NATURE	5
					1	FAMILY SEAL, MCON-1.2 CB	ELASTOSIL	NATURE	4
					1	COVER FAMILY SEAL, MCON-1.2 CB	PBT-GF20	BLACK	3
					1	18POS. MIXED REC HSG, LOWER PART	PBT-GF30	BLACK	2
					1	18POS. MIXED REC HSG, UPPER PART	PBT-GF20	BLACK	1
A	F	1-2112780-5	5 6 7 8 15 16 17	D	1	LEVER	PBT-GF20	BLACK	6
					1	RADIAL SEAL	ELASTOSIL	NATURE	5
					1	FAMILY SEAL, MCON-1.2 CB	ELASTOSIL	NATURE	4
					1	COVER FAMILY SEAL, MCON-1.2 CB	PBT-GF20	BLACK	3
					1	18POS. MIXED REC HSG, LOWER PART	PBT-GF30	BLACK	2
					1	18POS. MIXED REC HSG, UPPER PART	PBT-GF20	BLACK	1
A	F	1-2112780-4	2 8 11 15 16	C	1	LEVER	PBT-GF20	BLACK	6
					1	RADIAL SEAL	ELASTOSIL	NATURE	5
					1	FAMILY SEAL, MCON-1.2 CB	ELASTOSIL	NATURE	4
					1	COVER FAMILY SEAL, MCON-1.2 CB	PBT-GF20	BLACK	3
					1	18POS. MIXED REC HSG, LOWER PART	PBT-GF30	BLACK	2
					1	18POS. MIXED REC HSG, UPPER PART	PBT-GF20	BLACK	1
A	F	1-2112780-3	7 15 17	B	1	LEVER	PBT-GF20	BLACK	6
					1	RADIAL SEAL	ELASTOSIL	NATURE	5
					1	FAMILY SEAL, MCON-1.2 CB	ELASTOSIL	NATURE	4
					1	COVER FAMILY SEAL, MCON-1.2 CB	PBT-GF20	BLACK	3
					1	18POS. MIXED REC HSG, LOWER PART	PBT-GF30	BLACK	2
					1	18POS. MIXED REC HSG, UPPER PART	PBT-GF20	BLACK	1
A	F	1-2112780-2	2 6 8 11 15 16	A	1	LEVER	PBT-GF20	BLACK	6
					1	RADIAL SEAL	ELASTOSIL	NATURE	5
					1	FAMILY SEAL, MCON-1.2 CB	ELASTOSIL	NATURE	4
					1	COVER FAMILY SEAL, MCON-1.2 CB	PBT-GF20	BLACK	3
					1	18POS. MIXED REC HSG, LOWER PART	PBT-GF30	BLACK	2
					1	18POS. MIXED REC HSG, UPPER PART	PBT-GF20	BLACK	1

THIS DRAWING IS A CONTROLLED DOCUMENT.

DIMENSIONS: mm

MATERIAL -

TOLERANCES UNLESS OTHERWISE SPECIFIED: ISO/DIN/NORMEN/DIN/ISO/DIN/NORMEN NO. CLASS/QUALITY
1 PLC ±
2 PLC ±
3 PLC ±
4 PLC ±
ANGLES ±1°
FINISH -

DWN P.Nickelfeld 15MAR2010
CHK J.Ryll 09APR2010
APVD D.Duenkel 09APR2010

PRODUCT SPEC 108-94094
APPLICATION SPEC 114-18853
WEIGHT -

TE Connectivity

NAME 18POS. MIXED REC HSG, ASSY
18polig Buchsengehaeuse Assy

SIZE A0 | CAGE CODE 00779 | DRAWING NO C-2112780 | RESTRICTED TO -

CUSTOMER DRAWING | SCALE 5:1 | SHEET 2 OF 2 | REV F5

4806 (3/11)