THIS DRAWING IS UNPUBLISHED. RELEASED FOR PUBLICATION AUG ,2005.
© COPYRIGHT 2005 BY TYCO ELECTRONICS CORPORATION. ALL RIGHTS RESERVED.

LOC	DIST
E	B

REVISIONS

P	LTR	DESCRIPTION	DATE	DWN	APVD
	C	ECR-07-012337	22/05/07	AM	FWK

NOTES:

1. ELECTRICAL DATA: CONTACT RESISTANCE: 10 mOhm MAX
   INSULATION RESISTANCE: 100 MOhm MIN at 500VDC
   CURRENT RATING: 5 AMPS
   BREAKDOWN VOLTAGE: 500 VAC MIN PER MINUTE
2. ENVIRONMENTAL: OPERATING TEMPERATURE: −20°C TO +80°C
   SEALING REQUIREMENTS: IP67
3. PROD SPEC: 108−3641
4. PACKAGING: 107−3334
5. FOR TECHNICAL DATA REFER TO YOUR LOCAL TYCO ELECTRONICS SALES OFFICE
6. ALL DIMENSIONS ARE NOMINAL FOR REFERENCE ONLY UNLESS OTHERWISE STATED

ITEM	DESCRIPTION	MATERIAL	FINISH/COLOUR	QTY
1	SCREW NUT	ZINC DIE CAST	2.5µm NICKEL PLATED	1
2	CONNECTOR BODY	POLYURETHANE		1
3	SOCKET CONTACT	BRASS	0.15µm GOLD PLATED OVER NICKLE	3
4	3 CORE CABLE (CORES 22AWG TO UL2464)	PVC JACKET UV RESISTANT	BLACK	1
5	'O' RING	VITON	GREEN	1

PIN ASSIGNMENTS
FRONT VIEW

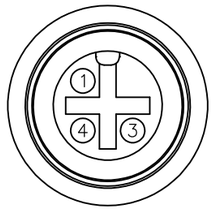

PIN	WIRE COLOUR
4	BLACK
3	BLUE
1	BROWN

LED WIRING

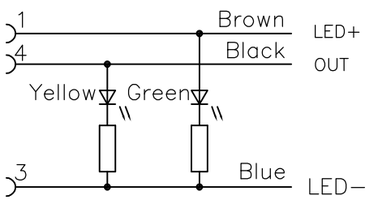

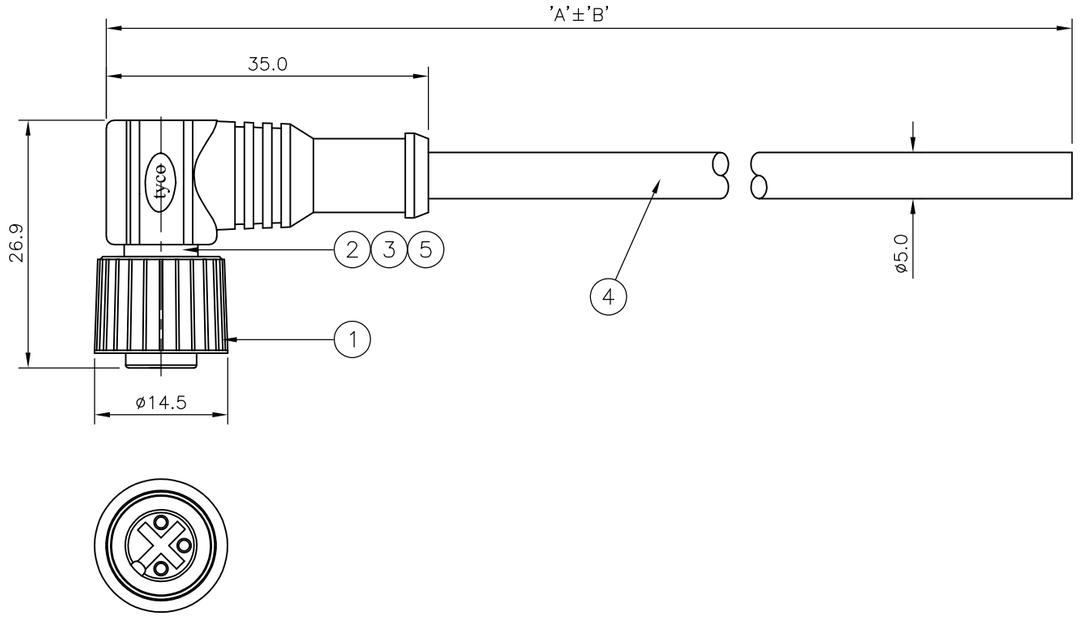

DIM A	TOL 'B'	DESCRIPTION	PART NUMBER
10000	500 mm	M12 RIGHT ANGLED FEMALE CONNECTOR 10.0m CABLE	1838264−5
7000	350 mm	M12 RIGHT ANGLED FEMALE CONNECTOR 7.0m CABLE	1838264−4
5000	250 mm	M12 RIGHT ANGLED FEMALE CONNECTOR 5.0m CABLE	1838264−3
3000	150 mm	M12 RIGHT ANGLED FEMALE CONNECTOR 3.0m CABLE	1838264−2
2000	100 mm	M12 RIGHT ANGLED FEMALE CONNECTOR 2.0m CABLE	1838264−1

THIS DRAWING IS A CONTROLLED DOCUMENT.

DIMENSIONS: mm

TOLERANCES UNLESS OTHERWISE SPECIFIED:
0 PLC ± −
1 PLC ± −
2 PLC ± −
3 PLC ± −
4 PLC ± −
ANGLES ± −

MATERIAL −
FINISH −

DWN 22AUG05 H M RAGHAVENDRA
CHK 15DEC05 F.WHEELER−KING
APVD 15DEC05 F.WHEELER−KING
PRODUCT SPEC −
APPLICATION SPEC −
WEIGHT −

tyco Electronics
Tyco Electronics Corporation
Bideford, UK, EX39 4HE

NAME
M12 RIGHT ANGLED LED VERSION
FEMALE CONNECTOR
3 POSITION, PVC CABLE

SIZE	CAGE CODE	DRAWING NO	RESTRICTED TO
A3	00779	C-1838264	−

CUSTOMER DRAWING

SCALE	SHEET	REV
NTS	1 OF 1	C