| REVISIONS | | |
|---|---|---|
| ISS | ZONE | DESCRIPTION\PER REQUEST\DATE |
| B | A-3 | NO.4 WAS CHANGED\RD-DM91010401W\01-04-02' |
| C | A-3 | NO.1 AND NO.2 WERE CHANGED\N/A\02-21-02' |
| D | C-8 | NO.6 WAS CHANGED\RD-DM91031401L\03-14-02' |
| E | C-8 | NO.6 WAS CHANGED\RD-DM91080601L\08-06-02' |
| F | C-8 | NO.6 WAS CHANGED\RD-DM91092501L\09-25-02' |
| F1 | B-6 | CANCELLED L AND M KEY CODING\N/A\02-13-03' |
| F2 | B-1 | NOTE 8 WAS CHANGED\N/A\05-15-03' |

CONFIGURATION CONTROL:
NO CHANGES PERMITTED TO DRAWING WITHOUT PPAP QUALIFIED CUSTOMER APPROVAL

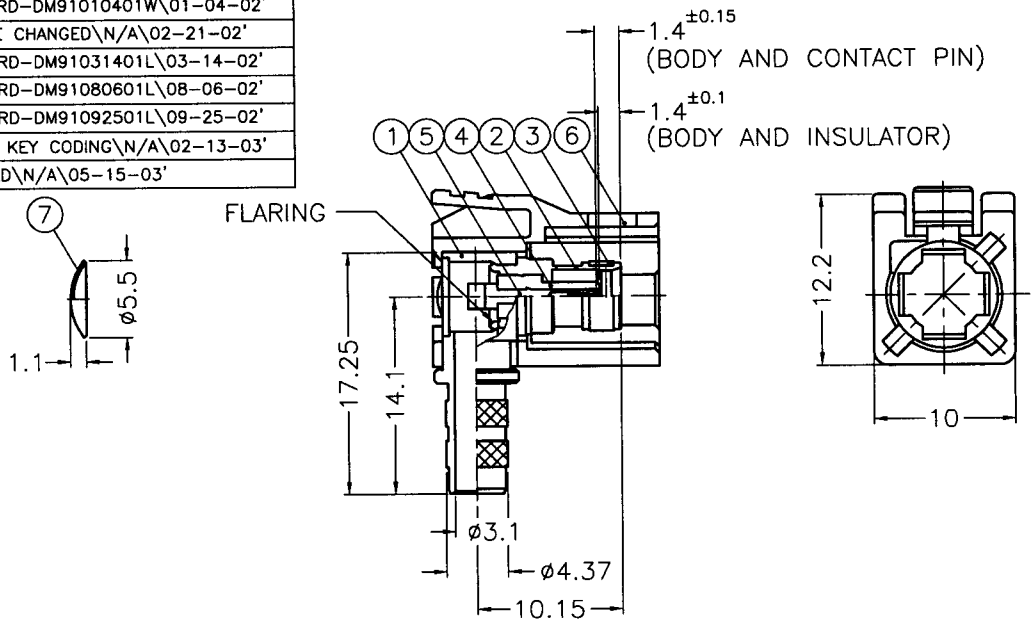


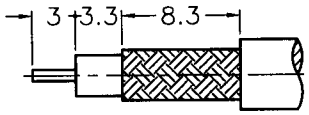


RECOMMENDED CABLE STRIPPING DIM'S

1. CRIMPED FERRULE HEX CRIMP SIZE .213"
2. CONTACT PIN TO SOLDER

NOTES: FINISH (PLATING THICKNESS IN MICRO-INCHES)
1. BRASS PER QQ-B-626, ALLOY 360, 1/2 H ; JIS H3250 C 3604BD OR EQUIVALENT
2. BERYLLIUM COPPER PER QQ-C-530, ALLOY 173, 1/2 H ; ASTM B-196 ; FUJII FX301 OR EQUIVALENT
3. BERYLLIUM COPPER JIS C1720R-1/4H ; ASTM B-194 OR EQUIVALENT
4. NICKEL PL. 60 MIN. THICK OVER OPTIONAL COPPER STRIKE
5. GOLD PL. 30 MIN. THICK OVER NICKEL PL. 100 MIN. THICK OVER OPTIONAL COPPER STRIKE
6. TEFLON MIL-P-19468 ; ASTM D-1710 OR EQUIVALENT
7. COPPER PER ASTM B-75 ALLOY C12200 OR EQUIVALENT
8. NYLON66(WITH 33% GLASS FIBER) PER NYTEX COMPOSITES CO., LTD. GRADE MG-0033N-V0 OR EQUIVALENT
9. BRASS PER QQ-B-613, ALLOY 260, H ; JIS H3100 C 2680R-H OR EQUIVALENT

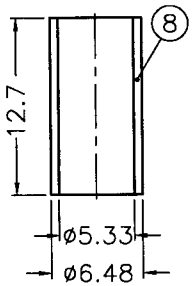


TABLE

| KEY CODING | PART NO. | DRAWING NO. | ITEM NO. | LOCK COVER |
|---|---|---|---|---|
| A | FA1-NARJ-C04-0 | FK6112AW-008-NT30G-50 | FK6112AAA57NC5F | FKLC30501D |
| B | FA1-NBRJ-C04-0 | FK6112BW-008-NT30G-50 | FK6112AAB57NC5F | FKLC30502D |
| C | FA1-NCRJ-C04-0 | FK6112CW-008-NT30G-50 | FK6112AAC57NC5F | FKLC30503D |
| D | FA1-NDRJ-C04-0 | FK6112DW-008-NT30G-50 | FK6112AAD57NC5F | FKLC30504D |
| E | FA1-NERJ-C04-0 | FK6112EW-008-NT30G-50 | FK6112AAE57NC5F | FKLC30505D |
| F | FA1-NFRJ-C04-0 | FK6112FW-008-NT30G-50 | FK6112AAF57NC5F | FKLC30506D |
| G | FA1-NGRJ-C04-0 | FK6112GW-008-NT30G-50 | FK6112AAG57NC5F | FKLC30507D |
| H | FA1-NHRJ-C04-0 | FK6112HW-008-NT30G-50 | FK6112AAH57NC5F | FKLC30508D |
| I | FA1-NIRJ-C04-0 | FK6112IW-008-NT30G-50 | FK6112AAI57NC5F | FKLC30509D |
| K | FA1-NKRJ-C04-0 | FK6112KW-008-NT30G-50 | FK6112AAK57NC5F | FKLC30510D |
| Z | FA1-NZRJ-C04-0 | FK6112ZW-008-NT30G-50 | FK6112AAZ57NC5F | FKLC30511D |

| NO. | DESCRIPTION | MATERIAL | FINISH | Q'TY | DRAWING NO. |
|---|---|---|---|---|---|
| 8 | FERRULE | NOTE 7 | NOTE 4 | 1 | FKFR00201A |
| 7 | PLATE | NOTE 9 | NOTE 4 | 1 | FKPA00102A |
| 6 | LOCK COVER | NOTE 8 | | 1 | SEE TABLE |
| 5 | CONTACT PIN | NOTE 2 | NOTE 5 | 1 | FKCP00801A |
| 4 | INSULATOR | NOTE 6 | NATURAL | 1 | FKNS01201A |
| 3 | RETAINER RING | NOTE 3 | NATURAL | 1 | FKRR00101A |
| 2 | BODY | NOTE 1 | NOTE 4 | 1 | FKBD00601B |
| 1 | HOUSING | NOTE 1 | NOTE 4 | 1 | FKHS00301B |

DIMENSIONS ARE IN MILLIMETERS

UNLESS OTHERWISE SPECIFIED TOLERANCES
0.5-6 = ±0.2
6-30 = ±0.4
30-120 = ±0.6
120-315 = ±1
315-1000 = ±1.6
1000-2000 = ±2.4

SCALE 2/1 | ISSUE F2

PART NO. FA1-NXRJ-C04-0

APPROVED MARK CHU DATE 05-15-03'

CHECKED COASE WANG DATE 05-15-03'

DRAWN LILY CHIU DATE 05-15-03'

FILE NO.F:\DWG\FK\6112XX\008\50\NT30G-F1-PPAP

**Amphenol**
Danbury,CT,USA-Tainan,Taiwan-Shenzhen,China

TITLE FAKRA R/A JACK (FOR RG-58B/U, 58C/U CABLE)

DRAWING NO. FK6112XX-008-NT30G-50

ITEM NO. FK6112AAX57NC5F