Series 800 Mighty Mouse, UN Mating Thread Plug with Crimp Contacts, Hex or Knurled Coupling

800-006 Thru 800-009 Ordering Information

Smallest Mighty Mouse Connector features a compact size and rugged design for hostile environments. Connector shells are machined aluminum or stainless steel. Supplied with crimp contacts, packaged separately. Terminate contacts with standard M22520 tools. Metal clips inside the connector body lock contact into place and can be removed via the rear release retention system. Fluorosilicone seals and rear grommet protect connector from water ingress. Choose hex or knurled coupling nut. Terminate cable shield directly to connector body with Band-Master™ ATS strap, or choose rear accessory thread to attach optional cable clamp or backshell. Available in shell sizes 5 through 12 in 36 contact arrangements.

How To Order

Sample Part Number	800-006	-06	M	6-7	P	N
Series (See Table I)	**800-006** = Hex Plug with Banding Platform **800-007** = Hex Plug with Accessory Thread **800-008** = Plug with Band Platform **800-009** = Plug with Accessory Thread					
Shell Style	**-06** = Standard Coupling Nut **-16** = Coupling Nut with Anti-Decoupling Wave Spring					
Shell Material and Finish	**C** = Aluminum / Black Anodize (Non-Conductive) RoHS Compliant **M** = Aluminum / Electroless Nickel RoHS Compliant **NF** = Aluminum / Cadmium with Olive Drab Chromate **ZNU** = Aluminum / Zinc-Nickel with Black Chromate **MT** = Aluminum / Nickel-PTFE RoHS Compliant **Z1** = Stainless Steel / Passivated RoHS Compliant					
Shell Size - Insert Arrangement	See Contact Arrangements page C-2					
Contact Type	**Connector supplied with crimp contacts** **P** = Pin **S** = Socket **Connector supplied without contacts** **A** = Pin Connector **B** = Socket Connector **Connector supplied with 30 AWG crimp contacts** **G** = Pin **H** = Socket					
Shell Key Positions (See Table II)	**N** = Normal **X** = Pos. X **Y** = Pos. Y **Z** = Pos. Z					

Table I: Series

		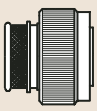	
800-006 Hex Plug with Banding Platform	**800-007** Hex Plug with Accessory Thread	**800-008** Knurled Plug with Band Platform	**800-009** Knurled Plug with Accessory Thread

Table III: Keyway Positions[6,7]

Shell Size 5 and 6	Shell Size 7 thru 12
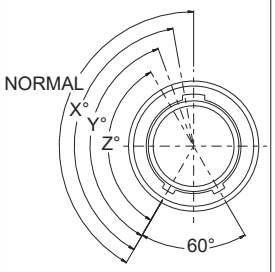	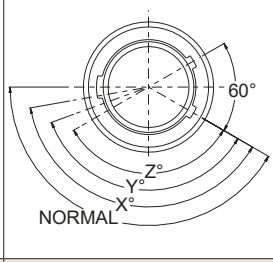

Key Position	Key Rotation
N Normal	150°
X	140°
Y	130°
Z	120°

Dimensions in Inches (millimeters) are subject to change without notice.

© 2014 Glenair, Inc.

GLENAIR, INC. • 1211 AIR WAY • GLENDALE, CA 91201-2497 • 818-247-6000 • FAX 818-500-9912
www.glenair.com E-Mail: sales@glenair.com

Series 800 Mighty Mouse, UN Mating Thread Plug with Crimp Contacts, Hex or Knurled Coupling

800-006 Thru 800-009 Dimensions

Plug connector with banding porch or accessory threads

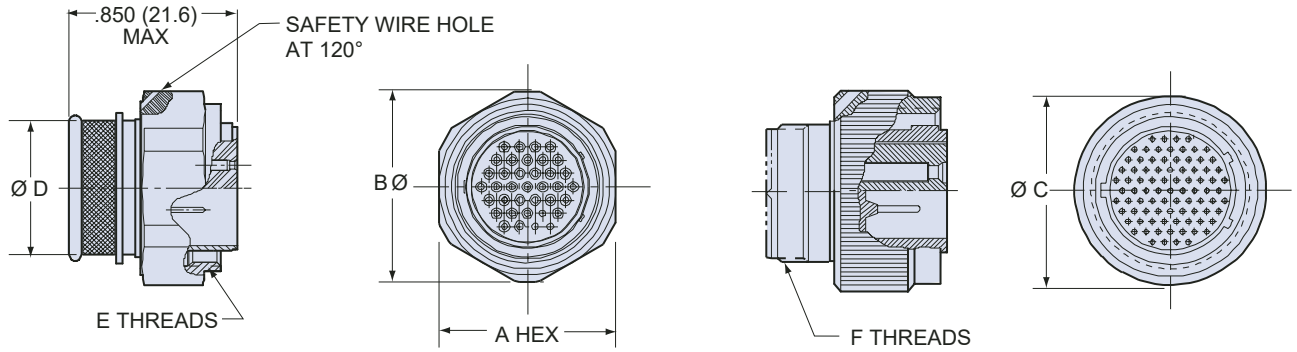

Integral Band Platform
(Hex Coupling Shown)
800-006
800-008

Hex Coupling Nut
800-006
800-007

Accessory Thread
(Knurled Coupling Shown)
800-007
800-009

Knurled Coupling
800-008
800-009

Dimensions									
Shell Size	Std Coupling Nut - Style 06			Coupling Nut with Wave Spring - Style 16			Ø D	E Threads Coupling Nut	F Threads Accessory
	A Hex	Ø B	Ø C	A Hex	B Ø	Ø C			
5	.430 (10.92)	.47 (11.94)	.43 (10.92)	.495 (12.57)	.54 (13.72)	.49 (12.45)	.230 (5.84)	.3125-28 UN-2B	.250-32 UNEF-2A
6	.500 (12.70)	.55 (13.97)	.50 (12.70)	.563 (14.30)	.62 (15.75)	.56 (14.22)	.286 (7.26)	.3750-28 UN-2B	.3125-32 UNEF-2A
7	.625 (15.88)	.68 (17.27)	.62 (15.75)	.720 (18.29)	.80 (20.32)	.68 (17.27)	.390 (9.91)	.4375-28 UNEF-2B	.4375-28 UNEF-2A
8	.680 (17.27)	.75 (19.05)	.68 (17.27)	.743 (18.87)	.83 (21.08)	.75 (19.05)	.445 (11.30)	.5000-32 UN-2B	.5000-28 UNEF-2A
9	.750 (19.05)	.83 (21.08)	.75 (19.05)	.813 (20.65)	.89 (22.61)	.81 (20.57)	.500 (12.70)	.5625-32 UN-2B	.5625-24 UNEF-2A
10	.812 (20.62)	.90 (22.86)	.81 (20.57)	.875 (22.23)	.96 (24.38)	.88 (22.35)	.565 (14.35)	.6250-32 UN-2B	.6250-24 UNEF-2A
12	.875 (22.23)	.97 (24.64)	.88 (22.35)	.938 (23.83)	1.03 (26.16)	.94 (23.88)	.650 (16.51)	.7500-28 UN-2B	.6875-24 UNEF-2A

NOTES

1. Contacts are size 23 crimp type, and used in a rear release retention system
2. Additional insert arrangements available, consult factory
3. Crimp barrel accommodates 22, 24 , 26 and 28 gage wire
4. Crimp tool data:

- Crimp frame: M2252002-01
- Positioner for use with crimp frame: Glenair P/N 809-005
- Insertion tool: Glenair P/N 806-006
- Extraction tool: Glenair P/N 809-007

5. **Shell sizes 5 thru 6 and insert arrangement 8-13:** master key is located at top dead center (TDC) for normal (N) position.
6. **Shell size 7 thru 12:** master key is rotated 90° from TDC for normal position

Material / finish:

- Shell: Aluminum Alloy or CRES / see How to Order Table
- Coupling nut: aluminum alloy or CRES: see How to Order Table
- Insulator: LCP or epoxy
- Interfacial seal, grommet seal: fluorosilicone or silicone
- Contact: copper alloy / gold plate per ASTM B 488, Type II, Class 1.25, over a suitable underplate

Dimensions in Inches (millimeters) are subject to change without notice.

© 2014 Glenair, Inc.

GLENAIR, INC. • 1211 AIR WAY • GLENDALE, CA 91201-2497 • 818-247-6000 • FAX 818-500-9912
www.glenair.com **E-Mail: sales@glenair.com**