THIS DRAWING IS UNPUBLISHED. RELEASED FOR PUBLICATION 20
© 2016 COMMSCOPE, INC. CONFIDENTIAL
NOTICE: THESE DRAWINGS AND SPECIFICATIONS ARE THE PROPRIATARY PROPERTY OF COMMSCOPE, INC. AND MAY BE USED ONLY FOR THE SPECIFIC PURPOSE AUTHORIZED IN WRITING BY COMMSCOPE, INC.

REVISIONS

P	LTR	DESCRIPTION	DATE	DWN	APVD
	C	REV; 40033035MCO	23AUG2016	GG	TE

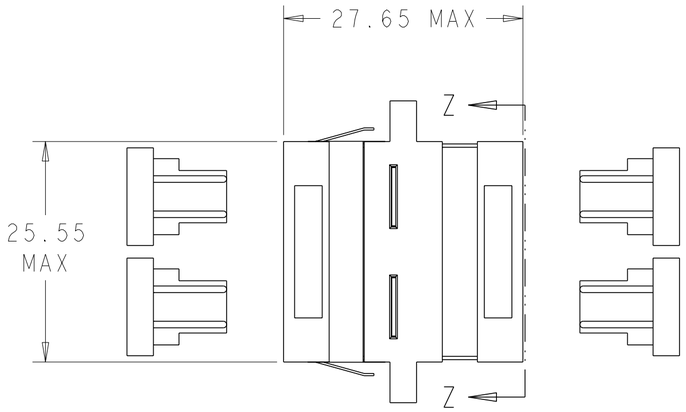

SCALE 2:1

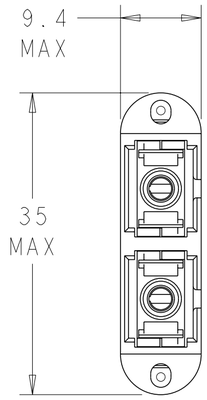

SECTION Z-Z

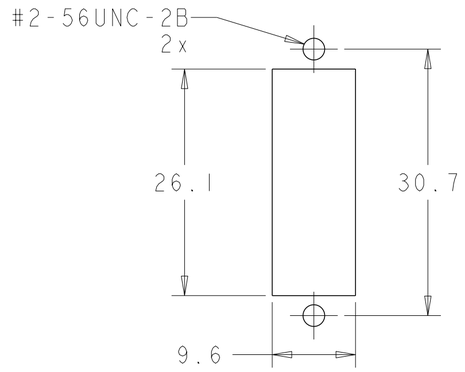

SCALE 2:1

SUGGESTED PANEL CUTOUT
MAX PANEL THICKNESS 1.7

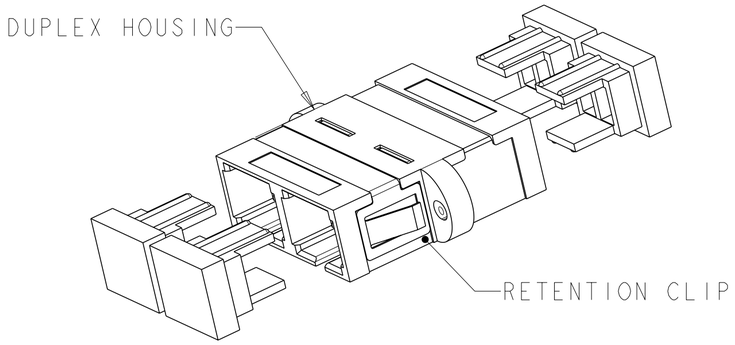

5502276-7/-8/-9/1-0/1-1/
1-2/1-3/2-2/2-3/2-5/2-6
(WITHOUT TE LOGO)

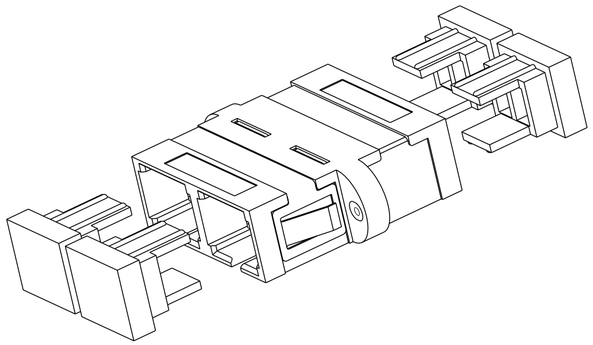

3-5502276-0/3-5502276-1
(WITH TE LOGO)

	INCLUDED HARDWARE	ALIGNMENT SLEEVE	COLOR	PART NUMBER
	RETENTION CLIP	CERAMIC	GREEN	3-5502776-1
	RETENTION CLIP	CERAMIC	BLUE	3-5502776-0
	RETENTION CLIP	CERAMIC	AQUA	2-5502776-6
	RETENTION CLIP	METAL	AQUA	2-5502776-5
	RETENTION CLIP	CERAMIC	GREEN	2-5502776-3
	NONE	CERAMIC	GREEN	2-5502776-2
2	RETENTION CLIP	METAL	BLACK	1-5502776-3
	RETENTION CLIP	CERAMIC	BEIGE	1-5502776-2
	RETENTION CLIP	CERAMIC	BLUE	1-5502776-1
	RETENTION CLIP	CERAMIC	BLACK	1-5502776-0
	RETENTION CLIP	METAL	BEIGE	5502776-9
	RETENTION CLIP	METAL	BLUE	5502776-8
	RETENTION CLIP	METAL	BLACK	5502776-7

1 MATERIAL:
HOUSING: PBT-GF30, SEE DASH NUMBERS FOR COLOR.*
RETAINER: PEI-GF30, COLOR: BLACK.*
RETENTION CLIP: STAINLESS STEEL.
ALIGNMENT SLEEVE: SEE DASH NUMBERS.
PROTECTIVE COVER: TPE, COLOR: BLACK.*
*UL94 V-0 RATED AT QUALIFYING THICKNESS.

2 BULK PACKAGE.

THIS DRAWING IS A CONTROLLED DOCUMENT.

DIMENSIONS: mm

TOLERANCES UNLESS OTHERWISE SPECIFIED:
0 PLC ±-
1 PLC ±0.1
2 PLC ±0.05
3 PLC ±-
4 PLC ±-
ANGLES ±-

MATERIAL 1 -

FINISH - -

DWN B.BRIGGS 13MAY2005
CHK S.MILLER 13MAY2005
APVD S.BUCHTER 13MAY2005
PRODUCT SPEC -
APPLICATION SPEC -
WEIGHT -

COMMSCOPE, INC.

NAME RECEPTACLE ASSEMBLY, DUPLEX, SC TO SC
-

SIZE A2 | CAGE CODE 00779 | DRAWING NO C-5502776 | RESTRICTED TO -

CUSTOMER DRAWING | SCALE 4:1 | SHEET 1 OF 1 | REV C

1471