THIS DRAWING IS UNPUBLISHED. RELEASED FOR PUBLICATION JULY ,2006.
© COPYRIGHT 2006 BY TYCO ELECTRONICS CORPORATION. ALL RIGHTS RESERVED.

LOC	DIST
E	B

REVISIONS

P	LTR	DESCRIPTION	DATE	DWN	APVD
	B	ECR-06-017552	20JUL06	JMS	FWK

NOTES:

1. PACK IN ACCORDANCE WITH AMP SPEC 107-3275
2. 100 TRAY PACK IN ACCORDANCE WITH AMP SPEC 107-3275
3. Ag PLATING
4. Ni PLATING
5. THIS ITEM MUST BE WHITE
6. ELECTRICAL CHARACTERISTICS
   - FREQUENCY RANGE: DC – 2 GHz
   - NOMINAL IMPEDANCE: 75 Ohm
   - INSULATION RESISTANCE: 5000 MOhm
   - WORKING VOLTAGE: 500 Volts RMS at Sea Level
   - DIELECTRIC WITHSTAND VOLTAGE: 1500 Volts RMS Max
   - CONTACT RESISTANCE:
   - CENTRE CONTACT: 1.50 mOhm Max
   - OUTER CONTACT: 0.20 mOhm Max
   - VSWR @ 2GHz: 1.20:1 Max
   - INSERTION LOSS dB @ x 2 GHz: 0.20 Max
7. MECHANICAL CHARACTERISTICS
   - COUPLING RETENTION FORCE: 445N Min
   - CABLE RETENTION FORCE: 85N Min
   - CLAMP NUT RECOMMENDED TORQUE: 4N
   - DURABILITY: 500 Cycles Min
8. ENVIRONMENTAL CHARACTERISTICS
   - OPERATING TEMPERATURE: –65 to +165 DegC
9. FOR TECHNICAL DATA REFER TO YOUR LOCAL TYCO ELECTRONICS SALES OFFICE
10. ALL DIMENSIONS ARE NOMINAL FOR REFERENCE ONLY UNLESS OTHERWISE STATED

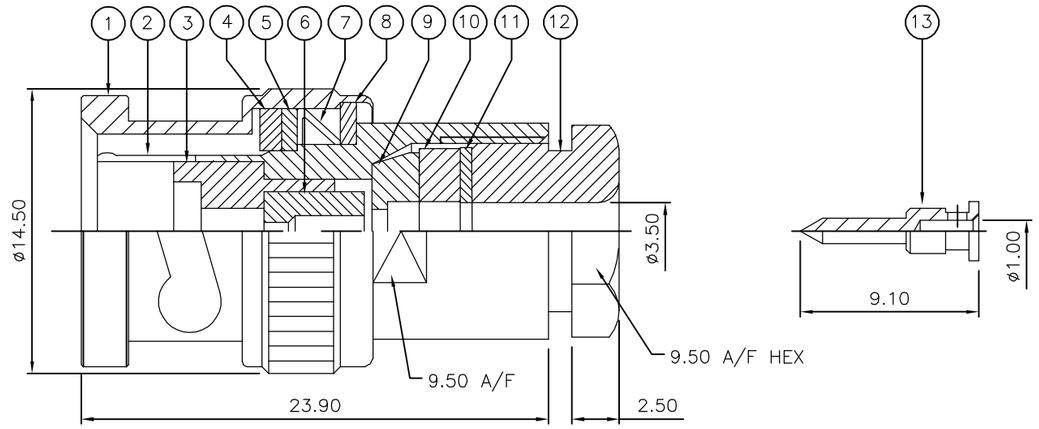

RECOMMENDED CABLE STRIPPING DIM'S

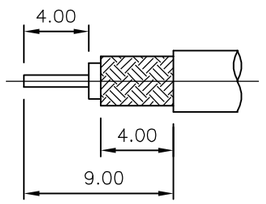

QUANTITY PER ASSY				PARTS LIST		
		1	1	BRASS (3)	CONTACT	13
		1	1	BRASS (3)	CLAMP NUT	12
		1	1	BRASS (3)	WASHER	11
		1	1	SILICONE RUBBER (5)	GASKET	10
		1	1	BRASS (3)	SLEEVE	9
		1	1	BRASS (3)	WASHER	8
		1	1	SPRING STEEL (4)	SPRING	7
		1	1	PTFE	INSULATION	6
		1	1	BRASS (4)	RETAINING RING	5
		1	1	SILICONE RUBBER (5)	GASKET	4
		1	1	PTFE	INSULATION	3
		1	1	BRASS (3)	BODY	2
		1	1	BRASS (3)	SHELL	1
		6--0	1--0	MATERIAL	DESCRIPTION	ITEM
		(2)	(1)			

THIS DRAWING IS A CONTROLLED DOCUMENT.

DIMENSIONS: mm

TOLERANCES UNLESS OTHERWISE SPECIFIED:
0 PLC ± –
1 PLC ± –
2 PLC ± –
3 PLC ± –
4 PLC ± –
ANGLES ± –

MATERIAL: SEE TABLE

FINISH: –

DWN	J.SANDWELL	20JUL06
CHK	S.PARLOW	20JUL06
APVD	F.WHEELER-KING	20JUL06
PRODUCT SPEC	–	
APPLICATION SPEC	411-3253	
WEIGHT	–	

tyco Electronics
Tyco Electronics Corporation
Bideford EX39 4HE

NAME: BNC STRAIGHT PLUG SOLDER 75 OHM RG179B/U, 187A/U, URM111 –

SIZE	CAGE CODE	DRAWING NO	RESTRICTED TO
A3	00779	C-1478152	–

CUSTOMER DRAWING

SCALE	SHEET	REV
NTS	1 OF 1	B