MALLORY Mallory Sonalert Products Inc.	Part # PLD-21N30P
Sales Outline Drawing	Revision B

OBSOLETE- USE PLD-21N30PQ

Specificat

Resonant Frequency (Hz)	3000 ± 500
Operating Voltage (Vdc)	3 ~ 30
Rated Voltage (Vdc)	12
Current Consumption Max. (mA)	12 at Rated Voltage
Sound Pressure Level Min. (dB)	80 at 30 cm at Rated Voltage
Tone/Pulse Rate (Hz)	Constant + Slow Pulse 1.2 ±20%
Operating Temperature (°C)	-20 ~ +70
Storage Temperature (°C)	-30 ~ +80
Housing	ABS 777 UL94HB plastic resin (Color: Black)
Leading Pins	Tin Plated Brass
Weight (Grams)	3.0
Options	For other options contact factory

Dimensions: (units: mm)

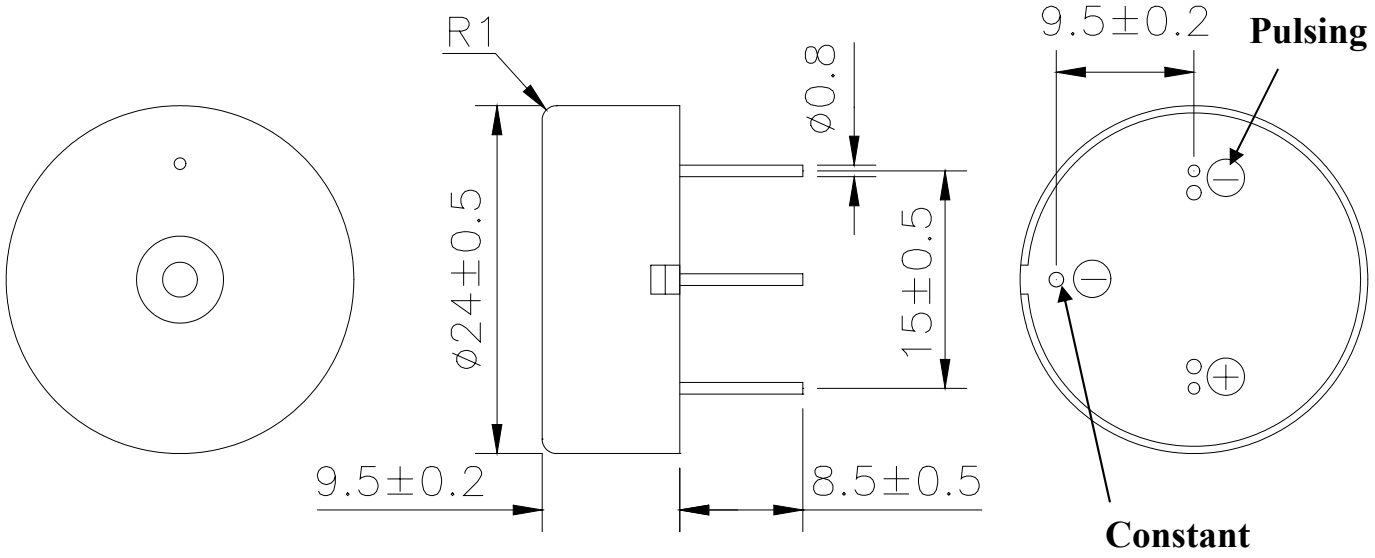

4411 South High School Road, Indianapolis, Indiana 46241 USA ● Phone (317) 612-1000 ● Fax (317) 612-1010 ● http://www.mallory-sonalert.com