To all our customers

Regarding the change of names mentioned in the document, such as Mitsubishi Electric and Mitsubishi XX, to Renesas Technology Corp.

The semiconductor operations of Hitachi and Mitsubishi Electric were transferred to Renesas Technology Corporation on April 1st 2003. These operations include microcomputer, logic, analog and discrete devices, and memory chips other than DRAMs (flash memory, SRAMs etc.) Accordingly, although Mitsubishi Electric, Mitsubishi Electric Corporation, Mitsubishi Semiconductors, and other Mitsubishi brand names are mentioned in the document, these names have in fact all been changed to Renesas Technology Corp. Thank you for your understanding. Except for our corporate trademark, logo and corporate statement, no changes whatsoever have been made to the contents of the document, and these changes do not constitute any alteration to the contents of the document itself.

Note : Mitsubishi Electric will continue the business operations of high frequency & optical devices and power devices.

Renesas Technology Corp.
Customer Support Dept.
April 1, 2003

M306V2ME-XXXFP
M306V2EEFP

SINGLE-CHIP 16-BIT CMOS MICROCOMPUTER with CLOSED CAPTION DECODER
and ON-SCREEN DISPLAY CONTROLLER

1. DESCRIPTION

The M306V2ME-XXXFP and M306V2EEFP are single-chip microcomputers using the high-performance silicon gate CMOS process using a M16C/60 Series CPU core and are packaged in a 100-pin plastic molded QFP. These single-chip microcomputers operate using sophisticated instructions featuring a high level of instruction efficiency. With 1M bytes of address space, they are capable of executing instructions at high speed. They also feature a built-in OSD display function and data slicer, making them ideal for controlling TV with a closed caption decoder.

The features of the M306V2EEFP are similar to those of the M306V2ME-XXXFP except that this chip has a built-in PROM which can be written electrically.

1.1 Features

- Memory size ..... <ROM>192K bytes
  <RAM> 5K bytes
  <OSD ROM> 61K bytes
  <OSD RAM> 2.2K bytes
- Shortest instruction execution time ..... 100 ns (f(XIN)=10 MHz)
- Power sourse voltage ..... 4.5 V to 5.5V
- Power consumption ..... 250 mW
- Interrupts ..... 21 internal and 3 external interrupt sources, 4 software interrupt sources; 7 levels
- Multifunction 16-bit timer ..... 2 output timers + 3 input timers + 3 timers
- Serial I/O ..... 4 units
  UART/clock synchronous: 2
  Multi-master I^2C-BUS interface 0 (2 systems): 1
  Multi-master I^2C-BUS interface 1 (1 system): 1
- DMAC ..... 2 channels (trigger: 23 sources)
- A-D converter ..... 8 bits × 6 channels
- D-A converter ..... 8 bits × 2 channels
- Data slicer ..... 1 circuit
- HSYNC counter ..... 1 circuit (2 systems)
- OSD function ..... 1 circuit
- Watchdog timer ..... 1 circuit
- Programmable I/O ..... 78 lines
- Memory expansion ..... Available
- Chip select output ..... 4 lines
- Clock generating circuit ..... 3 built-in clock generation circuits

1.2 Applications

TV with a closed caption decoder

------Table of Contents------

1. DESCRIPTION 1
1.1 Features 1
1.2 Applications 1
1.3 Pin Configuration 3
1.4 Block Diagram 4
1.5 Performance Outline 5

2. OPERATION OF FUNCTIONAL BLOCKS 9
2.1 Memory 9
2.2 Central Processing Unit (CPU) 15
2.3 Reset 18
2.4 Processor Mode 23
2.5 Clock Generating Circuit 36
2.6 Protection 46
2.7 Interrupts 47
2.8 Watchdog Timer 67
2.9 DMAC 69
2.10 Timer 79
2.11 Serial I/O 99
2.12 A-D Converter 149
2.13 D-A Converter 164
2.14 Data Slicer 166
2.15 HSYNC Counter 176
2.16 OSD Function 177
2.16.1 Triple Layer OSD 183
2.16.2 Display Position 185
2.16.3 Dot Size 189
2.16.4 Clock for OSD 190
2.16.5 Field Determination Display 191
2.16.6 Memory for OSD 193
2.16.7 Character Color 206
2.16.8 Character Background Color 206
2.16.9 OUT1, OUT2 Signals 211
2.16.10 Attribute 212
2.16.11 Automatic Solid Space Function 217
2.16.12 Particular OSD Mode Block 218
2.16.13 Multiline Display 220
2.16.14 SPRITE OSD Function 221
2.16.15 Window Function 224
2.16.16 Blank Function 225
2.16.17 Raster Coloring Function 228
2.16.18 Scan Mode 230
2.16.19 R, G, B Signal Output Control ... 230
2.16.20 OSD Reserved Register 231
2.17 Programmable I/O Ports 232

3. USAGE PRECAUTION 245
3.1 Timer A (timer mode) 245
3.2 Timer A (event counter mode) 245
3.3 Timer A (one-shot timer mode) 245
3.4 Timer A (pulse width modulation mode) 245
3.5 Timer B (timer mode, event counter mode) 246
3.6 Timer B (pulse period/pulse width measurement mode) 246
3.7 A-D Converter 246
3.8 Stop Mode and Wait Mode 246
3.9 Interrupts 247
3.10 Built-in PROM version 248

4. ITEM TO BE SUBMITTED WHEN ORDERING MASKED ROM VERSION 249
5. ELECTRICAL CHARACTERISTICS 250
5.1 Absolute Maximum Ratings 250
5.2 Recommended Operating Conditions .. 251
5.3 Electrical Characteristics 252
5.4 A-D Conversion Characteristics 253
5.5 D-A Conversion Characteristics 253
5.6 Analog R, G, B Output Characteristics 253
5.7 Timing Requirements 254
5.8 Switching Characteristics 255
5.9 Measurement Circuit 259
5.10 Timing Diagram 260

6. MASK ROM CONFIRMATION FORM 265

7. MARK SPECIFICATION FORM 269

8.ONE TIME PROM VERSION M306V2EEFP MARKING 270

9. PACKAGE OUTLINE 271

1.3 Pin Configuration

Figure 1.3.1 shows the pin configuration (top view).

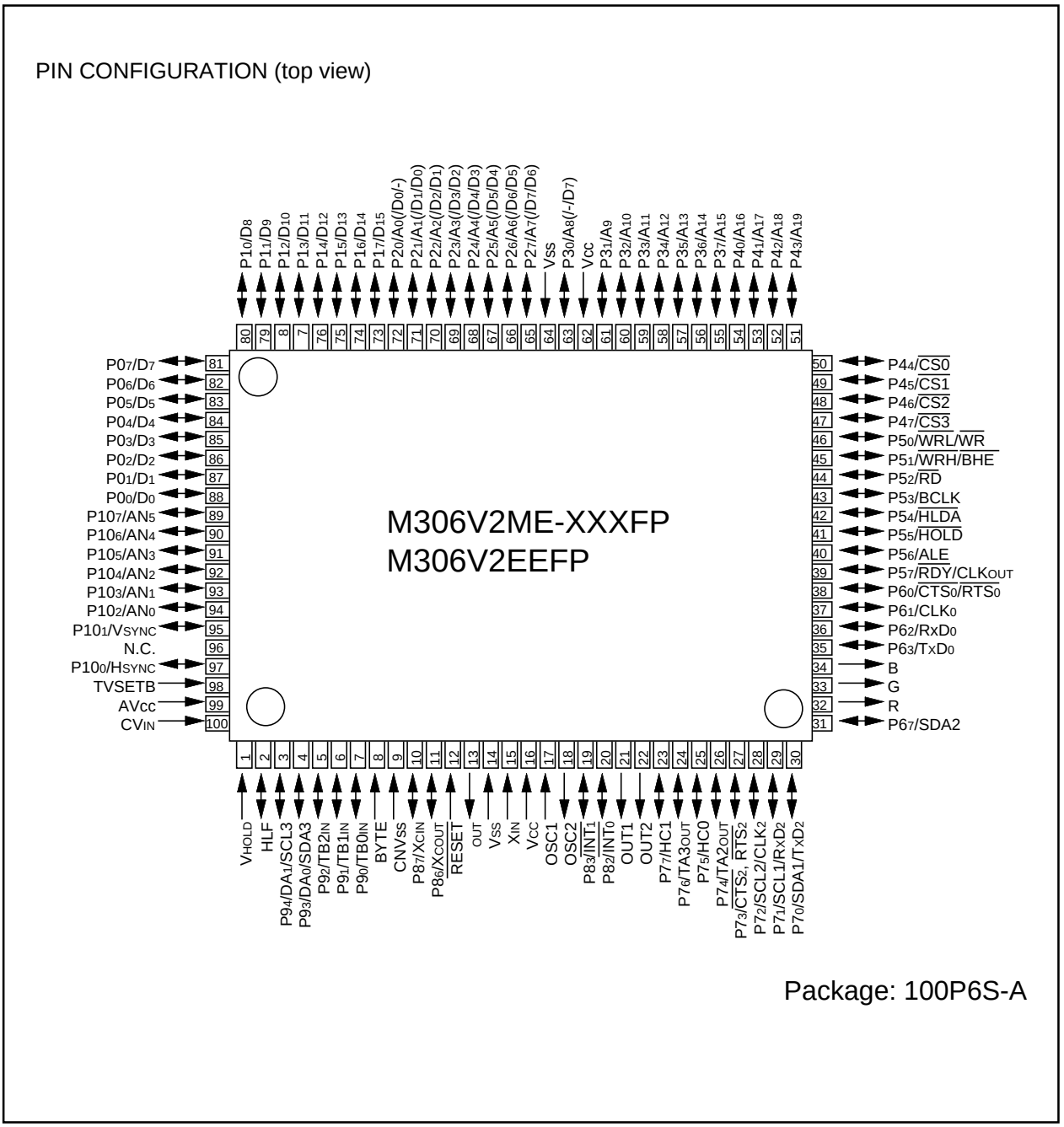

Figure 1.3.1 Pin configuration (top view)

1.4 Block Diagram

Figure 1.4.1 is a block diagram.

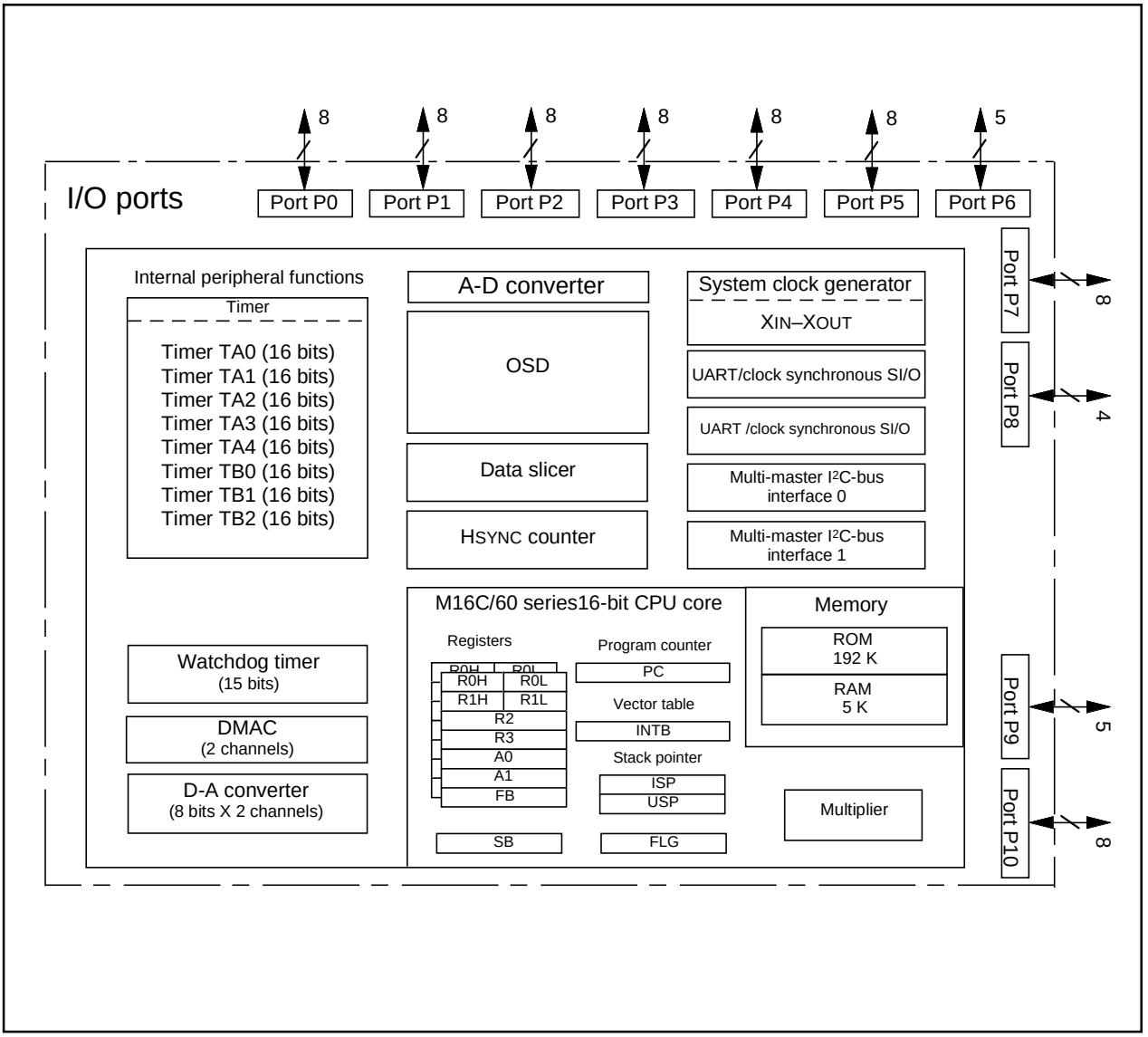

Figure 1.4.1 Block diagram

1.5 Performance Outline

Table 1.5.1 is a performance outline.

Table 1.5.1 Performance outline

Item		Performance
Number of basic instructions		91 instructions
Shortest instruction execution time		100 ns(f(XIN)=10 MHz)
Memory size	ROM	192K bytes
	RAM	5K bytes
	OSD ROM	61K bytes
	OSD RAM	2.2K bytes
I/O port	P0 to P10	8 bits × 8, 5 bits × 2, 4 bits × 1
Multifunction timer	TA0, TA1, TA2, TA3, TA4	16 bits × 5
	TB0, TB1, TB2	16 bits × 3
Serial I/O	UART0	1 unit: UART or clock synchronous
	UART2	1 unit: UART or clock synchronous
	Multi-master I^2C-BUS interface 0	1 unit (2 channels)
	Multi-master I^2C-BUS interface 1	1 unit (1 channel)
A-D converter		8 bits × 6 channels
D-A converter		8 bits × 2 channels
DMAC		2 channels (trigger: 23 sources)
OSD function		Triple layer, 890 kinds of fonts, 42 character × 16 lines
Data slicer		32-bit buffer
HSYNC counter		8 bits × 2 channels
Watchdog timer		15 bits × 1 (with prescaler)
Interrupt		21 internal and 3 external sources, 4 software sources, 7 levels
Clock generating circuit		3 built-in clock generation circuits
Power source voltage		4.5 V to 5.5V (f(XIN) = 10 MHz)
Power consumption		250 mW
I/O characteristics	I/O withstand voltage	5 V
	Output current	5 mA
Memory expansion		Available
Operating ambient temperature		–10 °C to 70 °C
Device configuration		CMOS high performance silicon gate
Package		100-pin plastic molded QFP

Currently supported products are listed below.

Table 1.5.2 List of supported products

Type No	ROM capacity	RAM capacity	Package type	Remarks
M306V2ME-XXXFP	192K bytes	5K bytes	100P6S-A	Mask ROM version
M306V2EEFP	192K bytes	5K bytes	100P6S-A	One Time PROM version
M306V2EEFS	192K bytes	5K bytes	100D0	EPROM version

Note: Since EPROM version is for development support tool (for evaluation), do not use for mass production.

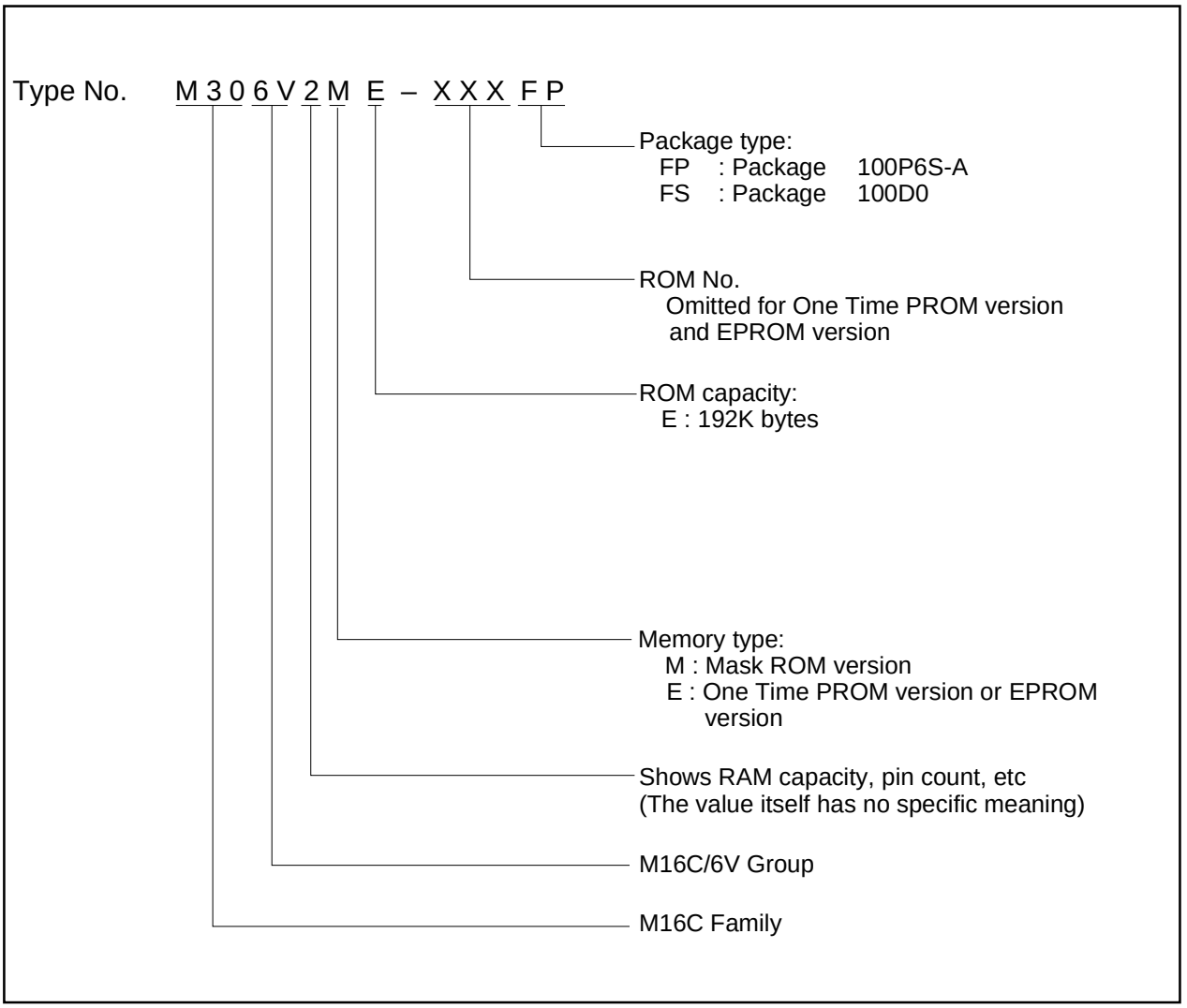

Figure 1.5.1 Type No., memory size, and package

Table 1.5.3 Pin description (1)

Pin name	Signal name	I/O type	Function
V_{CC}, V_{SS}	Power supply input		Supply 4.5 V to 5.5 V to the V_{CC} pin. Supply 0 V to the V_{SS} pin.
CNV_{SS}	CNV_{SS}	Input	This pin switches between processor modes. Connect it to the V_{SS} pin when operating in single-chip or memory expansion mode. Connect it to the V_{CC} pin when in microprocessor mode.
$\overline{RESET}$	Reset input	Input	A “L” on this input resets the microcomputer.
X_{IN} X_{OUT}	Clock input Clock output	Input Output	These pins are provided for the main clock generating circuit.Connect a ceramic resonator or crystal between the X_{IN} and the X_{OUT} pins. To use an externally derived clock, input it to the X_{IN} pin and leave the X_{OUT} pin open.
BYTE	External data bus width select input	Input	This pin selects the width of an external data bus. A 16-bit width is selected when this input is “L”; an 8-bit width is selected when this input is “H”. This input must be fixed to either “H” or “L.” When operating in single-chip mode,connect this pin to V_{SS}.
AV_{CC}	Analog power supply input		This pin is a power supply input for the A-D converter. Connect this pin to V_{CC}.
$P0_0$ to $P0_7$	I/O port P0	Input/output	This is an 8-bit CMOS I/O port. It has an input/output port direction register that allows the user to set each pin for input or output individually. When set for input in single-chip mode, the user can specify in units of four bits via software whether or not they are tied to a pull-up resistor. In memory expansion and microprocessor modes, the user cannot specify that.
D_0 to D_7		Input/output	When set as a separate bus, these pins input and output data (D_0–D_7).
$P1_0$ to $P1_7$	I/O port P1	Input/output	This is an 8-bit I/O port equivalent to P0.
D_8 to D_{15}		Input/output	When set as a separate bus, these pins input and output data (D_8–D_{15}).
$P2_0$ to $P2_7$	I/O port P2	Input/output	This is an 8-bit I/O port equivalent to P0.
A_0 to A_7		Output	These pins output 8 low-order address bits (A_0–A_7).
A_0/D_0 to A_7/D_7		Input/output	If the external bus is set as an 8-bit wide multiplexed bus, these pins input and output data (D_0–D_7) and output 8 low-order address bits (A_0–A_7) separated in time by multiplexing.
A_0 A_1/D_0 to A_7/D_6		Output Input/output	If the external bus is set as a 16-bit wide multiplexed bus, these pins input and output data (D_0–D_6) and output address (A_1–A_7) separated in time by multiplexing. They also output address (A_0).
$P3_0$ to $P3_7$	I/O port P3	Input/output	This is an 8-bit I/O port equivalent to P0.
A_8 to A_{15}		Output	These pins output 8 middle-order address bits (A_8–A_{15}).
A_8/D_7, A_9 to A_{15}		Input/output Output	If the external bus is set as a 16-bit wide multiplexed bus, these pins input and output data (D_7) and output address (A_8) separated in time by multiplexing. They also output address (A_9–A_{15}).
$P4_0$ to $P4_7$	I/O port P4	Input/output	This is an 8-bit I/O port equivalent to P0.
$\overline{CS_0}$ to $\overline{CS_3}$, A_{16} to A_{19}		Output Output	These pins output $\overline{CS_0}$–$\overline{CS_3}$ signals and A_{16}–A_{19}. $\overline{CS_0}$–$\overline{CS_3}$ are chip select signals used to specify an access space. A_{16}–A_{19} are 4 high-order address bits.

Table 1.5.4 Pin description (continued) (2)

Pin name	Signal name	I/O type	Function
$P5_0$ to $P5_7$	I/O port P5	Input/output	This is an 8-bit I/O port equivalent to P0. In single-chip mode, $P5_7$ in this port outputs a divide-by-8 or divide-by-32 clock of X_{IN} or a clock of the same frequency as X_{CIN} as selected by software.
$\overline{WRL}$ / $\overline{WR}$, $\overline{WRH}$ / $\overline{BHE}$, $\overline{RD}$, $\overline{BCLK}$, $\overline{HLDA}$, $\overline{HOLD}$, $\overline{ALE}$, $\overline{RDY}$		Output Output Output Output Output Input Output Input	Output $\overline{WRL}$, $\overline{WRH}$ ($\overline{WR}$ and $\overline{BHE}$), $\overline{RD}$, $\overline{BCLK}$, $\overline{HLDA}$, and ALE signals. $\overline{WRL}$ and $\overline{WRH}$, and $\overline{BHE}$ and $\overline{WR}$ can be switched using software control. ■ $\overline{WRL}$, $\overline{WRH}$, and $\overline{RD}$ selected With a 16-bit external data bus, data is written to even addresses when the $\overline{WRL}$ signal is "L" and to the odd addresses when the $\overline{WRH}$ signal is "L". Data is read when $\overline{RD}$ is "L". ■ $\overline{WR}$, $\overline{BHE}$, and $\overline{RD}$ selected Data is written when $\overline{WR}$ is "L". Data is read when $\overline{RD}$ is "L". Odd addresses are accessed when $\overline{BHE}$ is "L". Use this mode when using an 8-bit external data bus. While the input level at the $\overline{HOLD}$ pin is "L", the microcomputer is placed in the hold state. While in the hold state, $\overline{HLDA}$ outputs a "L" level. ALE is used to latch the address. While the input level of the $\overline{RDY}$ pin is "L", the microcomputer is in the ready state.
$P6_0$ to $P6_3$, $P6_7$	I/O port P6	Input/output	This is an 5-bit I/O port equivalent to P0. When set for input in single-chip, microprocessor and memory expansion modes, the user can specify in units of four bits via software whether or not they are tied to a pull-up resistor. Pins in this port also function as UART0, UART2 and multi-master I^2C-BUS interface 0 I/O pins as selected by software.
$P7_0$ to $P7_7$	I/O port P7	Input/output	This is an 8-bit I/O port equivalent to P6 ($P7_0$ and $P7_1$ are N-channel open-drain output). Pins in this port also function as timers A2 and A3, UART2, multi-master I^2C-BUS interface 0, or H_{SYNC} counter I/O pins as selected by software.
$P8_2$, $P8_3$, $P8_6$, $P8_7$	I/O port P8	Input/output	$P8_2$, $P8_3$, $P8_6$ and $P8_7$ are I/O ports with the same functions as P6. Using software, $P8_2$ and $P8_3$ can be made to function as the I/O pins for the input pins for external interrupts. $P8_6$ and $P8_7$ can be set using software to function as the I/O pins for a sub-clock generation circuit. In this case, connect a quartz oscillator between $P8_6$ (X_{COUT} pin) and $P8_7$ (X_{CIN} pin).
$P9_0$ to $P9_4$	I/O port P9	Input/output	This is an 5-bit I/O port equivalent to P6. Pins in this port also function as Timer B0 to B2 input pins, D-A converter output pins, or multi-master I^2C-BUS interface 1 I/O pins.
$P10_0$ to $P10_7$	I/O port P10	Input/output	This is an 8-bit I/O port equivalent to P6. Pins in this port also function as A-D converter input pins. Furthermore, $P10_0$ and $P10_1$ also function as input pins for OSD function.
R, G, B	OSD output	Output	These are OSD output pins (analog output).
OUT1, OUT2	OSD output	Output	These are OSD output pins (digital output).
OSC1	Clock input for OSD	Input	This is an OSD clock input pin.
OSC2	Clock output for OSD	Output	This is an OSD clock output pin.
CV_{IN}	I/O for data slicer	Input	Input composite video signal through a capacitor.
V_{HOLD}		Input	Connect a capacitor between V_{HOLD} and Vss.
HLF		Input/output	Connect a filter using of a capacitor and a resistor between HLF and Vss.
TVSETB	Test input	Input	This is a test input pin. Fix it to "L."

2. OPERATION OF FUNCTIONAL BLOKS

This microcomputer accommodates certain units in a single chip. These units include ROM and RAM to store instructions and data and the central processing unit (CPU) to execute arithmetic/logic operations. Also included are peripheral units such as timers, serial I/O, D-A converter, DMAC, OSD circuit, data slicer, A-D converter, and I/O ports.
The following explains each unit.

2.1 Memory

Figure 2.1.1 is a memory map. The address space extends the 1M bytes from address 00000_{16} to $FFFFF_{16}$. From $FFFFF_{16}$ down is ROM. There is 192K bytes of internal ROM from $D0000_{16}$ to $FFFFF_{16}$. The vector table for fixed interrupts such as the reset mapped to $FFFDC_{16}$ to $FFFFF_{16}$. The starting address of the interrupt routine is stored here. The address of the vector table for timer interrupts, etc., can be set as desired using the internal register (INTB). See the section on interrupts for details.
5K bytes of internal RAM is mapped to the space from $02C00_{16}$ to $03FFF_{16}$. In addition to storing data, the RAM also stores the stack used when calling subroutines and when interrupts are generated.
The SFR area is mapped to 00000_{16} to $003FF_{16}$. This area accommodates the control registers for peripheral devices such as I/O ports, A-D converter, serial I/O, and timers, etc. Figures 2.1.2 to 2.1.5 are location of peripheral unit control registers. Any part of the SFR area that is not occupied is reserved and cannot be used for other purposes.
The special page vector table is mapped to $FFE00_{16}$ to $FFFDB_{16}$. If the starting addresses of subroutines or the destination addresses of jumps are stored here, subroutine call instructions and jump instructions can be used as 2-byte instructions, reducing the number of program steps.
In memory expansion mode and microprocessor mode, a part of the spaces are reserved and cannot be used. The following spaces cannot be used.

- The space between 01000_{16} and $02BFF_{16}$ (in memory expansion and microprocessor modes)
- The space between $B0000_{16}$ and $CFFFF_{16}$ (in memory expansion mode)

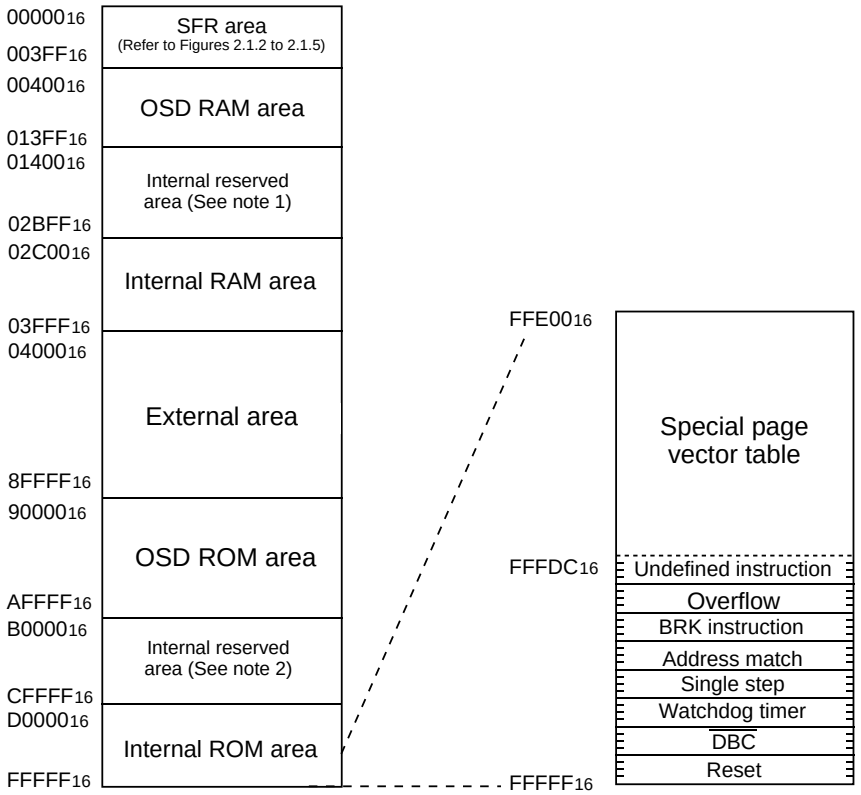

Notes 1: During memory expansion and microprocessor modes, cannot be used.
2: During memory expansion mode, cannot be used.

Figure 2.1.1 Memory map

0000_{16}	
0001_{16}	
0002_{16}	
0003_{16}	
0004_{16}	Processor mode register 0 (PM0)
0005_{16}	Processor mode register 1 (PM1)
0006_{16}	System clock control register 0 (CM0)
0007_{16}	System clock control register 1 (CM1)
0008_{16}	Chip select control register (CSR)
0009_{16}	Address match interrupt enable register (AIER)
$000A_{16}$	Protect register (PRCR)
$000B_{16}$	
$000C_{16}$	
$000D_{16}$	
$000E_{16}$	Watchdog timer start register (WDTS)
$000F_{16}$	Watchdog timer control register (WDC)
0010_{16}	Address match interrupt register 0 (RMAD0)
0011_{16}	
0012_{16}	
0013_{16}	
0014_{16}	Address match interrupt register 1 (RMAD1)
0015_{16}	
0016_{16}	
0017_{16}	
0018_{16}	
0019_{16}	
$001A_{16}$	
$001B_{16}$	
$001C_{16}$	
$001D_{16}$	
$001E_{16}$	
$001F_{16}$	
0020_{16}	DMA0 source pointer (SAR0)
0021_{16}	
0022_{16}	
0023_{16}	
0024_{16}	DMA0 destination pointer (DAR0)
0025_{16}	
0026_{16}	
0027_{16}	
0028_{16}	DMA0 transfer counter (TCR0)
0029_{16}	
$002A_{16}$	
$002B_{16}$	
$002C_{16}$	DMA0 control register (DM0CON)
$002D_{16}$	
$002E_{16}$	
$002F_{16}$	
0030_{16}	DMA1 source pointer (SAR1)
0031_{16}	
0032_{16}	
0033_{16}	
0034_{16}	DMA1 destination pointer (DAR1)
0035_{16}	
0036_{16}	
0037_{16}	
0038_{16}	DMA1 transfer counter (TCR1)
0039_{16}	
$003A_{16}$	
$003B_{16}$	
$003C_{16}$	DMA1 control register (DM1CON)
$003D_{16}$	
$003E_{16}$	
$003F_{16}$	

0040_{16}	
0041_{16}	
0042_{16}	
0043_{16}	
0044_{16}	OSD1 interrupt control register (OSD1IC)
0045_{16}	Interrupt control reserved register 0 (RE0IC)
0046_{16}	Interrupt control reserved register 1 (RE1IC)
0047_{16}	Interrupt control reserved register 2 (RE2IC)
0048_{16}	OSD2 interrupt control register (OSD2IC)
0049_{16}	Multi-master I^2C-BUS interface 1 interrupt control register (IIC1IC)
$004A_{16}$	Bus collision detection interrupt control register (BCNIC)
$004B_{16}$	DMA0 interrupt control register (DM0IC)
$004C_{16}$	DMA1 interrupt control register (DM1IC)
$004D_{16}$	Multi-master I^2C-BUS interface 0 interrupt control register (IIC0IC)
$004E_{16}$	A-D conversion interrupt control register (ADIC)
$004F_{16}$	UART2 transmit interrupt control register (S2TIC)
0050_{16}	UART2 receive interrupt control register (S2RIC)
0051_{16}	UART0 transmit interrupt control register (S0TIC)
0052_{16}	UART0 receive interrupt control register (S0RIC)
0053_{16}	Data slicer interrupt control register (DSIC)
0054_{16}	VSYNC interrupt control register (VSYNCIC)
0055_{16}	Timer A0 interrupt control register (TA0IC)
0056_{16}	Timer A1 interrupt control register (TA1IC)
0057_{16}	Timer A2 interrupt control register (TA2IC)
0058_{16}	Timer A3 interrupt control register (TA3IC)
0059_{16}	Timer A4 interrupt control register (TA4IC)
$005A_{16}$	Timer B0 interrupt control register (TB0IC)
$005B_{16}$	Timer B1 interrupt control register (TB1IC)
$005C_{16}$	Timer B2 interrupt control register (TB2IC)
$005D_{16}$	INT0 interrupt control register (INT0IC)
$005E_{16}$	INT1 interrupt control register (INT1IC)
$005F_{16}$	Interrupt control reserved register 3 (RE3IC)
0060_{16}	
≈	≈
$01FF_{16}$	

Figure 2.1.2 Location of peripheral unit control registers (1)

0200_{16}	
0201_{16}	SPRITE OSD control register (SC)
0202_{16}	OSD control register 1 (OC1)
0203_{16}	OSD control register 2 (OC2)
0204_{16}	Horizontal position register (HP)
0205_{16}	Clock control register (CS)
0206_{16}	I/O polarity control register (PC)
0207_{16}	OSD control register 3 (OC3)
0208_{16} 0209_{16}	Raster color register (RSC)
$020A_{16}$	
$020B_{16}$	
$020C_{16}$ $020D_{16}$	Top border control register (TBR)
$020E_{16}$ $020F_{16}$	Bottom border control register (BBR)
0210_{16}	Block control register 1 (BC1)
0211_{16}	Block control register 2 (BC2)
0212_{16}	Block control register 3 (BC3)
0213_{16}	Block control register 4 (BC4)
0214_{16}	Block control register 5 (BC5)
0215_{16}	Block control register 6 (BC6)
0216_{16}	Block control register 7 (BC7)
0217_{16}	Block control register 8 (BC8)
0218_{16}	Block control register 9 (BC9)
0219_{16}	Block control register 10 (BC10)
$021A_{16}$	Block control register 11(BC11)
$021B_{16}$	Block control register 12 (BC12)
$021C_{16}$	Block control register 13 (BC13)
$021D_{16}$	Block control register 14 (BC14)
$021E_{16}$	Block control register 15 (BC15)
$021F_{16}$	Block control register 16 (BC16)
0220_{16} 0221_{16}	Vertical position register 1 (VP1)
0222_{16} 0223_{16}	Vertical position register 2 (VP2)
0224_{16} 0225_{16}	Vertical position register 3 (VP3)
0226_{16} 0227_{16}	Vertical position register 4 (VP4)
0228_{16} 0229_{16}	Vertical position register 5 (VP5)
$022A_{16}$ $022B_{16}$	Vertical position register 6 (VP6)
$022C_{16}$ $022D_{16}$	Vertical position register 7 (VP7)
$022E_{16}$ $022F_{16}$	Vertical position register 8 (VP8)
0230_{16} 0231_{16}	Vertical position register 9 (VP9)
0232_{16} 0233_{16}	Vertical position register 10 (VP10)
0234_{16} 0235_{16}	Vertical position register 11 (VP11)
0236_{16} 0237_{16}	Vertical position register 12 (VP12)
0238_{16} 0239_{16}	Vertical position register 13 (VP13)
$023A_{16}$ $023B_{16}$	Vertical position register 14 (VP14)
$023C_{16}$ $023D_{16}$	Vertical position register 15 (VP15)
$023E_{16}$ $023F_{16}$	Vertical position register 16 (VP16)

0240_{16} 0241_{16}	Color palette register 1 (CR1)
0242_{16} 0243_{16}	Color palette register 2 (CR2)
0244_{16} 0245_{16}	Color palette register 3 (CR3)
0246_{16} 0247_{16}	Color palette register 4 (CR4)
0248_{16} 0249_{16}	Color palette register 5 (CR5)
$024A_{16}$ $024B_{16}$	Color palette register 6 (CR6)
$024C_{16}$ $024D_{16}$	Color palette register 7 (CR7)
$024E_{16}$ $024F_{16}$	Color palette register 9 (CR9)
0250_{16} 0251_{16}	Color palette register 10 (CR10)
0252_{16} 0253_{16}	Color palette register 11 (CR11)
0254_{16} 0255_{16}	Color palette register 12 (CR12)
0256_{16} 0257_{16}	Color palette register 13 (CR13)
0258_{16} 0259_{16}	Color palette register 14 (CR14)
$025A_{16}$ $025B_{16}$	Color palette register 15 (CR15)
$025C_{16}$	
$025D_{16}$	OSD reserved register 1 (OR1)
$025E_{16}$	
$025F_{16}$	OSD control register 4 (OC4)
0260_{16}	Data slicer control register 1 (DSC1)
0261_{16}	Data slicer control register 2 (DSC2)
0262_{16} 0263_{16}	Caption data register 1 (CD1)
0264_{16} 0265_{16}	Caption data register 2 (CD2)
0266_{16}	Caption position register (CPS)
0267_{16}	Data slicer reserved register 2 (DR2)
0268_{16}	Data slicer reserved register 1 (DR1)
0269_{16}	Clock run-in detect register (CRD)
$026A_{16}$	Data clock position register (DPS)
$026B_{16}$	
≈	≈
$026F_{16}$	
0270_{16} 0271_{16}	Left border control register (LBR)
0272_{16} 0273_{16}	Right border control register (RBR)
0274_{16} 0275_{16}	SPRITE vertical position register 1 (VS1)
0276_{16} 0277_{16}	SPRITE vertical position register 2 (VS2)
0278_{16} 0279_{16}	SPRITE horizontal position register (HS)
$027A_{16}$	OSD reserved register 4 (OR4)
$027B_{16}$	OSD reserved register 3 (OR3)
$027C_{16}$	OSD reserved register 2 (OR2)
$027D_{16}$	Peripheral mode register (PM)
$027E_{16}$	HSYNC counter register (HC)
$027F_{16}$	HSYNC counter latch
0280_{16}	
≈	≈
$02DF_{16}$	

Figure 2.1.3 Location of peripheral unit control registers (2)

02E0$_{16}$	I^{2}C0 data shift register (IIC0S0)
02E1$_{16}$	I^{2}C0 address register (IIC0S0D)
02E2$_{16}$	I^{2}C0 status register (IIC0S1)
02E3$_{16}$	I^{2}C0 control register (IIC0S1D)
02E4$_{16}$	I^{2}C0 clock control register (IIC0S2)
02E5$_{16}$	I^{2}C0 port selection register (IIC0S2D)
02E6$_{16}$	I^{2}C0 transmit buffer register (IIC0S0S)
02E7$_{16}$	
02E8$_{16}$	I^{2}C1 data shift register (IIC1S0)
02E9$_{16}$	I^{2}C1 address register (IIC1S0D)
02EA$_{16}$	I^{2}C1 status register (IIC1S1)
02EB$_{16}$	I^{2}C1 control register (IIC1S1D)
02EC$_{16}$	I^{2}C1 clock control register (IIC1S2)
02ED$_{16}$	I^{2}C1 port selection register (IIC1S2D)
02EE$_{16}$	I^{2}C1 transmit buffer register (IIC1S0S)
02EF$_{16}$	
≈	≈
0339$_{16}$	
0340$_{16}$	Reserved register 1 (INVC1)
0341$_{16}$	
0342$_{16}$	
0343$_{16}$	
0344$_{16}$	
0345$_{16}$	
0346$_{16}$	
0347$_{16}$	
0348$_{16}$	Reserved register 0 (INVC0)
0349$_{16}$	
≈	≈
035E$_{16}$	
035F$_{16}$	Interrupt request cause select register (IFSR)
0360$_{16}$	
0361$_{16}$	
0362$_{16}$	Reserved register 3 (INVC3)
0363$_{16}$	
0364$_{16}$	
0365$_{16}$	
0366$_{16}$	Reserved register 4 (INVC4)
0367$_{16}$	
0368$_{16}$	
0369$_{16}$	
036A$_{16}$	
036B$_{16}$	
036C$_{16}$	
036D$_{16}$	
036E$_{16}$	
036F$_{16}$	
0370$_{16}$	
0371$_{16}$	
0372$_{16}$	
0373$_{16}$	
0374$_{16}$	
0375$_{16}$	
0376$_{16}$	Reserved register 5 (INVC5)
0377$_{16}$	UART2 special mode register (U2SMR)
0378$_{16}$	UART2 transmit/receive mode register (U2MR)
0379$_{16}$	UART2 bit rate generator (U2BRG)
037A$_{16}$	UART2 transmit buffer register (U2TB)
037B$_{16}$	
037C$_{16}$	UART2 transmit/receive control register 0 (U2C0)
037D$_{16}$	UART2 transmit/receive control register 1 (U2C1)
037E$_{16}$	UART2 receive buffer register (U2RB)
037F$_{16}$	

0380$_{16}$	Count start flag (TABSR)
0381$_{16}$	Clock prescaler reset flag (CPSRF)
0382$_{16}$	One-shot start flag (ONSF)
0383$_{16}$	Trigger select register (TRGSR)
0384$_{16}$	Up-down flag (UDF)
0385$_{16}$	
0386$_{16}$	Timer A0 register (TA0)
0387$_{16}$	
0388$_{16}$	Timer A1 register (TA1)
0389$_{16}$	
038A$_{16}$	Timer A2 register (TA2)
038B$_{16}$	
038C$_{16}$	Timer A3 register (TA3)
038D$_{16}$	
038E$_{16}$	Timer A4 register (TA4)
038F$_{16}$	
0390$_{16}$	Timer B0 register (TB0)
0391$_{16}$	
0392$_{16}$	Timer B1 register (TB1)
0393$_{16}$	
0394$_{16}$	Timer B2 register (TB2)
0395$_{16}$	
0396$_{16}$	Timer A0 mode register (TA0MR)
0397$_{16}$	Timer A1 mode register (TA1MR)
0398$_{16}$	Timer A2 mode register (TA2MR)
0399$_{16}$	Timer A3 mode register (TA3MR)
039A$_{16}$	Timer A4 mode register (TA4MR)
039B$_{16}$	Timer B0 mode register (TB0MR)
039C$_{16}$	Timer B1 mode register (TB1MR)
039D$_{16}$	Timer B2 mode register (TB2MR)
039E$_{16}$	
039F$_{16}$	
03A0$_{16}$	UART0 transmit/receive mode register (U0MR)
03A1$_{16}$	UART0 bit rate generator (U0BRG)
03A2$_{16}$	UART0 transmit buffer register (U0TB)
03A3$_{16}$	
03A4$_{16}$	UART0 transmit/receive control register 0 (U0C0)
03A5$_{16}$	UART0 transmit/receive control register 1 (U0C1)
03A6$_{16}$	UART0 receive buffer register (U0RB)
03A7$_{16}$	
03A8$_{16}$	Reserved register 2 (INVC2)
03A9$_{16}$	
03AA$_{16}$	
03AB$_{16}$	
03AC$_{16}$	
03AD$_{16}$	
03AE$_{16}$	
03AF$_{16}$	
03B0$_{16}$	UART transmit/receive control register 2 (UCON)
03B1$_{16}$	
03B2$_{16}$	
03B3$_{16}$	
03B4$_{16}$	
03B5$_{16}$	
03B6$_{16}$	
03B7$_{16}$	
03B8$_{16}$	DMA0 request cause select register (DM0SL)
03B9$_{16}$	
03BA$_{16}$	DMA1 request cause select register (DM1SL)
03BB$_{16}$	
03BC$_{16}$	
03BD$_{16}$	
03BE$_{16}$	
03BF$_{16}$	

Figure 2.1.4 Location of peripheral unit control registers (3)

$03C0_{16}$	
$03C1_{16}$	
$03C2_{16}$	
$03C3_{16}$	
$03C4_{16}$	A-D register 0 (AD0)
$03C5_{16}$	
$03C6_{16}$	A-D register 1 (AD1)
$03C7_{16}$	
$03C8_{16}$	A-D register 2 (AD2)
$03C9_{16}$	
$03CA_{16}$	A-D register 3 (AD3)
$03CB_{16}$	
$03CC_{16}$	A-D register 4 (AD4)
$03CD_{16}$	
$03CE_{16}$	A-D register 5 (AD5)
$03CF_{16}$	
$03D0_{16}$	
$03D1_{16}$	
$03D2_{16}$	
$03D3_{16}$	
$03D4_{16}$	A-D control register 2 (ADCON2)
$03D5_{16}$	
$03D6_{16}$	A-D control register 0 (ADCON0)
$03D7_{16}$	A-D control register 1 (ADCON1)
$03D8_{16}$	D-A register 0 (DA0)
$03D9_{16}$	
$03DA_{16}$	D-A register 1 (DA1)
$03DB_{16}$	
$03DC_{16}$	D-A control register (DACON)
$03DD_{16}$	
$03DE_{16}$	
$03DF_{16}$	
$03E0_{16}$	Port P0 register(P0)
$03E1_{16}$	Port P1 register (P1)
$03E2_{16}$	Port P0 direction register (PD0)
$03E3_{16}$	Port P1 direction register (PD1)
$03E4_{16}$	Port P2 register (P2)
$03E5_{16}$	Port P3 register (P3)
$03E6_{16}$	Port P2 direction register (PD2)
$03E7_{16}$	Port P3 direction register (PD3)
$03E8_{16}$	Port P4 register (P4)
$03E9_{16}$	Port P5 register (P5)
$03EA_{16}$	Port P4 direction register (PD4)
$03EB_{16}$	Port P5 direction register (PD5)
$03EC_{16}$	Port P6 register (P6)
$03ED_{16}$	Port P7 register (P7)
$03EE_{16}$	Port P6 direction register (PD6)
$03EF_{16}$	Port P7 direction register (PD7)
$03F0_{16}$	Port P8 register (P8)
$03F1_{16}$	Port P9 register (P9)
$03F2_{16}$	Port P8 direction register (PD8)
$03F3_{16}$	Port P9 direction register (PD9)
$03F4_{16}$	Port P10 register (P10)
$03F5_{16}$	
$03F6_{16}$	Port P10 direction register (PD10)
$03F7_{16}$	
$03F8_{16}$	
$03F9_{16}$	
$03FA_{16}$	
$03FB_{16}$	
$03FC_{16}$	Pull-up control register 0 (PUR0)
$03FD_{16}$	Pull-up control register 1 (PUR1)
$03FE_{16}$	Pull-up control register 2 (PUR2)
$03FF_{16}$	Port control register (PCR)

Figure 2.1.5 Location of peripheral unit control registers (4)

2.2 Central Processing Unit (CPU)

The CPU has a total of 13 registers shown in Figure 2.2.1. Seven of these registers (R0, R1, R2, R3, A0, A1, and FB) come in two sets; therefore, these have two register banks.

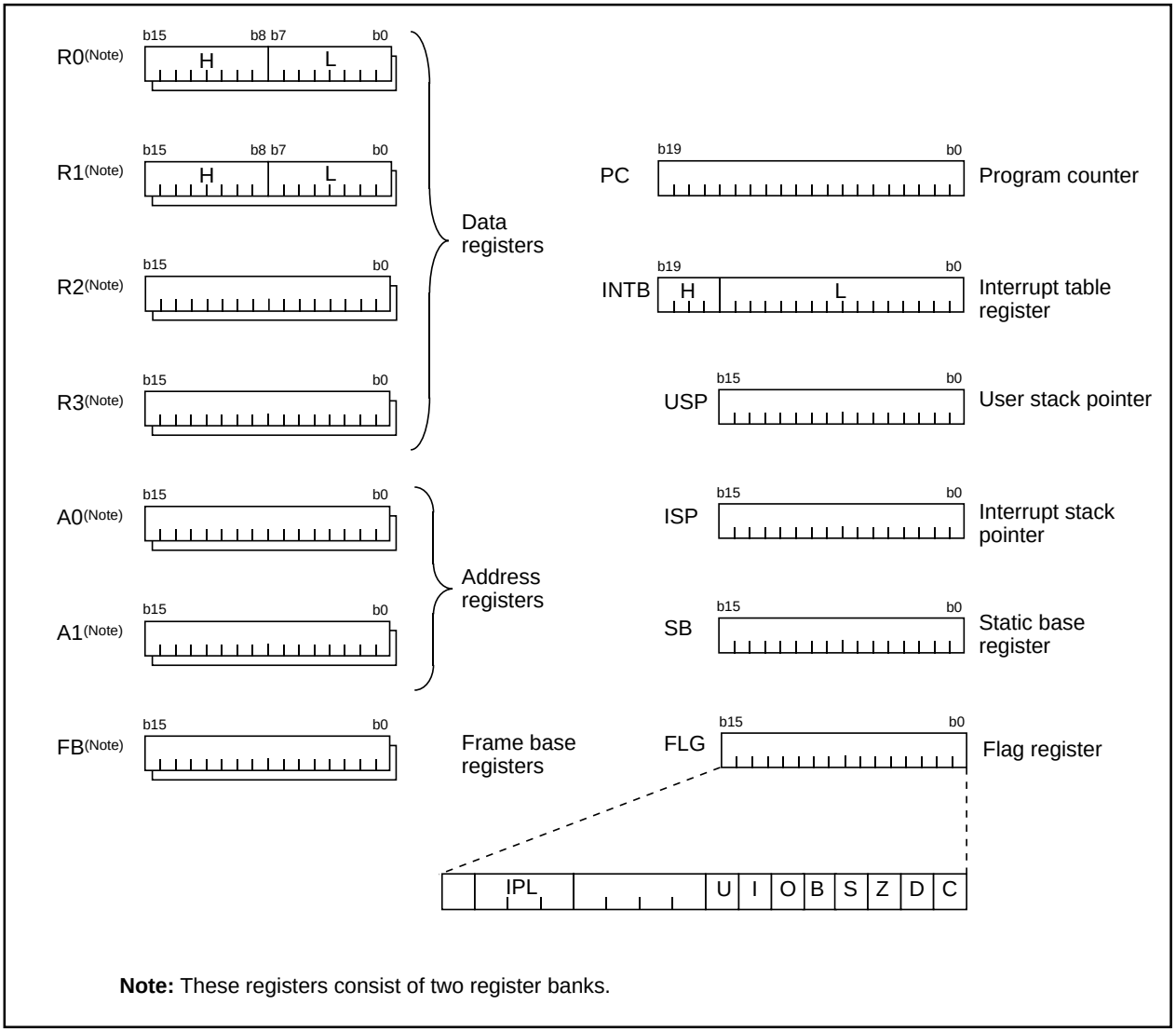

Figure 2.2.1 Central processing unit register

2.2.1 Data Registers (R0, R0H, R0L, R1, R1H, R1L, R2, and R3)

Data registers (R0, R1, R2, and R3) are configured with 16 bits, and are used primarily for transfer and arithmetic/logic operations.

Registers R0 and R1 each can be used as separate 8-bit data registers, high-order bits as (R0H/R1H), and low-order bits as (R0L/R1L). In some instructions, registers R2 and R0, as well as R3 and R1 can use as 32-bit data registers (R2R0/R3R1).

2.2.2 Address Registers (A0 and A1)

Address registers (A0 and A1) are configured with 16 bits, and have functions equivalent to those of data registers. These registers can also be used for address register indirect addressing and address register relative addressing.

In some instructions, registers A1 and A0 can be combined for use as a 32-bit address register (A1A0).

2.2.3 Frame Base Register (FB)

Frame base register (FB) is configured with 16 bits, and is used for FB relative addressing.

2.2.4 Program Counter (PC)

Program counter (PC) is configured with 20 bits, indicating the address of an instruction to be executed.

2.2.5 Interrupt Table Register (INTB)

Interrupt table register (INTB) is configured with 20 bits, indicating the start address of an interrupt vector table.

2.2.6 Stack Pointer (USP/ISP)

Stack pointer comes in two types: user stack pointer (USP) and interrupt stack pointer (ISP), each configured with 16 bits.

Your desired type of stack pointer (USP or ISP) can be selected by a stack pointer select flag (U flag). This flag is located at the position of bit 7 in the flag register (FLG).

2.2.7 Static Base Register (SB)

Static base register (SB) is configured with 16 bits, and is used for SB relative addressing.

2.2.8 Flag Register (FLG)

Flag register (FLG) is configured with 11 bits, each bit is used as a flag. Figure 2.2.2 shows the flag register (FLG). The following explains the function of each flag:

- **Bit 0: Carry flag (C flag)**
  This flag retains a carry, borrow, or shift-out bit that has occurred in the arithmetic/logic unit.
- **Bit 1: Debug flag (D flag)**
  This flag enables a single-step interrupt.
  When this flag is “1”, a single-step interrupt is generated after instruction execution. This flag is cleared to “0” when the interrupt is acknowledged.
- **Bit 2: Zero flag (Z flag)**
  This flag is set to “1” when an arithmetic operation resulted in 0; otherwise, cleared to “0”.
- **Bit 3: Sign flag (S flag)**
  This flag is set to “1” when an arithmetic operation resulted in a negative value; otherwise, cleared to “0”.
- **Bit 4: Register bank select flag (B flag)**
  This flag chooses a register bank. Register bank 0 is selected when this flag is “0” ; register bank 1 is selected when this flag is “1”.

- **Bit 5: Overflow flag (O flag)**
  This flag is set to “1” when an arithmetic operation resulted in overflow; otherwise, cleared to “0”.
- **Bit 6: Interrupt enable flag (I flag)**
  This flag enables a maskable interrupt.
  An interrupt is disabled when this flag is “0”, and is enabled when this flag is “1”. This flag is cleared to “0” when the interrupt is acknowledged.
- **Bit 7: Stack pointer select flag (U flag)**
  Interrupt stack pointer (ISP) is selected when this flag is “0” ; user stack pointer (USP) is selected when this flag is “1”.
  This flag is cleared to “0” when a hardware interrupt is acknowledged or an INT instruction of software interrupt Nos. 0 to 31 is executed.
- **Bits 8 to 11: Reserved area**
- **Bits 12 to 14: Processor interrupt priority level (IPL)**
  Processor interrupt priority level (IPL) is configured with three bits, for specification of up to eight processor interrupt priority levels from level 0 to level 7.
  If a requested interrupt has priority greater than the processor interrupt priority level (IPL), the interrupt is enabled.
- **Bit 15: Reserved area**

The C, Z, S, and O flags are changed when instructions are executed. See the software manual for details.

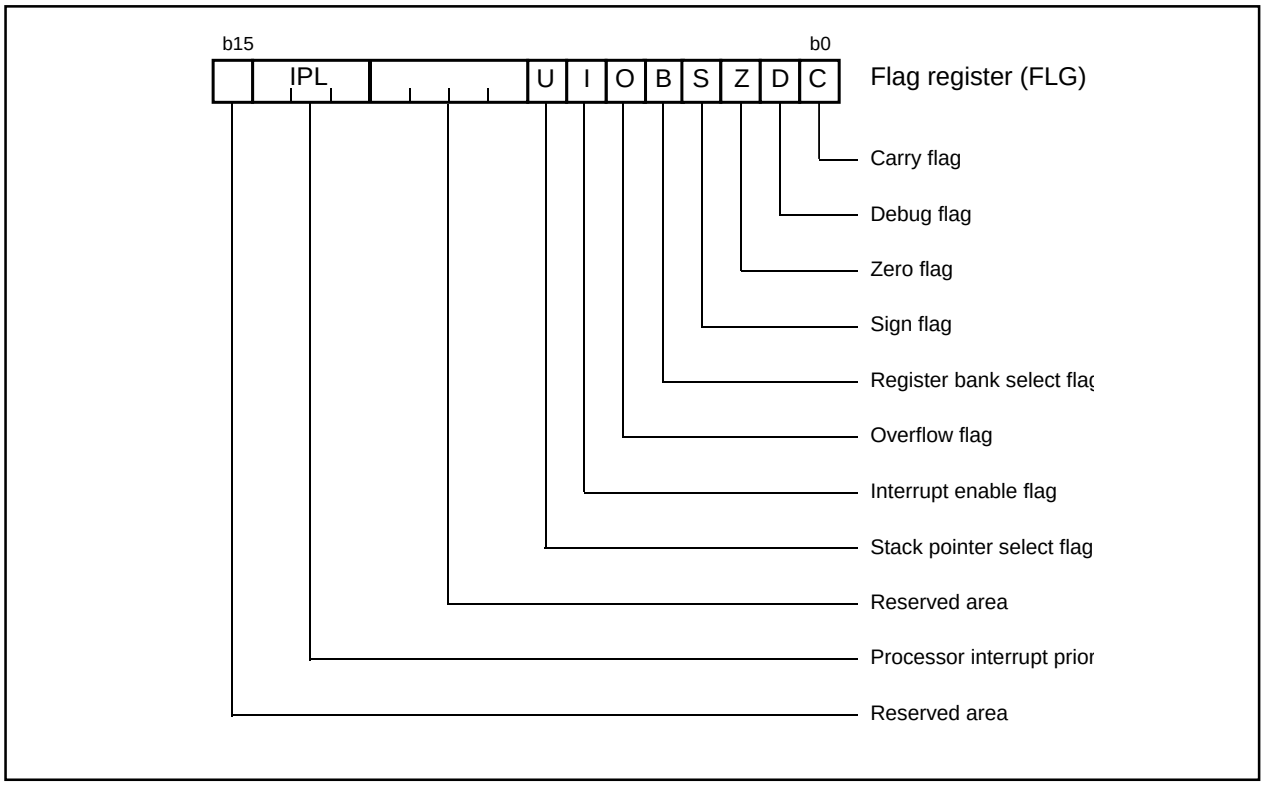

Figure 2.2.2 Flag register (FLG)

2.3 Reset

There are two kinds of resets; hardware and software. In both cases, operation is the same after the reset. (See “Software Reset” for details of software resets.) This section explains on hardware resets.

When the supply voltage is in the range where operation is guaranteed, a reset is effected by holding the reset pin level “L” (0.2VCC max.) for at least 20 cycles. When the reset pin level is then returned to the “H” level while main clock is stable, the reset status is cancelled and program execution resumes from the address in the reset vector table.

Figure 2.3.1 shows the example reset circuit. Figure 2.3.2 shows the reset sequence.

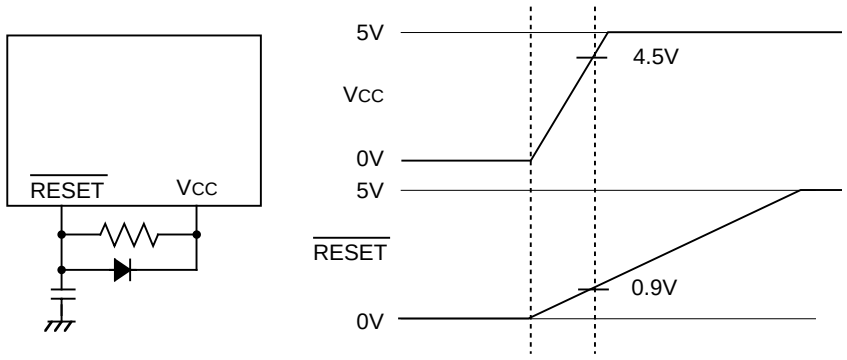

Example when f(XIN) = 10 MHz and VCC = 5V.

Figure 2.3.1 Example reset circuit

2.3.1 Software Reset

Writing “1” to bit 3 of the processor mode register 0 (address 0004_{16}) applies a (software) reset to the microcomputer. A software reset has almost the same effect as a hardware reset. The contents of internal RAM are preserved.

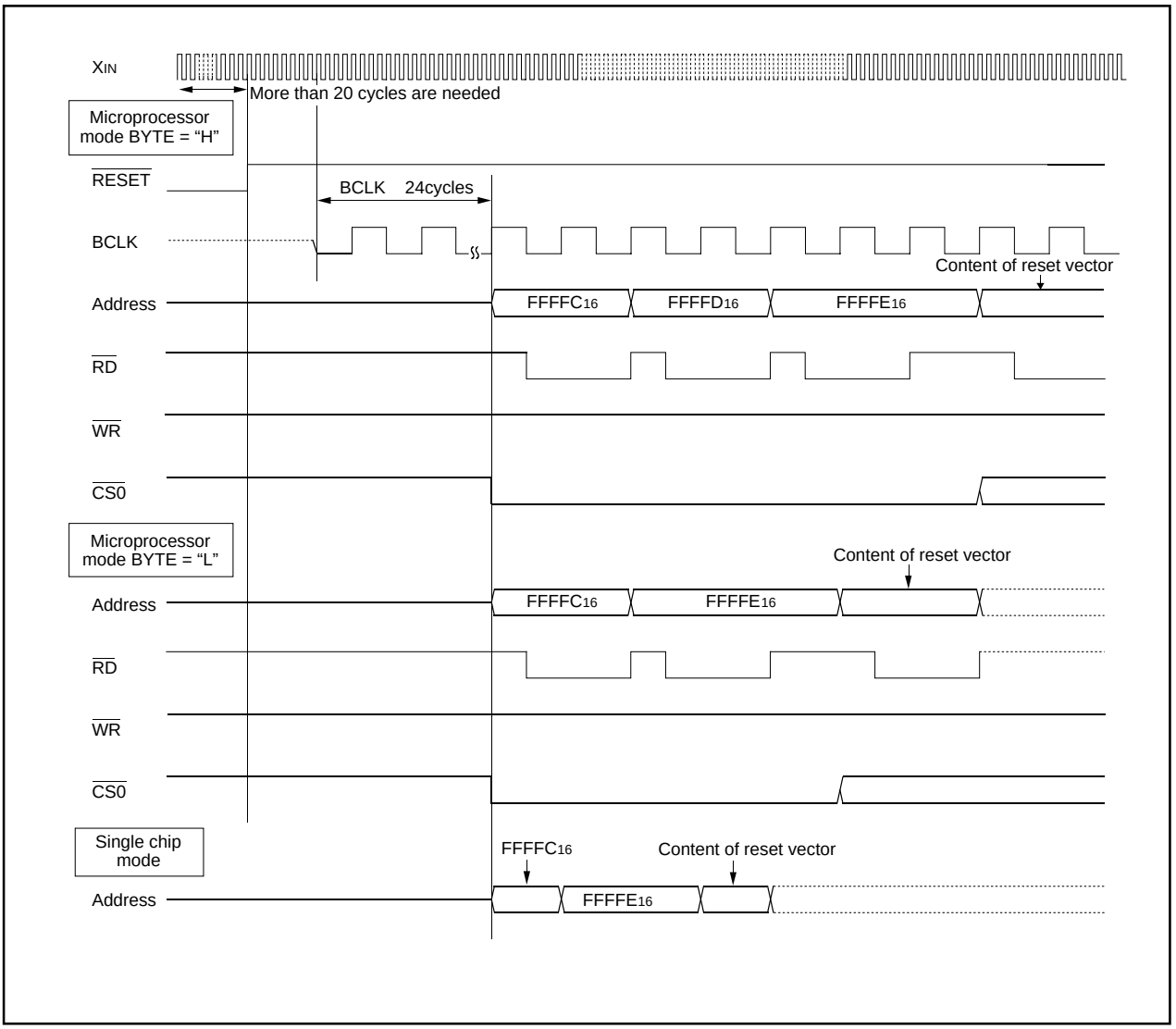

Figure 2.3.2 Reset sequence

2.3.2 Pin Status When $\overline{\text{RESET}}$ Pin Level is "L"

Table 2.3.1 shows the statuses of the other pins while the $\overline{\text{RESET}}$ pin level is "L". Figures 2.3.3 and 2.3.4 show the internal status of the microcomputer immediately after the reset is cancelled.

Table 2.3.1 Pin status when $\overline{\text{RESET}}$ pin level is "L"

Pin name	Status		
	CNVSS = VSS	CNVSS = VCC	
		BYTE = VSS	BYTE = VCC
P0	Input port (floating)	Data input (floating)	Data input (floating)
P1	Input port (floating)	Data input (floating)	Input port (floating)
P2, P3, P40 to P43	Input port (floating)	Address output (undefined)	Address output (undefined)
P44	Input port (floating)	$\overline{\text{CS0}}$ output ("H" level is output)	$\overline{\text{CS0}}$ output ("H" level is output)
P45 to P47	Input port (floating)	Input port (floating) (pull-up resistor is on)	Input port (floating) (pull-up resistor is on)
P50	Input port (floating)	$\overline{\text{WR}}$ output ("H" level is output)	$\overline{\text{WR}}$ output ("H" level is output)
P51	Input port (floating)	$\overline{\text{BHE}}$ output (undefined)	$\overline{\text{BHE}}$ output (undefined)
P52	Input port (floating)	$\overline{\text{RD}}$ output ("H" level is output)	$\overline{\text{RD}}$ output ("H" level is output)
P53	Input port (floating)	BCLK output	BCLK output
P54	Input port (floating)	$\overline{\text{HLDA}}$ output (The output value depends on the input to the $\overline{\text{HOLD}}$ pin)	$\overline{\text{HLDA}}$ output (The output value depends on the input to the $\overline{\text{HOLD}}$ pin)
P55	Input port (floating)	$\overline{\text{HOLD}}$ input (floating)	$\overline{\text{HOLD}}$ input (floating)
P56	Input port (floating)	ALE output ("L" level is output)	ALE output ("L" level is output)
P57	Input port (floating)	$\overline{\text{RDY}}$ input (floating)	$\overline{\text{RDY}}$ input (floating)
P60 to P63, P67, P7, P82, P83, P86, P87, P9, P10	Input port (floating)	Input port (floating)	Input port (floating)
R, G, B, OUT1, OUT2	Output port		
CVIN, VHOLD, HLF	Input/output port		
OSC1	Input port		
OSC2	Output port		

Processor mode register 0 (Note)	(0004_{16})···	00_{16}
Processor mode register 1	(0005_{16})···	0 0 0 0 0 X 0 0
System clock control register 0	(0006_{16})···	48_{16}
System clock control register 1	(0007_{16})···	20_{16}
Chip select control register	(0008_{16})···	01_{16}
Address match interrupt enable register	(0009_{16})···	X X X X X X 0 0
Protect register	($000A_{16}$)···	X X X X X 0 0 0
Watchdog timer control register	($000F_{16}$)···	0 0 0 ? ? ? ? ?
Address match interrupt register 0	(0010_{16})···	00_{16}
	(0011_{16})···	00_{16}
	(0012_{16})···	X X X X 0 0 0 0
Address match interrupt register 1	(0014_{16})···	00_{16}
	(0015_{16})···	00_{16}
	(0016_{16})···	X X X X 0 0 0 0
DMA0 control register	($002C_{16}$)···	0 0 0 0 0 ? 0 0
DMA1 control register	($003C_{16}$)···	0 0 0 0 0 ? 0 0
OSD1 interrupt control register	(0044_{16})···	X X X X ? 0 0 0
OSD2 interrupt control register	(0048_{16})···	X X X X ? 0 0 0
Multi-master I²C-BUS interface 1 interrupt control register	(0049_{16})···	X X 0 0 ? 0 0 0
Bus collision detection interrupt control register	($004A_{16}$)···	X X X X ? 0 0 0
DMA0 interrupt control register	($004B_{16}$)···	X X X X ? 0 0 0
DMA1 interrupt control register	($004C_{16}$)···	X X X X ? 0 0 0
Multi-master I²C-BUS interface 0 interrupt control register	($004D_{16}$)···	X X X X ? 0 0 0
A-D conversion interrupt control register	($004E_{16}$)···	X X X X ? 0 0 0
UART2 transmit interrupt control register	($004F_{16}$)···	X X X X ? 0 0 0
UART2 receive interrupt control register	(0050_{16})···	X X X X ? 0 0 0
UART0 transmit interrupt control register	(0051_{16})···	X X X X ? 0 0 0
UART0 receive interrupt control register	(0052_{16})···	X X X X ? 0 0 0
Data slicer interrupt control register	(0053_{16})···	X X X X ? 0 0 0
VSYNC interrupt control register	(0054_{16})···	X X X X ? 0 0 0
Timer A0 interrupt control register	(0055_{16})···	X X X X ? 0 0 0
Timer A1 interrupt control register	(0056_{16})···	X X X X ? 0 0 0
Timer A2 interrupt control register	(0057_{16})···	X X X X ? 0 0 0
Timer A3 interrupt control register	(0058_{16})···	X X X X ? 0 0 0
Timer A4 interrupt control register	(0059_{16})···	X X X X ? 0 0 0
Timer B0 interrupt control register	($005A_{16}$)···	X X X X ? 0 0 0
Timer B1 interrupt control register	($005B_{16}$)···	X X X X ? 0 0 0
Timer B2 interrupt control register	($005C_{16}$)···	X X X X ? 0 0 0
INT0 interrupt control register	($005D_{16}$)···	X X 0 0 ? 0 0 0
INT1 interrupt control register	($005E_{16}$)···	X X 0 0 ? 0 0 0
SPRITE OSD control register	(0201_{16})···	X X X 0 0 0 0 0
OSD control register 1	(0202_{16})···	00_{16}
OSD control register 2	(0203_{16})···	00_{16}
Horizontal position register	(0204_{16})···	00_{16}
Clock control register	(0205_{16})···	00_{16}
I/O polarity control register	(0206_{16})···	1 0 0 0 0 0 0 0
OSD control register 3	(0207_{16})···	00_{16}
Raster color register	(0208_{16})···	00_{16}
	(0209_{16})···	00_{16}
OSD reserved register 1	($025D_{16}$)···	00_{16}
OSD control register 4	($025F_{16}$)···	X X X X X X 0 0
Data slicer control register 1	(0260_{16})···	00_{16}
Data slicer control register 2	(0261_{16})···	? 0 ? 0 ? ? 0 ?
Caption position register	(0266_{16})···	0 0 ? 0 0 0 0 0
Data slicer reserved register 2	(0267_{16})···	00_{16}
Data slicer reserved register 1	(0268_{16})···	00_{16}
Clock run-in detect register	(0269_{16})···	00_{16}
Data clock position register	($026A_{16}$)···	X X X 0 0 0 0 1
Left border control register	(0270_{16})···	01_{16}
	(0271_{16})···	X X X X X 0 0 0
Right border control register	(0272_{16})···	00_{16}
	(0273_{16})···	X X X X X 0 0 0
SPRITE horizontal position register (high-order)	(0279_{16})···	X X X X X 0 0 0
OSD reserved register 4	($027A_{16}$)···	X 0 0 0 0 0 0 0
OSD reserved register 3	($027B_{16}$)···	00_{16}
OSD reserved register 2	($027C_{16}$)···	00_{16}
Peripheral mode register	($027D_{16}$)···	0 X X 0 0 0 0 0
HSYNC counter register	($027E_{16}$)···	X X X 0 0 X 0 0

X : Nothing is mapped to this bit
? : Undefined

The content of other registers and RAM is undefined when the microcomputer is reset. The initial values must therefore be set.

Note: When the VCC level is applied to the CNVSS pin, it is 03_{16} at a reset.

Figure 2.3.3 Device's internal status after a reset is cleared (1)

I²C0 address register	(02E1₁₆)···	00₁₆
I²C0 status register	(02E2₁₆)···	0 0 0 1 0 0 0 ?
I²C0 control register	(02E3₁₆)···	00₁₆
I²C0 clock control register	(02E4₁₆)···	00₁₆
I²C0 port selection register	(02E5₁₆)···	0 0 ? ? 0 0 0 0
I²C1 address register	(02E9₁₆)···	00₁₆
I²C1 status register	(02EA₁₆)···	0 0 0 1 0 0 0 ?
I²C1 control register	(02EB₁₆)···	00₁₆
I²C1 clock control register	(02EC₁₆)···	00₁₆
I²C1 port selection register	(02ED₁₆)···	0 0 ? ? 0 0 0 0
Reserved register 1	(0340₁₆)···	0 0 0 ? ? ? ? ?
Reserved register 0	(0348₁₆)···	00₁₆
Interrupt request cause select register	(035F₁₆)···	00₁₆
Reserved register 3	(0362₁₆)···	40₁₆
Reserved register 4	(0366₁₆)···	40₁₆
Reserved register 5	(0376₁₆)···	00₁₆
UART2 special mode register	(0377₁₆)···	00₁₆
UART2 transmit/receive mode register	(0378₁₆)···	00₁₆
UART2 transmit/receive control register 0	(037C₁₆)···	08₁₆
UART2 transmit/receive control register 1	(037D₁₆)···	02₁₆
Count start flag	(0380₁₆)···	00₁₆
Clock prescaler reset flag	(0381₁₆)···	0 X X X X X X X
One-shot start flag	(0382₁₆)···	0 0 X 0 0 0 0 0
Trigger select register	(0383₁₆)···	00₁₆
Up-down flag	(0384₁₆)···	00₁₆
Timer A0 mode register	(0396₁₆)···	00₁₆
Timer A1 mode register	(0397₁₆)···	00₁₆
Timer A2 mode register	(0398₁₆)···	00₁₆
Timer A3 mode register	(0399₁₆)···	00₁₆
Timer A4 mode register	(039A₁₆)···	00₁₆
Timer B0 mode register	(039B₁₆)···	0 0 ? X 0 0 0 0
Timer B1 mode register	(039C₁₆)···	0 0 ? X 0 0 0 0
Timer B2 mode register	(039D₁₆)···	0 0 ? X 0 0 0 0
UART0 transmit/receive mode register	(03A0₁₆)···	00₁₆
UART0 transmit/receive control register 0	(03A4₁₆)···	08₁₆
UART0 transmit/receive control register 1	(03A5₁₆)···	02₁₆
Reserved register 2	(03A8₁₆)···	00₁₆
UART transmit/receive control register 2	(03B0₁₆)···	X 0 0 0 0 0 0 0
DMA0 request cause select register	(03B8₁₆)···	00₁₆
DMA1 request cause select register	(03BA₁₆)···	00₁₆
A-D control register 2	(03D4₁₆)···	0 0 0 0 ? ? ? 0
A-D control register 0	(03D6₁₆)···	0 0 0 0 0 ? ? ?
A-D control register 1	(03D7₁₆)···	00₁₆
D-A control register	(03DC₁₆)···	00₁₆
Port P0 direction register	(03E2₁₆)···	00₁₆
Port P1 direction register	(03E3₁₆)···	00₁₆
Port P2 direction register	(03E6₁₆)···	00₁₆
Port P3 direction register	(03E7₁₆)···	00₁₆
Port P4 direction register	(03EA₁₆)···	00₁₆
Port P5 direction register	(03EB₁₆)···	00₁₆
Port P6 direction register	(03EE₁₆)···	00₁₆
Port P7 direction register	(03EF₁₆)···	00₁₆
Port P8 direction register	(03F2₁₆)···	0 0 X 0 0 0 0 0
Port P9 direction register	(03F3₁₆)···	00₁₆
Port P10 direction register	(03F6₁₆)···	00₁₆
Pull-up control register 0	(03FC₁₆)···	00₁₆
Pull-up control register 1(Note)	(03FD₁₆)···	00₁₆
Pull-up control register 2	(03FE₁₆)···	00₁₆
Port control register	(03FF₁₆)···	00₁₆
Data registers (R0/R1/R2/R3)		0000₁₆
Address registers (A0/A1)		0000₁₆
Frame base register (FB)		0000₁₆
Interrupt table register (INTB)		00000₁₆
User stack pointer (USP)		0000₁₆
Interrupt stack pointer (ISP)		0000₁₆
Static base register (SB)		0000₁₆
Flag register (FLG)		0000₁₆

x : Nothing is mapped to this bit
? : Undefined

The content of other registers and RAM is undefined when the microcomputer is reset. The initial values must therefore be set.

Note: When the V_{CC} level is applied to the CNV_{SS} pin, it is 02_{16} at a reset.

Figure 2.3.4 Device's internal status after a reset is cleared (2)

2.4 Processor Mode

2.4.1 Types of Processor Mode

One of three processor modes can be selected: single-chip mode, memory expansion mode, and microprocessor mode. The functions of some pins, the memory map, and the access space differ according to the selected processor mode.

(1) Single-chip mode

In single-chip mode, only internal memory space (SFR, OSD RAM, internal RAM, and internal ROM) can be accessed. Ports P0 to P10 can be used as programmable I/O ports or as I/O ports for the internal peripheral functions.

(2) Memory expansion mode

In memory expansion mode, external memory can be accessed in addition to the internal memory space (SFR, OSD RAM, internal RAM, and internal ROM).

In this mode, some of the pins function as the address bus, the data bus, and as control signals. The number of pins assigned to these functions depends on the bus and register settings. (See “2.4.3 Bus Settings” for details.)

(3) Microprocessor mode

In microprocessor mode, the SFR, OSD RAM, internal RAM, and external memory space can be accessed. The internal ROM area cannot be accessed.

In this mode, some of the pins function as the address bus, the data bus, and as control signals. The number of pins assigned to these functions depends on the bus and register settings. (See “2.4.3 Bus Settings” for details.)

2.4.2 Setting Processor Modes

The processor mode is set using the CNV_{SS} pin and the processor mode bits (bits 1 and 0 at address 0004_{16}). Do not set the processor mode bits to “10_2”.

Regardless of the level of the CNV_{SS} pin, changing the processor mode bits selects the mode. Therefore, never change the processor mode bits when changing the contents of other bits. Also do not attempt to shift to or from the microprocessor mode within the program stored in the internal ROM area.

(1) Applying V_{SS} to CNV_{SS} pin

The microcomputer begins operation in single-chip mode after being reset. Memory expansion mode is selected by writing “01_2” to the processor mode is selected bits.

(2) Applying V_{CC} to CNV_{SS} pin

The microcomputer starts to operate in microprocessor mode after being reset.

Figures 2.4.1 and 2.4.2 show the processor mode register 0 and 1.

Figure 2.4.3 shows the memory maps applicable for each of the modes.

Processor mode register 0 (Note 1)

b7	b6	b5	b4	b3	b2	b1	b0

Symbol	Address	When reset
PM0	0004_{16}	00_{16} (Note 2)

Bit symbol	Bit name	Function	R	W
PM00	Processor mode bit	b1 b0 0 0: Single-chip mode 0 1: Memory expansion mode 1 0: Inhibited 1 1: Microprocessor mode	○	○
PM01			○	○
PM02	R/W mode select bit	0 : $\overline{RD}$,$\overline{BHE}$,$\overline{WR}$ 1 : $\overline{RD}$,$\overline{WRH}$,$\overline{WRL}$	○	○
PM03	Software reset bit	The device is reset when this bit is set to “1”. The value of this bit is “0” when read.	○	○
PM04	Multiplexed bus space select bit	b5 b4 0 0 : Multiplexed bus is not used 0 1 : Allocated to CS2 space 1 0 : Allocated to CS1 space 1 1 : Allocated to entire space (Note 4)	○	○
PM05			○	○
PM06	Port $P4_0$ to $P4_3$ function select bit (Note 3)	0 : Address output 1 : Port function (Address is not output)	○	○
PM07	BCLK output disable bit	0 : BCLK is output 1 : BCLK is not output (Pin is left floating)	○	○

Notes 1: Set bit 1 of the protect register (address $000A_{16}$) to “1” when writing new values to this register.
2: If the V_{CC} voltage is applied to the CNV_{SS}, the value of this register when reset is 03_{16}. (PM00 and PM01 both are set to “1”.)
3: Valid in microprocessor and memory expansion modes.
4: If the entire space is of multiplexed bus in memory expansion mode, choose an 8-bit width.
The processor operates using the separate bus after reset is revoked, so the entire space multiplexed bus cannot be chosen in microprocessor mode.
The higher-order address becomes a port if the entire space multiplexed bus is chosen, so only 256 bytes can be used in each chip select.

Figure 2.4.1 Processor mode register 0

Processor mode register 1 (Note 1)

b7	b6	b5	b4	b3	b2	b1	b0
	0	0	0	0	X	1	0

Symbol	Address	When reset
PM1	0005_{16}	$00000X00_2$

Bit symbol	Bit name	Function	R	W
Reserved bit		Must always be set to “0”	○	○
Reserved bit (Note 2)		Must always be set to “1”	○	○
Nothing is assigned. In an attempt to write to this bit, write “0.” The value, if read, turns out to be indeterminate.			—	—
Reserved bits		Must always be set to “0”	—	○
PM17	Wait bit	0 : No wait state 1 : Wait state inserted	○	○

Notes 1: Set bit 1 of the protect register (address $000A_{16}$) to “1” when writing new values to this register.
2: As this bit becomes “0” at reset, must always be set to “1” after reset release.

Figure 2.4.2 Processor mode register 1

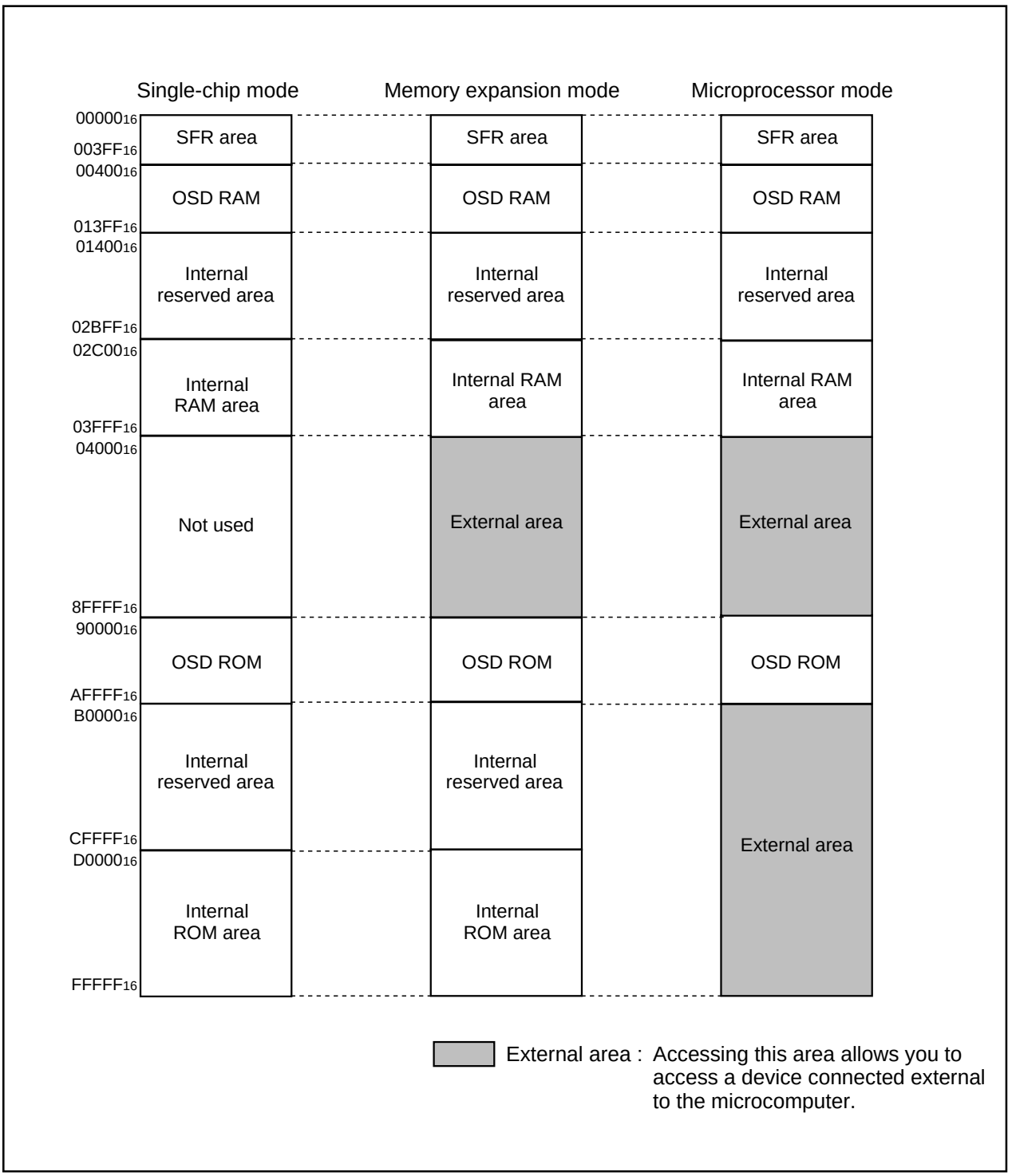

Figure 2.4.3 Memory maps in each processor mode

2.4.3 Bus Settings

The BYTE pin and bits 4 to 6 of the processor mode register 0 (address 0004_{16}) are used to change the bus settings.

Table 2.4.1 shows the factors used to change the bus settings.

Table 2.4.1 Factors for switching bus settings

Bus setting	Switching factor
Switching external address bus width	Bit 6 of processor mode register 0
Switching external data bus width	BYTE pin
Switching between separate and multiplex bus	Bits 4 and 5 of processor mode register 0

(1) Selecting external address bus width

The address bus width for external output in the 1M bytes of address space can be set to 16 bits (64K bytes address space) or 20 bits (1M bytes address space). When bit 6 of the processor mode register 0 is set to “1”, the external address bus width is set to 16 bits, and P2 and P3 become part of the address bus. $P4_0$ to $P4_3$ can be used as programmable I/O ports. When bit 6 of processor mode register 0 is set to “0”, the external address bus width is set to 20 bits, and P2, P3, and $P4_0$ to $P4_3$ become part of the address bus.

(2) Selecting external data bus width

The external data bus width can be set to 8 or 16 bits. (Note, however, that only the separate bus can be set.) When the BYTE pin is “L”, the bus width is set to 16 bits; when “H”, it is set to 8 bits. (The internal bus width is permanently set to 16 bits.)

While operating, fix the BYTE pin either to “H” or to “L.”

(3) Selecting separate/multiplex bus

The bus format can be set to multiplex or separate bus using bits 4 and 5 of the processor mode register 0.

• Separate bus

In this mode, the data and address are input and output separately. The data bus can be set using the BYTE pin to be 8 or 16 bits. When the BYTE pin is “H”, the data bus is set to 8 bits and P0 functions as the data bus and P1 as a programmable I/O port. When the BYTE pin is “L”, the data bus is set to 16 bits and P0 and P1 are both used for the data bus.

When the separate bus is used for access, a software wait can be selected.

• Multiplex bus

In this mode, data and address I/O are time multiplexed. With an 8-bit data bus selected (BYTE pin = “H”), the 8 bits from D_0 to D_7 are multiplexed with A_0 to A_7.

With a 16-bit data bus selected (BYTE pin = “L”), the 8 bits from D_0 to D_7 are multiplexed with A_1 to A_8. D_8 to D_{15} are not multiplexed. In this case, the external devices connected to the multiplexed bus are mapped to the microcomputer’s even addresses (every 2nd address). To access these external devices, access the even addresses as bytes.

The ALE signal latches the address. It is output from $P5_6$.

Before using the multiplex bus for access, be sure to insert a software wait.

In memory expansion mode, select a 8-bit multiplex bus.
The processor operates using the separate bus after reset is revoked, so the entire space multiplexed bus cannot be chosen in microprocessor mode.
The higher-order address becomes a port if the entire space multiplexed bus is chosen, so only 256 bytes can be used in each chip select.

Table 2.4.2 Pin functions for each processor mode

Processor mode	Single-chip mode	Memory expansion mode/microprocessor modes				Memory expansion mode
Multiplexed bus space select bit		"01", "10" [Either CS1 or CS2 is for multiplexed bus and others are for separate bus]		"00" (separate bus)		"11" (Note 1) [Multiplexed bus for the entire space]
Data bus width BYTE pin level		8 bits = "H"	16 bits = "L"	8 bits = "H"	16 bits = "L"	8 bits = "H"
$P0_0$ to $P0_7$	I/O port	Data bus	Data bus	Data bus	Data bus	I/O port
$P1_0$ to $P1_7$	I/O port	I/O port	Data bus	I/O port	Data bus	I/O port
$P2_0$	I/O port	Address bus /data bus(Note 3)	Address bus	Address bus	Address bus	Address bus /data bus
$P2_1$ to $P2_7$	I/O port	Address bus	Address bus /data bus(Note 3)	Address bus /data bus(Note 3)	Address bus	Address bus /data bus
$P3_0$	I/O port	Address bus /data bus(Note 3)	Address bus	Address bus	Address bus	A_8/D_7
$P3_1$ to $P3_7$	I/O port	Address bus	Address bus	Address bus	Address bus	I/O port
$P4_0$ to $P4_3$ Port $P4_0$ to $P4_3$ function select bit = 1	I/O port	I/O port	I/O port	/O port	I/O port	I/O port
$P4_0$ to $P4_3$ Port $P4_0$ to $P4_3$ function select bit = 0	I/O port	Address bus	Address bus	Address bus	Address bus	I/O port
$P4_4$ to $P4_7$	I/O port	$\overline{CS}$ (chip select) or programmable I/O port (For details, refer to "2.4.4 Bus control")				
$P5_0$ to $P5_3$	I/O port	Outputs $\overline{RD}$, $\overline{WRL}$, $\overline{WRH}$, and BCLK or $\overline{RD}$, $\overline{BHE}$, $\overline{WR}$, and BCLK (For details, refer to "2.4.4 Bus control")				
$P5_4$	I/O port	$\overline{HLDA}$	$\overline{HLDA}$	$\overline{HLDA}$	$\overline{HLDA}$	$\overline{HLDA}$
$P5_5$	I/O port	$\overline{HOLD}$	$\overline{HOLD}$	$\overline{HOLD}$	$\overline{HOLD}$	$\overline{HOLD}$
$P5_6$	I/O port	ALE	ALE	ALE	ALE	ALE
$P5_7$	I/O port	$\overline{RDY}$	$\overline{RDY}$	$\overline{RDY}$	$\overline{RDY}$	$\overline{RDY}$

Notes 1: In memory expansion mode, select a 8-bit multiplex bus.
The processor operates using the separate bus after reset is revoked, so the entire space multiplexed bus cannot be chosen in microprocessor mode.
The higher-order address becomes a port if the entire space multiplexed bus is chosen, so only 256 bytes can be used in each chip select.
2: Address bus when in separate bus mode.

2.4.4 Bus Control

The following explains the signals required for accessing external devices and software waits. The signals required for accessing the external devices are valid when the processor mode is set to memory expansion mode and microprocessor mode. The software waits are valid in all processor modes.

(1) Address bus/data bus

The address bus consists of the 20 pins A_0 to A_{19} for accessing the 1M bytes of address space.

The data bus consists of the pins for data I/O. When the BYTE pin is “H”, the 8 ports D_0 to D_7 function as the data bus. When BYTE is “L”, the 16 ports D_0 to D_{15} function as the data bus.

When a change is made from single-chip mode to memory expansion mode, the value of the address bus is undefined until external memory is accessed.

(2) Chip select signal

The chip select signal is output using the same pins as $P4_4$ to $P4_7$. Bits 0 to 3 of the chip select control register (address 0008_{16}) set each pin to function as a port or to output the chip select signal. The chip select control register is valid in memory expansion mode and microprocessor mode. In single-chip mode, $P4_4$ to $P4_7$ function as programmable I/O ports regardless of the value in the chip select control register.

In microprocessor mode, only $\overline{CS0}$ outputs the chip select signal after the reset state has been cancelled. $\overline{CS1}$ to $\overline{CS3}$ function as input ports. Figure 2.4.4 shows the chip select control register.

The chip select signal can be used to split the external area into as many as four blocks. Table 2.4.4 shows the external memory areas specified using the chip select signal.

Table 2.4.3 External areas specified by the chip select signals

Chip select	Specified address range	
	Memory expansion mode	Microprocessor mode
$\overline{CS0}$	30000_{16} to $8FFFF_{16}$ (384K)	30000_{16} to $8FFFF_{16}$ (384K), $B0000_{16}$ to $FFFFF_{16}$ (320K)
$\overline{CS1}$	28000_{16} to $2FFFF_{16}$ (32K)	28000_{16} to $2FFFF_{16}$ (32K)
$\overline{CS2}$	08000_{16} to $27FFF_{16}$ (128K)	08000_{16} to $27FFF_{16}$ (128K)
$\overline{CS3}$	04000_{16} to $07FFF_{16}$ (16K)	04000_{16} to $07FFF_{16}$ (16K)

Chip select control register

b7	b6	b5	b4	b3	b2	b1	b0

Symbol	Address	When reset
CSR	0008_{16}	01_{16}

Bit symbol	Bit name	Function	R	W
CS0	$\overline{CS0}$ output enable bit	0 : Chip select output disabled (Normal port pin) 1 : Chip select output enabled	○	○
CS1	$\overline{CS1}$ output enable bit		○	○
CS2	$\overline{CS2}$ output enable bit		○	○
CS3	$\overline{CS3}$ output enable bit		○	○
CS0W	$\overline{CS0}$ wait bit	0 : Wait state inserted 1 : No wait state	○	○
CS1W	$\overline{CS1}$ wait bit		○	○
CS2W	$\overline{CS2}$ wait bit		○	○
CS3W	$\overline{CS3}$ wait bit		○	○

Figure 2.4.4 Chip select control register

(3) Read/write signals

With a 16-bit data bus (BYTE pin =“L”), bit 2 of the processor mode register 0 (address 0004_{16}) select the combinations of $\overline{RD}$, $\overline{BHE}$, and $\overline{WR}$ signals or $\overline{RD}$, $\overline{WRL}$, and $\overline{WRH}$ signals. With an 8-bit data bus (BYTE pin = “H”), use the combination of $\overline{RD}$, $\overline{WR}$, and $\overline{BHE}$ signals. (Set bit 2 of the processor mode register 0 (address 0004_{16}) to “0”.) Tables 2.4.4 and 2.4.5 show the operation of these signals.

After a reset has been cancelled, the combination of $\overline{RD}$, $\overline{WR}$, and $\overline{BHE}$ signals is automatically selected.

When switching to the $\overline{RD}$, $\overline{WRL}$, and $\overline{WRH}$ combination, do not write to external memory until bit 2 of the processor mode register 0 (address 0004_{16}) has been set (Note).

Note: **Before attempting to change the contents of the processor mode register 0, set bit 1 of the protect register (address $000A_{16}$) to “1”.**

Table 2.4.4 Operation of $\overline{RD}$, $\overline{WRL}$, and $\overline{WRH}$ signals

Data bus width	$\overline{RD}$	$\overline{WRL}$	$\overline{WRH}$	Status of external data bus
16-bit (BYTE = “L”)	L	H	H	Read data
	H	L	H	Write 1 byte of data to even address
	H	H	L	Write 1 byte of data to odd address
	H	L	L	Write data to both even and odd addresses

Table 2.4.5 Operation of $\overline{RD}$, $\overline{WR}$, and $\overline{BHE}$ signals

Data bus width	$\overline{RD}$	$\overline{WR}$	$\overline{BHE}$	A0	Status of external data bus
16-bit (BYTE = “L”)	H	L	L	H	Write 1 byte of data to odd address
	L	H	L	H	Read 1 byte of data from odd address
	H	L	H	L	Write 1 byte of data to even address
	L	H	H	L	Read 1 byte of data from even address
	H	L	L	L	Write data to both even and odd addresses
	L	H	L	L	Read data from both even and odd addresses
8-bit (BYTE = “H”)	H	L	Not used	H / L	Write 1 byte of data
	L	H	Not used	H / L	Read 1 byte of data

(4) ALE signal

The ALE signal latches the address when accessing the multiplex bus space. Latch the address when the ALE signal falls.

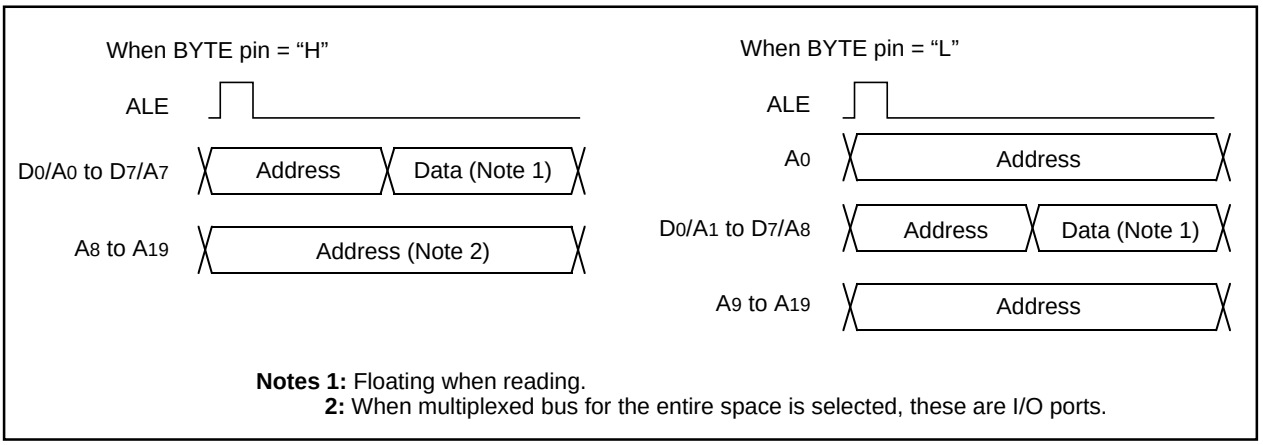

Figure 2.4.5 ALE signal and address/data bus

(5) $\overline{\text{RDY}}$ signal

$\overline{\text{RDY}}$ signal facilitates access of external devices that require a long time for access. As shown in Figure 2.4.6, if an "L" is being input to the $\overline{\text{RDY}}$ pin at the BCLK falling edge, the bus turns to the wait state. If an "H" is being input to the $\overline{\text{RDY}}$ pin at the BCLK falling edge, the bus cancels the wait state. Table 2.4.6 shows the microcomputer state in the wait state. Figure 2.4.6 shows the example of the $\overline{\text{RD}}$ signal being extended using the $\overline{\text{RDY}}$ signal.

The $\overline{\text{RDY}}$ signal is valid when accessing the external area during the bus cycle in which bits 4 to 7 of the chip select control register (address 0008_{16}) are set to "0." The $\overline{\text{RDY}}$ signal is invalid when setting "1" to all bits 4 to 7 of the chip select control register (address 0008_{16}), but the $\overline{\text{RDY}}$ pin should be treated as properly as in non-using.

Table 2.4.6 Microcomputer status in ready state (Note)

Item	Status
Oscillation	On
R/$\overline{\text{W}}$ signal, address bus, data bus, $\overline{\text{CS}}$ ALE signal, $\overline{\text{HLDA}}$, programmable I/O ports	Maintain status when $\overline{\text{RDY}}$ signal received
Internal peripheral circuits	On

Note: The $\overline{\text{RDY}}$ signal cannot be received immediately prior to a software wait.

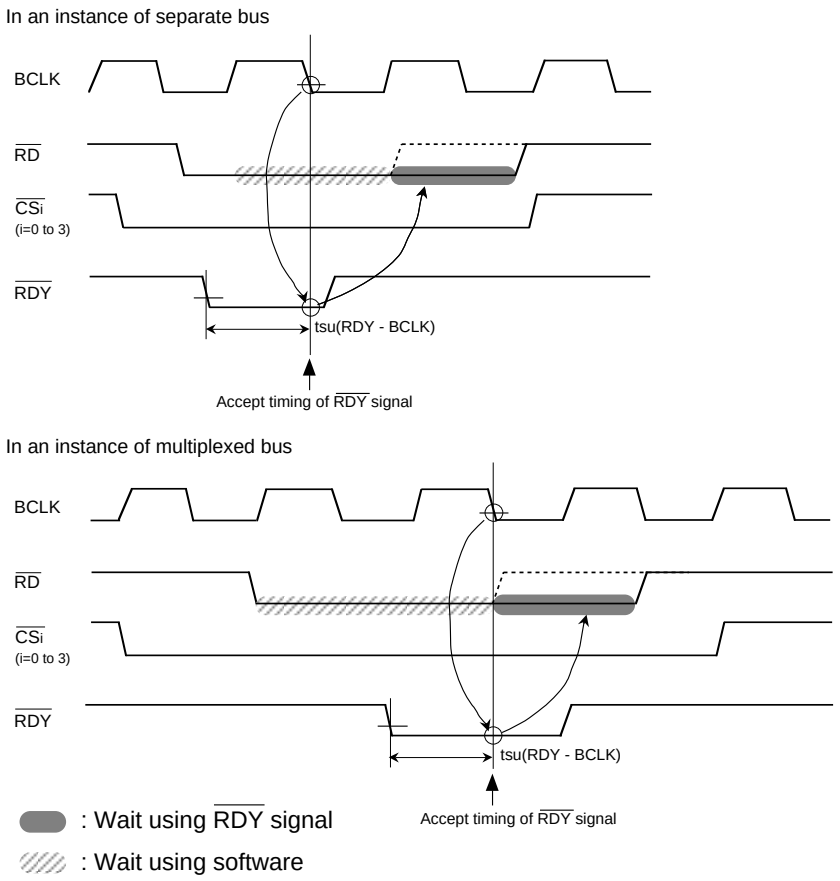

Figure 2.4.6 Example of $\overline{\text{RD}}$ signal extended by $\overline{\text{RDY}}$ signal

(6) Hold signal

The hold signal is used to transfer the bus privileges from the CPU to the external circuits. Inputting “L” to the $\overline{\text{HOLD}}$ pin places the microcomputer in the hold state at the end of the current bus access. This status is maintained and “L” is output from the $\overline{\text{HLDA}}$ pin as long as “L” is input to the $\overline{\text{HOLD}}$ pin. Table 2.4.7 shows the microcomputer status in the hold state.

Bus-using priorities are given to $\overline{\text{HOLD}}$, DMAC, and CPU in order of decreasing precedence.

$\overline{\text{HOLD}}$ > DMAC > CPU

Figure 2.4.7 Bus-using priorities

Table 2.4.7 Microcomputer status in hold state

Item		Status
Oscillation		ON
R/$\overline{\text{W}}$ signal, address bus, data bus, $\overline{\text{CS}}$, $\overline{\text{BHE}}$		Floating
Programmable I/O ports	P0, P1, P2, P3, P4, P5 P6, P7, P8, P9, P10	Floating Maintains status when hold signal is received
$\overline{\text{HLDA}}$		Output “L”
Internal peripheral circuits		ON (but watchdog timer stops)
ALE signal		Undefined

(7) External bus status when internal area is accessed

Table 2.4.8 shows the external bus status when the internal area is accessed.

Table 2.4.8 External bus status when the internal area is accessed

Item		SFR accessed	Internal ROM/RAM accessed
Address bus		Address output	Maintain status before accessed address of external area
Data bus	When read	Floating	Floating
	When write	Output data	Undefined
$\overline{\text{RD}}$, $\overline{\text{WR}}$, $\overline{\text{WRL}}$, $\overline{\text{WRH}}$		$\overline{\text{RD}}$, $\overline{\text{WR}}$, $\overline{\text{WRL}}$, $\overline{\text{WRH}}$ output	Output "H"
$\overline{\text{BHE}}$		$\overline{\text{BHE}}$ output	Maintain status before accessed status of external area
$\overline{\text{CS}}$		Output "H"	Output "H"
ALE		Output "L"	Output "L"

(8) BCLK output

The output of the internal clock ϕ can be selected using bit 7 of the processor mode register 0 (address 0004_{16}) (Note). The output is floating when bit 7 is set to “1”.

Note: Before attempting to change the contents of the processor mode register 0, set bit 1 of the protect register (address 000A16) to “1”.

(9) Software wait

A software wait can be inserted by setting the wait bit (bit 7) of the processor mode register 1 (address 0005_{16}) (Note) and bits 4 to 7 of the chip select control register (address 0008_{16}).

A software wait is inserted in the internal ROM/RAM area and in the external memory area by setting the wait bit of the processor mode register 1. When set to “0”, each bus cycle is executed in one BCLK cycle. When set to “1”, each bus cycle is executed in two or three BCLK cycles. After the microcomputer has been reset, this bit defaults to “0”. When set to “1”, a wait is applied to all memory areas (two or three BCLK cycles), regardless of the contents of bits 4 to 7 of the chip select control register. Set this bit after referring to the recommended operating conditions (main clock input oscillation frequency) of the electric characteristics. However, when the user is using the $\overline{RDY}$ signal, the relevant bit in the chip select control register’s bits 4 to 7 must be set to “0.”

When the wait bit of the processor mode register 1 is “0”, software waits can be set independently for each of the 4 areas selected using the chip select signal. Bits 4 to 7 of the chip select control register correspond to chip selects $\overline{CS0}$ to $\overline{CS3}$. When one of these bits is set to “1”, the bus cycle is executed in one BCLK cycle. When set to “0”, the bus cycle is executed in two or three BCLK cycles. These bits default to “0” after the microcomputer has been reset. These bits default to “0” after the microcomputer has been reset.

The SFR area and the OSD RAM area are always accessed in two BCLK cycles regardless of the setting of these control bits. Also, the corresponding bits of the chip select control register must be set to “0” if using the multiplex bus to access the external memory area.

Table 2.4.9 shows the software wait and bus cycles. Figure 2.4.8 shows example bus timing when using software waits.

Note: Before attempting to change the contents of the processor mode register 1, set bit 1 of the protect register (address $000A_{16}$) to “1”.

Table 2.4.9 Software waits and bus cycles

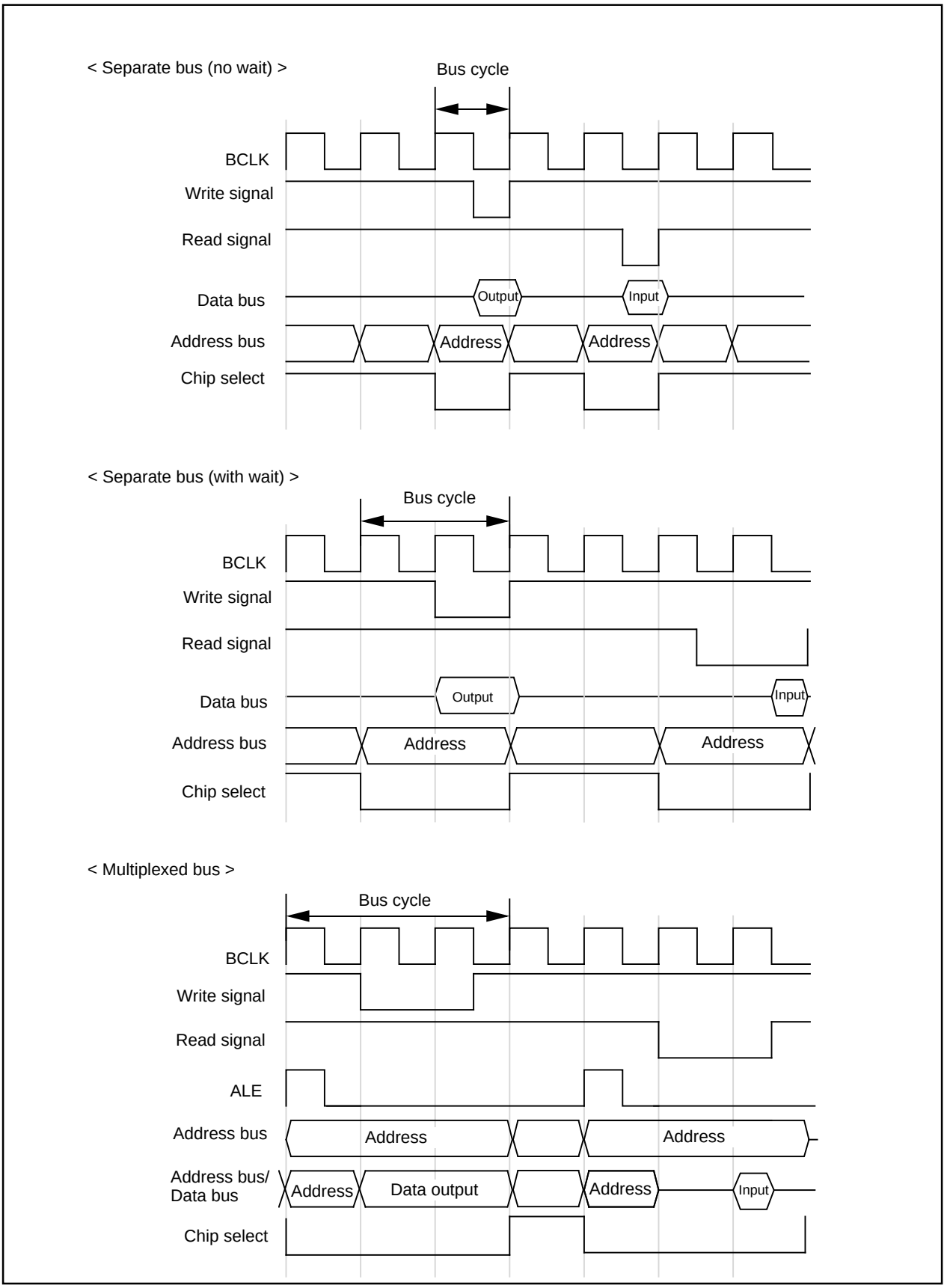

Figure 2.4.8 Typical bus timings using software wait

2.5 Clock Generating Circuit

The clock generating circuit contains 2 oscillator circuits that supply the operating clock sources to the CPU and internal peripheral units and 1 oscillator circuit that supplies the operating clock source to OSD.

Table 2.5.1. Clock oscillation circuits

	Main clock oscillation circuit	Sub-clock oscillation circuit	OSD oscillation circuit
Use of clock	• CPU's operating clock source • Internal peripheral units' operating clock source	• CPU's operating clock source • Timer A/B's count clock source	• OSD's operating clock source
Usable oscillator	•Ceramic resonator (or quartz-crystal oscillator)	•Quartz-crystal oscillator	•Ceramic resonator (or quartz-crystal oscillator) •LC oscillator
Pins to connect oscillator	XIN, XOUT	XIN, XOUT	OSC1, OSC2
Oscillation stop/restart function	Available	Available	
Oscillator status immediately after reset	Oscillating	Stopped	
Other	Externally derived clock can be input		

2.5.1 Example of Oscillator Circuit

Figure 2.5.1 shows some examples of the main clock circuit, one using an oscillator connected to the circuit, and the other one using an externally derived clock for input. Figure 2.5.2 shows some examples of sub-clock circuits, one using an oscillator connected to the circuit, and the other one using an externally derived clock for input. Circuit constants in Figures 2.5.1 and 2.5.2 vary with each oscillator used. Use the values recommended by the manufacturer of your oscillator.

Note: Insert a damping resistor if required. The resistance will vary depending on the oscillator and the oscillation drive capacity setting. Use the value recommended by the maker of the oscillator.
When the oscillation drive capacity is set to low, check that oscillation is stable. When being specified to connect a feedback resistor externally by the manufacture, connect a feedback resistor between pins XIN and XOUT.

Figure 2.5.1 Examples of main clock

Note: Insert a damping resistor if required. The resistance will vary depending on the oscillator and the oscillation drive capacity setting. Use the value recommended by the maker of the oscillator.
When the oscillation drive capacity is set to low, check that oscillation is stable. When being specified to connect a feedback resistor externally by the manufacture, connect a feedback resistor between pins XCIN and XCOUT.

Figure 2.5.2 Examples of sub-clock

2.5.2 OSD Oscillation Circuit

The OSD clock oscillation circuit can obtain simply a clock for OSD by connecting an LC oscillator or a ceramic resonator (or a quartz-crystal oscillator) across the pins OSC1 and OSC2. Which of LC oscillator or a ceramic resonator (or a quartz-crystal oscillator) is selected by setting bits 1 and 2 of the clock control register (address 0205_{16}).

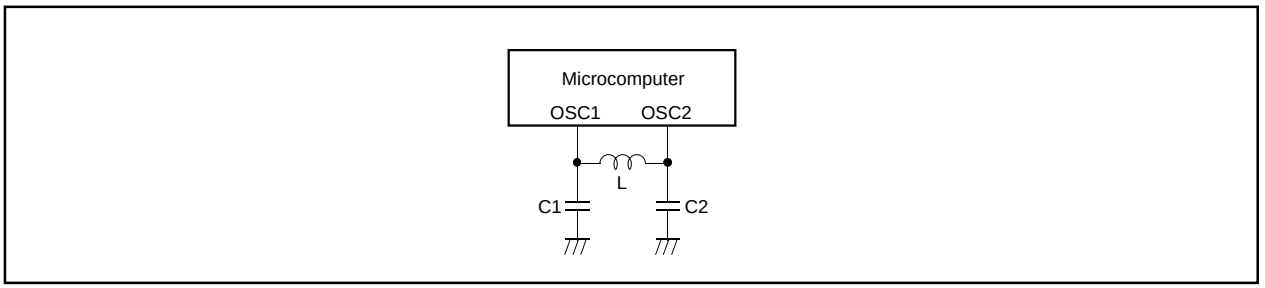

Figure 2.5.3 OSD clock connection example

2.5.3 Clock Control

Figure 2.5.4 shows the block diagram of the clock generating circuit.

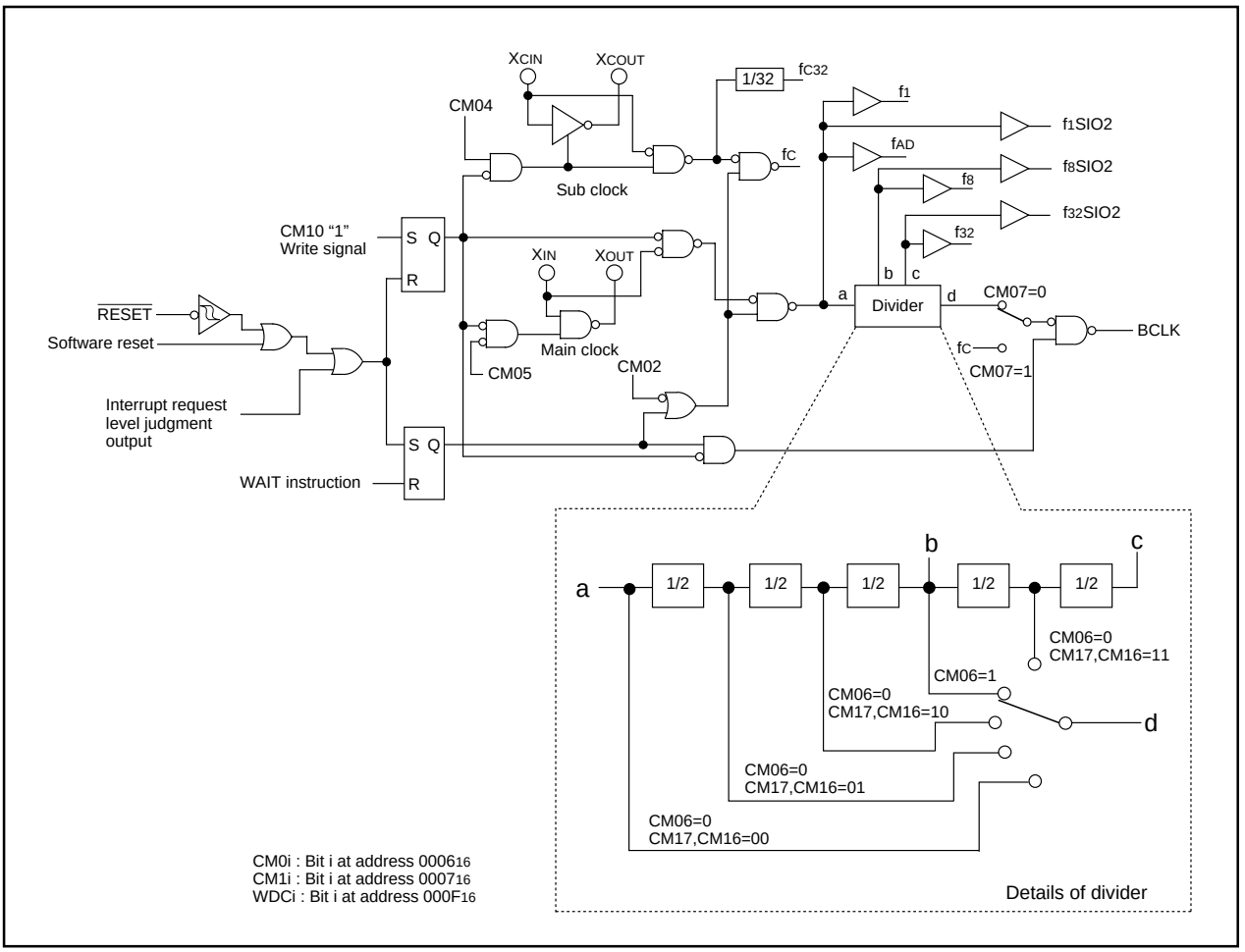

Figure 2.5.4 Clock generating circuit

The following paragraphs describes the clocks generated by the clock generating circuit.

(1) Main clock

The main clock is generated by the main clock oscillation circuit. After a reset, the clock is divided by 8 to the BCLK. The clock can be stopped using the main clock stop bit (bit 5 at address 0006_{16}). Stopping the clock, after switching the operating clock source of CPU to the sub-clock, reduces the power dissipation.

After the oscillation of the main clock oscillation circuit has stabilized, the drive capacity of the main clock oscillation circuit can be reduced using the X_{IN}-X_{OUT} drive capacity select bit (bit 5 at address 0007_{16}). Reducing the drive capacity of the main clock oscillation circuit reduces the power dissipation. This bit changes to “1” when shifting from high-speed/medium-speed mode to stop mode and at a reset. When shifting from low-speed/low power dissipation mode to stop mode, the value before stop mode is retained.

(2) Sub-clock

The sub-clock is generated by the sub clock oscillation circuit. No sub clock is generated after a reset. After oscillation is started using the port Xc select bit (bit 4 at address 0006_{16}), the sub-clock can be selected as the BCLK by using the system clock select bit (bit 7 at address 0006_{16}). However, be sure that the sub-clock oscillation has fully stabilized before switching.

After the oscillation of the sub-clock oscillation circuit has stabilized, the drive capacity of the sub-clock oscillation circuit can be reduced using the X_{CIN}-X_{COUT} drive capacity select bit (bit 3 at address 0006_{16}). Reducing the drive capacity of the sub-clock oscillation circuit reduces the power dissipation. This bit changes to “1” when shifting to stop mode and at a reset.

(3) BCLK

The internal clock ϕ is the clock that drives the CPU, and is fc or the clock derived by dividing the main clock by 1, 2, 4, 8, or 16. The BCLK is derived by dividing the main clock by 8 after a reset. The BCLK signal can be output from pin BCLK by the BCLK output disable bit (bit 7 at address 0004_{16}) in the memory expansion and the microprocessor modes.

The main clock division select bit 0 (bit 6 at address 0006_{16}) changes to “1” when shifting from high-speed/medium-speed to stop mode and at reset. When sifting from low-speed/low power dissipation mode to stop mode, the value before stop mode is retained.

(4) Peripheral function clock (f_1, f_8, f_{32}, f_{1SIO2}, f_{8SIO2}, f_{32SIO2}, f_{AD})

The clock for the peripheral devices is derived by dividing the main clock by 1, 8 or 32. The peripheral function clock is stopped by stopping the main clock or by setting the WAIT peripheral function clock stop bit (bit 2 at 0006_{16}) to “1” and then executing a WAIT instruction.

(5) f_{C32}

This clock is derived by dividing the sub-clock by 32. It is used for the timer A and timer B counts.

(6) f_C

This clock has the same frequency as the sub-clock. It is used for the BCLK and for the watchdog timer.

Figures 2.5.5 and 2.5.6 shows the system clock control registers 0 and 1.

System clock control register 0 (Note 1)

b7	b6	b5	b4	b3	b2	b1	b0

Symbol	Address	When reset
CM0	000_{16}	48_{16}

Bit symbol	Bit name	Function	R	W
CM00	Clock output function select bit (Valid only in single-chip mode)	b1 b0 0 0 : I/O port $P5_7$ 0 1 : f_C output 1 0 : f_8 output 1 1 : f_{32} output	O	O
CM01			O	O
CM02	WAIT peripheral function clock stop bit	0 : Do not stop peripheral function clock in wait mode 1 : Stop peripheral function clock in wait mode (Note 8)	O	O
CM03	X_{CIN}-X_{COUT} drive capacity select bit (Note 2)	0 : LOW 1 : HIGH	O	O
CM04	Port X_C select bit	0 : I/O port 1 : X_{CIN}-X_{COUT} generation	O	O
CM05	Main clock (X_{IN}-X_{OUT}) stop bit (Notes 3, 4, 5)	0 : On 1 : Off	O	O
CM06	Main clock division select bit 0 (Note 7)	0 : CM16 and CM17 valid 1 : Division by 8 mode	O	O
CM07	System clock select bit (Note 6)	0 : X_{IN}, X_{OUT} 1 : X_{CIN}, X_{COUT}	O	O

Notes 1: Set bit 0 of the protect register (address $000A_{16}$) to "1" before writing to this register.
2: Changes to "1" when shifting to stop mode and at a reset.
3: When entering power saving mode, main clock stops using this . When returning from stop mode and operating with X_{IN}, set this bit to "0." When main clock oscillation is operating by itself, set system clock select bit (CM07) to "1" before setting this bit to "1".
4: When inputting external clock, only clock oscillation buffer is stopped and clock input is acceptable.
5: If this bit is set to "1," X_{OUT} turns "H." The built-in feedback resistor remains being connected, so X_{IN} turns pulled up to X_{OUT} ("H") via the feedback resistor.
6: Set port X_C select bit (CM04) to "1" and stabilize the sub-clock oscillating before setting to this bit from "0" to "1." Do not write to both bits at the same time. And also, set the main clock stop bit (CM05) to "0" and stabilize the main clock oscillating before setting this bit from "1" to "0."
7: This bit changes to "1" when shifting from high-speed/medium-speed mode to stop mode and at a reset. When shifting from low-speed/low power dissipation mode to stop mode, the value before stop mode is retained.
8: f_{C32} is not included.

Figures 2.5.5 System clock control register 0

System clock control register 1 (Note 1)

b7	b6	b5	b4	b3	b2	b1	b0
			0	0	0	0	

Symbol	Address	When reset
CM1	0007_{16}	20_{16}

Bit symbol	Bit name	Function	R	W
CM10	All clock stop control bit (Note 4)	0 : Clock on 1 : All clocks off (stop mode)	O	O
Reserved bits		Must always be set to "0"	O	O
CM15	X_{IN}-X_{OUT} drive capacity select bit (Note 2)	0 : LOW 1 : HIGH	O	O
CM16	Main clock division select bit 1 (Note 3)	b7 b6 0 0 : No division mode 0 1 : Division by 2 mode 1 0 : Division by 4 mode 1 1 : Division by 16 mode	O	O
CM17				

Notes 1: Set bit 0 of the protect register (address $000A_{16}$) to "1" before writing to this register.
2: This bit changes to "1" when shifting from high-speed/medium-speed mode to stop mode and at a reset. When shifting from low-speed/low power dissipation mode to stop mode, the value before stop mode is retained.
3: Can be selected when bit 6 of the system clock control register 0 (address 0006_{16}) is "0." If "1", division mode is fixed at 8.
4: If this bit is set to "1," X_{OUT} turns "H," and the built-in feedback resistor is cut off. X_{CIN} and X_{COUT} turn high-impedance state.

Figure 2.5.6 System clock control register 1

2.5.4 Clock Output

In single-chip mode, the clock output function select bits (bits 0 and 1 at address 0006_{16}) enable f_8, f_{32}, or fc to be output from the $P5_7$/CLK_{OUT} pin. When the WAIT peripheral function clock stop bit (bit 2 at address 0006_{16}) is set to "1," the output of f_8 and f_{32} stops when a WAIT instruction is executed.

2.5.5 Stop Mode

Writing "1" to the all-clock stop control bit (bit 0 at address 0007_{16}) stops all oscillation and the microcomputer enters stop mode. In stop mode, the content of the internal RAM is retained provided that V_{CC} remains above 4.5V.

Because the oscillation, BCLK, f_1 to f_{32}, f_{1SIO2} to f_{32SIO2}, f_C, f_{C32}, and f_{AD} stops in stop mode, peripheral functions such as the A-D converter and watchdog timer do not function. However, timer B operates provided that the event counter mode is set to an external pulse, and UARTi (i = 0, 2) functions provided an external clock is selected. Table 2.5.2 shows the status of the ports in stop mode.

Stop mode is cancelled by a hardware reset or an interrupt. If an interrupt is to be used to cancel stop mode, that interrupt must first have been enabled. If returning by an interrupt, that interrupt routine is executed.

When shifting from high-speed/medium-speed mode to stop mode and at a reset, the main clock division select bit 0 (bit 6 at address 0006_{16}) is set to "1." When shifting from low-speed/low power dissipation mode to stop mode, the value before stop mode is retained.

Table 2.5.2 Port status during stop mode

Pin		Memory expansion mode Microprocessor mode	Single-chip mode
Address bus, data bus, $\overline{CS0}$ to $\overline{CS3}$		Retains status before stop mode	
$\overline{RD}$, $\overline{WR}$, $\overline{BHE}$, $\overline{WRL}$, $\overline{WRH}$		"H"	
$\overline{HLDA}$, BCLK		"H"	
ALE		"H"	
Port		Retains status before stop mode	Retains status before stop mode
CLK_{OUT}	When fc selected	Valid only in single-chip mode	"H"
	When f_8, f_{32} selected	Valid only in single-chip mode	Retains status before stop mode

2.5.6 Wait Mode

When a WAIT instruction is executed, the BCLK stops and the microcomputer enters the wait mode. In this mode, oscillation continues but the BCLK and watchdog timer stop. Writing “1” to the WAIT peripheral function clock stop bit and executing a WAIT instruction stops the clock being supplied to the internal peripheral functions, allowing power dissipation to be reduced. Table 2.5.3 shows the status of the ports in wait mode.

Wait mode is cancelled by a hardware reset or an interrupt. If an interrupt is used to cancel wait mode, the microcomputer restarts from the interrupt routine using as BCLK, the clock that had been selected when the WAIT instruction was executed.

Table 2.5.3 Port status during wait mode

Pin		Memory expansion mode Microprocessor mode	Single-chip mode
Address bus, data bus, $\overline{CS0}$ to $\overline{CS3}$		Retains status before wait mode	
$\overline{RD}$, $\overline{WR}$, $\overline{BHE}$, $\overline{WRL}$, $\overline{WRH}$		“H”	
$\overline{HLDA}$,BCLK		“H”	
ALE		“H”	
Port		Retains status before wait mode	Retains status before wait mode
CLKOUT	When f_C selected	Valid only in single-chip mode	Does not stop
	When f_8, f_{32} selected	Valid only in single-chip mode	Does not stop when the WAIT peripheral function clock stop bit is “0”. When the WAIT peripheral function clock stop bit is “1”, the status immediately prior to entering wait mode is maintained.

2.5.7 Status Transition of BCLK

Power dissipation can be reduced and low-voltage operation achieved by changing the count source for BCLK. Table 2.5.4 shows the operating modes corresponding to the settings of system clock control registers 0 and 1.

After a reset, operation defaults to division by 8 mode. When shifting to stop mode, the main clock division select bit 0 (bit 6 at address 0006_{16}) is set to "1". The following shows the operational modes of internal clock ϕ.

(1) Division by 2 mode

The main clock is divided by 2 to obtain the BCLK.

(2) Division by 4 mode

The main clock is divided by 4 to obtain the BCLK.

(3) Division by 8 mode

The main clock is divided by 8 to obtain the BCLK. Note that oscillation of the main clock must have stabilized before transferring from this mode to another mode.

(4) Division by 16 mode

The main clock is divided by 16 to obtain the BCLK.

(5) No-division mode

The main clock is used as the BCLK.

(6) Low-speed mode

fC is used as the BCLK. Note that oscillation of both the main and sub clocks must have stabilized before transferring from this mode to another or vice versa. At least 2 to 3 seconds are required after the sub clock starts. Therefore, the program must be written to wait until this clock has stabilized immediately after powering up and after stop mode is cancelled.

(7) Low power dissipation mode

fC is the BCLK and the main clock is stopped.

Note: When switching the count source for BCLK between XIN and XCIN, it needs that the oscillation of the switched count source is sufficiently stable. Shift after taking the oscillation stabilizing time by software.

Table 2.5.4 Operating modes dictated by settings of system clock control registers 0 and 1

CM17	CM16	CM07	CM06	CM05	CM04	Operating mode of BCLK
0	1	0	0	0	Invalid	Division by 2 mode
1	0	0	0	0	Invalid	Division by 4 mode
Invalid	Invalid	0	1	0	Invalid	Division by 8 mode
1	1	0	0	0	Invalid	Division by 16 mode
0	0	0	0	0	Invalid	No-division mode
Invalid	Invalid	1	Invalid	0	1	Low-speed mode
Invalid	Invalid	1	Invalid	1	1	Low power dissipation mode

2.5.8 Power Control

The following is a description of the three available power control modes:

Modes

Power control is available in three modes.

(1) Normal operation mode

■ **High-speed mode**

Divide-by-1 frequency of the main clock becomes the BCLK. The CPU operates with the internal clock selected. Each peripheral function operates according to its assigned clock.

■ **Medium-speed mode**

Divide-by-2, divide-by-4, divide-by-8, or divide-by-16 frequency of the main clock becomes the BCLK. The CPU operates according to the internal clock selected. Each peripheral function operates according to its assigned clock.

■ **Low-speed mode**

fc becomes the BCLK. The CPU operates according to the fc clock. The fc clock is supplied by the secondary clock. Each peripheral function operates according to its assigned clock.

■ **Low power consumption mode**

The main clock operating in low-speed mode is stopped. The CPU operates according to the fc clock. The fc clock is supplied by the secondary clock. The only peripheral functions that operate are those with the sub-clock selected as the count source.

(2) Wait mode

The CPU operation is stopped. The oscillators do not stop.

(3) Stop mode

All oscillators stop. The CPU and all built-in peripheral functions stop. This mode, among the three modes listed here, is the most effective in decreasing power consumption.

Figure 2.5.7 is the state transition diagram of the above modes.

Transition of stop mode, wait mode

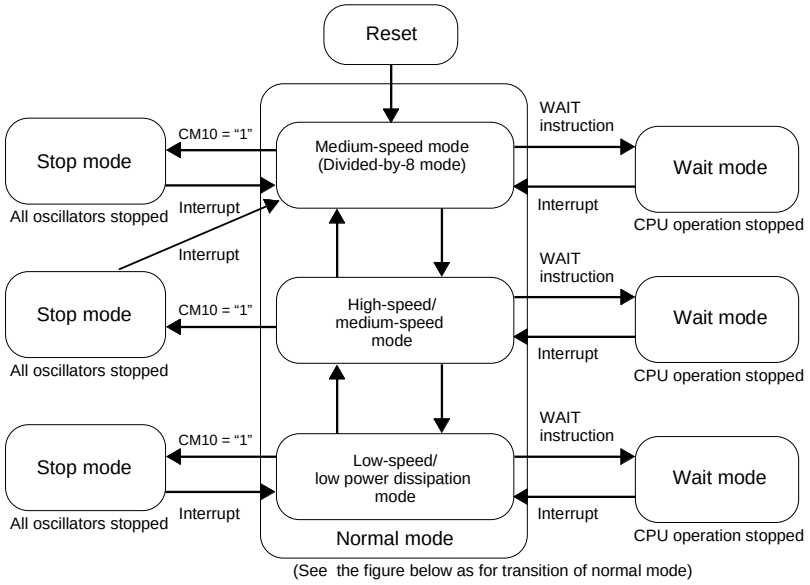

Transition of normal mode

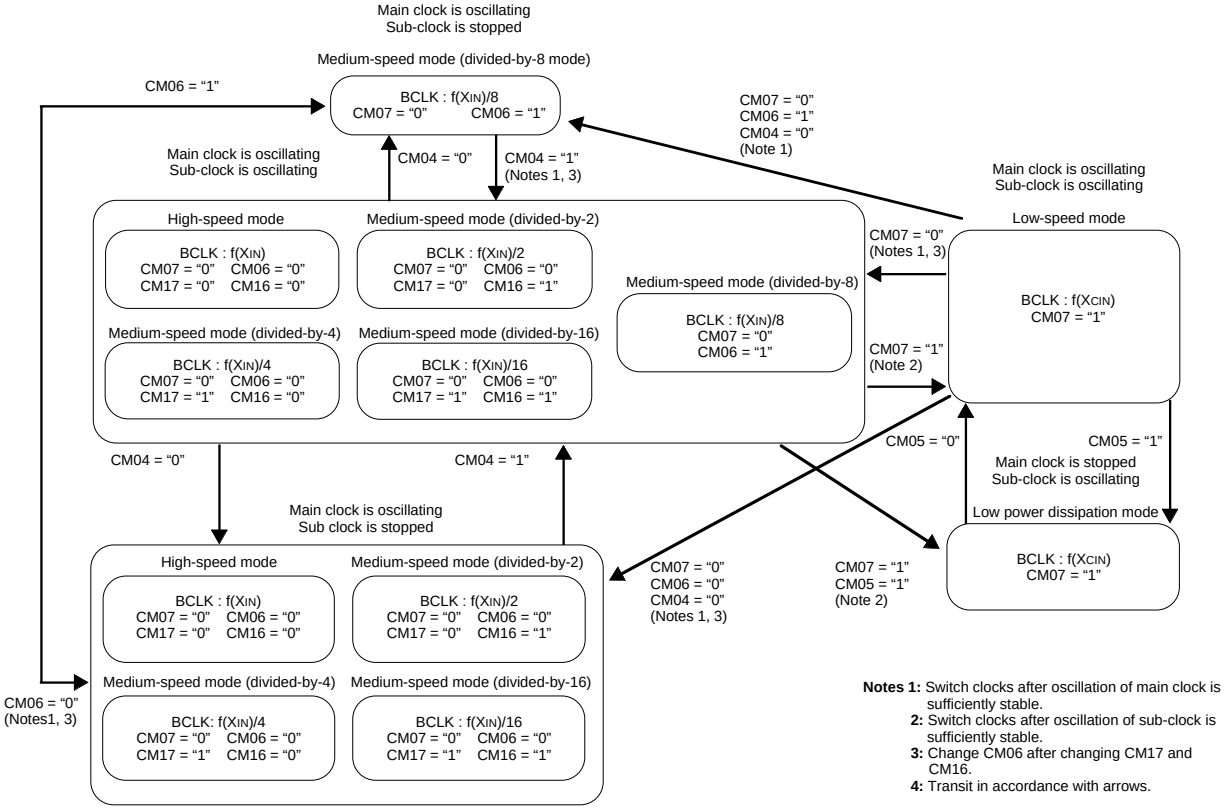

Figure 2.5.7 State transition diagram of Power control mode

2.6 Protection

The protection function is provided so that the values in important registers cannot be changed in the event that the program runs out of control. Figure 2.6.1 shows the protect register. The values in the processor mode register 0 (address 0004_{16}), processor mode register 1 (address 0005_{16}), system clock control register 0 (address 0006_{16}), system clock control register 1 (address 0007_{16}) and port P9 direction register (address $03F3_{16}$) can only be changed when the respective bit in the protect register is set to “1”. Therefore, important outputs can be allocated to port P9.

If, after “1” (write-enabled) has been written to the port P9 direction register write-enable bit (bit 2 at address $000A_{16}$), a value is written to any address, the bit automatically reverts to “0” (write-inhibited). However, the system clock control registers 0 and 1 write-enable bit (bit 0 at $000A_{16}$) and processor mode register 0 and 1 write-enable bit (bit 1 at $000A_{16}$) do not automatically return to “0” after a value has been written to an address. The program must therefore be written to return these bits to “0”.

Protect register

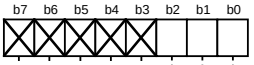

Symbol	Address	When reset
PRCR	$000A_{16}$	$XXXXX000_2$

Bit symbol	Bit name	Function	R	W
PRC0	Enables writing to system clock control registers 0 and 1 (addresses 0006_{16} and 0007_{16})	0 : Write-inhibited 1 : Write-enabled	○	○
PRC1	Enables writing to processor mode registers 0 and 1 (addresses 0004_{16} and 0005_{16})	0 : Write-inhibited 1 : Write-enabled	○	○
PRC2	Enables writing to port P9 direction register (address $03F3_{16}$) (Note)	0 : Write-inhibited 1 : Write-enabled	○	○
Nothing is assigned. In an attempt to write to these bits, write “0.” The value, if read, turns out to be indeterminate.			—	—

Note: Writing a value to an address after “1” is written to this bit returns the bit to “0.” Other bits do not automatically return to “0” and they must therefore be reset by the program.

Figure 2.6.1 Protect register

2.7 Interrupts

2.7.1 Type of Interrupts

Figure 2.7.1 lists the types of interrupts.

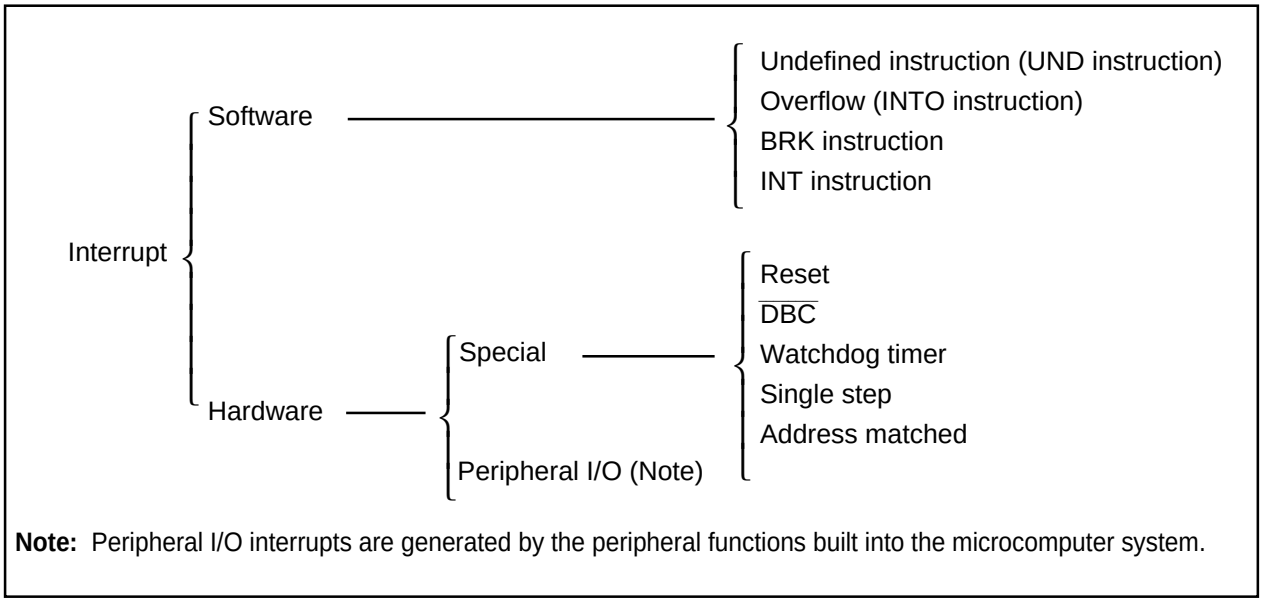

Figure 2.7.1 Classification of interrupts

- Maskable interrupt : An interrupt which can be enabled (disabled) by the interrupt enable flag (I flag) or whose interrupt priority **can be changed** by priority level.
- Non-maskable interrupt : An interrupt which cannot be enabled (disabled) by the interrupt enable flag (I flag) or whose interrupt priority **cannot be changed** by priority level.

2.7.2 Software Interrupts

A software interrupt occurs when executing certain instructions. Software interrupts are non-maskable interrupts.

- **Undefined instruction interrupt**
  An undefined instruction interrupt occurs when executing the UND instruction.
- **Overflow interrupt**
  An overflow interrupt occurs when executing the INTO instruction with the overflow flag (O flag) set to "1". The following are instructions whose O flag changes by arithmetic:
  ABS, ADC, ADCF, ADD, CMP, DIV, DIVU, DIVX, NEG, RMPA, SBB, SHA, SUB
- **BRK interrupt**
  A BRK interrupt occurs when executing the BRK instruction.
- **INT interrupt**
  An INT interrupt occurs when assiging one of software interrupt numbers 0 through 63 and executing the INT instruction. Software interrupt numbers 0 through 31 are assigned to peripheral I/O interrupts, so executing the INT instruction allows executing the same interrupt routine that a peripheral I/O interrupt does.
  The stack pointer (SP) used for the INT interrupt is dependent on which software interrupt number is involved.
  So far as software interrupt numbers 0 through 31 are concerned, the microcomputer saves the stack pointer assignment flag (U flag) when it accepts an interrupt request. If change the U flag to "0" and select the interrupt stack pointer (ISP), and then execute an interrupt sequence. When returning from the interrupt routine, the U flag is returned to the state it was before the acceptance of interrupt request. So far as software numbers 32 through 63 are concerned, the stack pointer does not make a shift.

2.7.3 Hardware Interrupts

Hardware interrupts are classified into two types — special interrupts and peripheral I/O interrupts.

(1) Special interrupts

Special interrupts are non-maskable interrupts.

- **Reset**
  Reset occurs if an “L” is input to the $\overline{\text{RESET}}$ pin.
- **$\overline{\text{DBC}}$ interrupt**
  This interrupt is exclusively for the debugger, do not use it in other circumstances.
- **Watchdog timer interrupt**
  Generated by the watchdog timer.
- **Single-step interrupt**
  This interrupt is exclusively for the debugger, do not use it in other circumstances. With the debug flag (D flag) set to “1,” a single-step interrupt occurs after one instruction is executed.
- **Address match interrupt**
  An address match interrupt occurs immediately before the instruction held in the address indicated by the address match interrupt register is executed with the address match interrupt enable bit set to “1.” If an address other than the first address of the instruction in the address match interrupt register is set, no address match interrupt occurs. For address match interrupt, see 2.11 Address match Interrupt.

(2) Peripheral I/O interrupts

A peripheral I/O interrupt is generated by one of built-in peripheral functions. Built-in peripheral functions are dependent on classes of products, so the interrupt factors too are dependent on classes of products. The interrupt vector table is the same as the one for software interrupt numbers 0 through 31 the INI instruction uses. Peripheral I/O interrupts are maskable interrupts.

- **Bus collision detection interrupt**
  This is an interrupt that the serial I/O bus collision detection generates.
- **DMA0 interrupt, DMA1 interrupt**
  These are interrupts DMA generates.
- **V_{SYNC} interrupt**
  V_{SYNC} interrupt occurs if a V_{SYNC} edge is input.
- **A-D conversion interrupt**
  This is an interrupt that the A-D converter generates.
- **UART0 transmission, UART2 transmission interrupts**
  These are interrupts that the serial I/O transmission generates.
- **UART0 reception, UART2 reception interrupts**
  These are interrupts that the serial I/O reception generates.
- **Multi-master I^2C-BUS interface 0 and multi-master I^2C-BUS interface 1 interrupts**
  This is an interrupt that the serial I/O transmission/reception is completed, or a STOP condition is detected.
- **Timer A0 interrupt through timer A4 interrupt**
  These are interrupts that timer A generates
- **Timer B0 interrupt through timer B2 interrupt**
  These are interrupts that timer B generates.

- **$\overline{\text{INT}}_0$ interrupt and $\overline{\text{INT}}_1$ interrupt**

  An $\overline{\text{INT}}$ interrupt occurs if either a rising edge or a falling edge or a both edge is input to the $\overline{\text{INT}}$ pin.
- **OSD1 interrupt and OSD2 interrupt**

  These are interrupts that OSD display is completed.
- **Data slicer interrupt**

  This is an interrupt that data slicer circuit requests.

2.7.4 Interrupts and Interrupt Vector Tables

If an interrupt request is accepted, a program branches to the interrupt routine set in the interrupt vector table. Set the first address of the interrupt routine in each vector table. Figure 2.7.2 shows the format for specifying the address.

Two types of interrupt vector tables are available — fixed vector table in which addresses are fixed and variable vector table in which addresses can be varied by the setting.

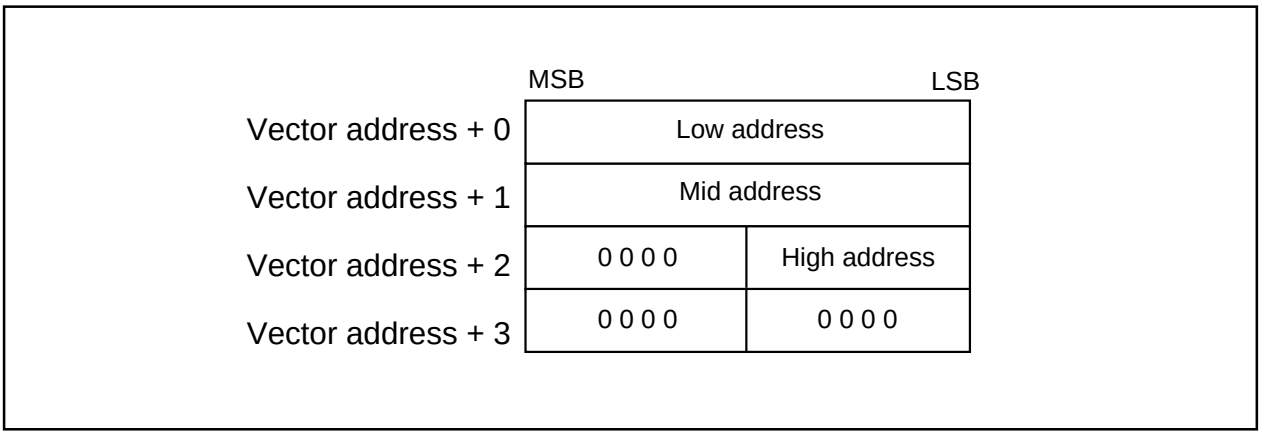

Figure 2.7.2 Format for specifying interrupt vector addresses

(1) Fixed vector tables

The fixed vector table is a table in which addresses are fixed. The vector tables are located in an area extending from FFFDC16 to FFFFF16. One vector table comprises four bytes. Set the first address of interrupt routine in each vector table. Table 2.7.1 shows the interrupts assigned to the fixed vector tables and addresses of vector tables.

Table 2.7.1 Interrupts assigned to the fixed vector tables and addresses of vector tables

Interrupt source	Vector table addresses Address (L) to address (H)	Remarks
Undefined instruction	FFFDC16 to FFFDF16	Interrupt on UND instruction
Overflow	FFFE016 to FFFE316	Interrupt on INTO instruction
BRK instruction	FFFE416 to FFFE716	If the vector is filled with FF16, program execution starts from the address shown by the vector in the variable vector table
Address match	FFFE816 to FFFEB16	There is an address-matching interrupt enable bit
Single step (Note)	FFFEC16 to FFFEF16	Do not use
Watchdog timer	FFFF016 to FFFF316	
$\overline{\text{DBC}}$ (Note)	FFFF416 to FFFF716	Do not use
Reserved source	FFFE816 to FFFEB16	Do not use
Reset	FFFFC16 to FFFFF16	

Note: Interrupts used for debugging purposes only.

(2) Variable vector tables

The fixed vector table is a table in which addresses are fixed. The vector tables are located in an area extending from FFFDC16 to FFFFF16. One vector table comprises four bytes. Set the first address of interrupt routine in each vector table. Table 2.7.2 shows the interrupts assigned to the fixed vector tables and addresses of vector tables.

Table 2.7.2 Interrupts assigned to the variable vector tables and addresses of vector tables

Software interrupt number	Vector table address Address (L) to address (H)	Interrupt source	Remarks
Software interrupt number 0	+0 to +3 (Note)	BRK instruction	Cannot be masked I flag
Software interrupt number 4	+16 to +19 (Note)	OSD1	
Software interrupt number 5	+20 to +23 (Note)	Reserved source	
Software interrupt number 6	+24 to +27 (Note)	Reserved source	
Software interrupt number 7	+28 to +31 (Note)	Reserved source	
Software interrupt number 8	+32 to +35 (Note)	OSD2	
Software interrupt number 9	+36 to +39 (Note)	Multi-master I^2C-BUS interface 1	
Software interrupt number 10	+40 to +43 (Note)	Bus collision detection	
Software interrupt number 11	+44 to +47 (Note)	DMA0	
Software interrupt number 12	+48 to +51 (Note)	DMA1	
Software interrupt number 13	+52 to +55 (Note)	Multi-master I^2C-BUS interface 0	
Software interrupt number 14	+56 to +59 (Note)	A-D conversion	
Software interrupt number 15	+60 to +63 (Note)	UART2 transmit	
Software interrupt number 16	+64 to +67 (Note)	UART2 receive	
Software interrupt number 17	+68 to +71 (Note)	UART0 transmit	
Software interrupt number 18	+72 to +75 (Note)	UART0 receive	
Software interrupt number 19	+76 to +79 (Note)	Data slicer	
Software interrupt number 20	+80 to +83 (Note)	V_{SYNC}	
Software interrupt number 21	+84 to +87 (Note)	Timer A0	
Software interrupt number 22	+88 to +91 (Note)	Timer A1	
Software interrupt number 23	+92 to +95 (Note)	Timer A2	
Software interrupt number 24	+96 to +99 (Note)	Timer A3	
Software interrupt number 25	+100 to +103 (Note)	Timer A4	
Software interrupt number 26	+104 to +107 (Note)	Timer B0	
Software interrupt number 27	+108 to +111 (Note)	Timer B1	
Software interrupt number 28	+112 to +115 (Note)	Timer B2	
Software interrupt number 29	+116 to +119 (Note)	$\overline{INT_0}$	
Software interrupt number 30	+120 to +123 (Note)	$\overline{INT_1}$	
Software interrupt number 31	+124 to +127 (Note)	Reserved source	
Software interrupt number 32 to Software interrupt number 63	+128 to +131 (Note) to +252 to +255 (Note)	Software interrupt	Cannot be masked I flag

Note: Address relative to address in interrupt table register (INTB).

2.7.5 Interrupt Control

Descriptions are given here regarding how to enable or disable maskable interrupts and how to set the priority to be accepted. What is described here does not apply to non-maskable interrupts.

Enable or disable a non-maskable interrupt using the interrupt enable flag (I flag), interrupt priority level selection bit, or processor interrupt priority level (IPL). Whether an interrupt request is present or absent is indicated by the interrupt request bit. The interrupt request bit and the interrupt priority level selection bit are located in the interrupt control register of each interrupt. Also, the interrupt enable flag (I flag) and the IPL are located in the flag register (FLG).

Figure 2.7.3 shows the interrupt control registers.

Interrupt control register

Symbol	Address	When reset
OSDiIC(i = 1, 2)	004_{16}, 0048_{16}	$XXXX?000_2$
BCNIC	$004A_{16}$	$XXXX?000_2$
DMiIC(i = 0, 1)	$004B_{16}$, $004C_{16}$	$XXXX?000_2$
IIC0IC	$004D_{16}$	$XXXX?000_2$
ADIC	$004E_{16}$	$XXXX?000_2$
SiTIC(i = 0 , 2)	0051_{16}, $004F_{16}$	$XXXX?000_2$
SiRIC(i = 0 , 2)	0052_{16}, 0050_{16}	$XXXX?000_2$
DSIC	0053_{16}	$XXXX?000_2$
VSYNCIC	0054_{16}	$XXXX?000_2$
TAiIC(i = 0 to 4)	0055_{16} to 0059_{16}	$XXXX?000_2$
TBiIC(i = 0 to 2)	$005A_{16}$ to $005C_{16}$	$XXXX?000_2$

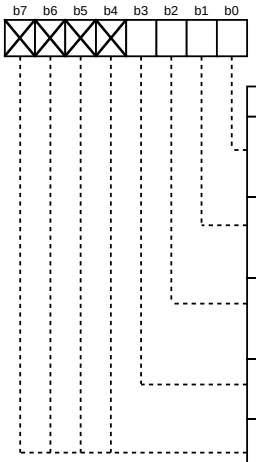

Bit symbol	Bit name	Function	R	W
ILVL0	Interrupt priority level select bit	b2 b1 b0 0 0 0 : Level 0 (interrupt disabled) 0 0 1 : Level 1 0 1 0 : Level 2 0 1 1 : Level 3 1 0 0 : Level 4 1 0 1 : Level 5 1 1 0 : Level 6 1 1 1 : Level 7	○	○
ILVL1			○	○
ILVL2			○	○
IR	Interrupt request bit	0 : Interrupt not requested 1 : Interrupt requested	○	○ (Note)
Nothing is assigned. In an attempt to write to these bits, write “0.” The value, if read, turns out to be indeterminate.			—	—

Notes 1: This bit can only be accessed for reset (= 0), but cannot be accessed for set (= 1).
2: To rewrite the interrupt control register, do so at a point that does not generate the interrupt register for that register. For details, see the precautions for interrupts.

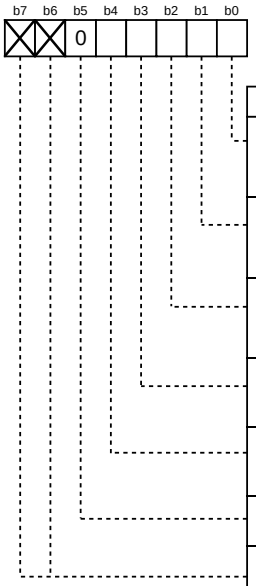

Symbol	Address	When reset
INTiIC(i = 0, 1)	$005D_{16}$, $005E_{16}$	$XX00?000_2$
IIC1IC	0049_{16}	$XX00?000_2$

Bit symbol	Bit name	Function	R	W
ILVL0	Interrupt priority level select bit	b2 b1 b0 0 0 0 : Level 0 (interrupt disabled) 0 0 1 : Level 1 0 1 0 : Level 2 0 1 1 : Level 3 1 0 0 : Level 4 1 0 1 : Level 5 1 1 0 : Level 6 1 1 1 : Level 7	○	○
ILVL1			○	○
ILVL2			○	○
IR	Interrupt request bit	0: Interrupt not requested 1: Interrupt requested	○	○ (Note 1)
POL	Polarity select bit (Note 2)	0 : Selects falling edge 1 : Selects rising edge	○	○
Reserved bit		Must always be set to “0”	○	○
Nothing is assigned. In an attempt to write to these bits, write “0.” The value, if read, turns out to be indeterminate.			—	—

Notes 1: This bit can only be accessed for reset (= 0), but cannot be accessed for set (= 1).
2: Bit 4 at address 0049_{16} is invalid. Must always be set to “0.”
3: To rewrite the interrupt control register, do so at a point that does not generate the interrupt register for that register. For details, see the precautions for interrupts.

Figure 2.7.3 Interrupt control registers

2.7.6 Interrupt Enable Flag (I flag)

The interrupt enable flag (I flag) controls the enabling and disabling of maskable interrupts. Setting this flag to “1” enables all maskable interrupts; setting it to “0” disables all maskable interrupts. This flag is set to “0” after reset.

2.7.7 Interrupt Request Bit

The interrupt request bit is set to "1" by hardware when an interrupt is requested. After the interrupt is accepted and jumps to the corresponding interrupt vector, the request bit is set to "0" by hardware. The interrupt request bit can also be set to "0" by software. (Do not set this bit to "1").

2.7.8 Interrupt Priority Level Select Bit and Processor Interrupt Priority Level (IPL)

Set the interrupt priority level using the interrupt priority level select bit, which is one of the component bits of the interrupt control register. When an interrupt request occurs, the interrupt priority level is compared with the IPL. The interrupt is enabled only when the priority level of the interrupt is higher than the IPL. Therefore, setting the interrupt priority level to “0” disables the interrupt.
Table 2.7.3 shows the settings of interrupt priority levels and Table 2.7.4 shows the interrupt levels enabled, according to the consist of the IPL.

The following are conditions under which an interrupt is accepted:
· interrupt enable flag (I flag) = 1
· interrupt request bit = 1
· interrupt priority level > IPL

The interrupt enable flag (I flag), the interrupt request bit, the interrupt priority select bit, and the IPL are independent, and they are not affected by one another.

Table 2.7.3 Settings of interrupt priority levels

Interrupt priority level select bit (b2 b1 b0)	Interrupt priority level	Priority order
0 0 0	Level 0 (interrupt disabled)	———
0 0 1	Level 1	Low
0 1 0	Level 2	↓
0 1 1	Level 3	
1 0 0	Level 4	
1 0 1	Level 5	
1 1 0	Level 6	
1 1 1	Level 7	High

Table 2.7.4 Interrupt levels enabled according to the contents of the IPL

IPL (IPL_2 IPL_1 IPL_0)	Enabled interrupt priority levels
0 0 0	Interrupt levels 1 and above are enabled
0 0 1	Interrupt levels 2 and above are enabled
0 1 0	Interrupt levels 3 and above are enabled
0 1 1	Interrupt levels 4 and above are enabled
1 0 0	Interrupt levels 5 and above are enabled
1 0 1	Interrupt levels 6 and above are enabled
1 1 0	Interrupt levels 7 and above are enabled
1 1 1	All maskable interrupts are disabled

2.7.9 Rewrite Interrupt Control Register

To rewrite the interrupt control register, do so at a point that does not generate the interrupt request for that register. If there is possibility of the interrupt request occur, rewrite the interrupt control register after the interrupt is disabled. The program examples are described as follow:

Example 1:

```
INT_SWITCH1:
    FCLR    I              ; Disable interrupts.
    AND.B   #00h, 0055h    ; Clear TA0IC int. priority level and int. request bit.
    NOP                    ; Four NOP instructions are required when using HOLD function.
    NOP
    FSET    I              ; Enable interrupts.
```

Example 2:

```
INT_SWITCH2:
    FCLR    I              ; Disable interrupts.
    AND.B   #00h, 0055h    ; Clear TA0IC int. priority level and int. request bit.
    MOV.W   MEM, R0        ; Dummy read.
    FSET    I              ; Enable interrupts.
```

Example 3:

```
INT_SWITCH3:
    PUSHC   FLG            ; Push Flag register onto stack
    FCLR    I              ; Disable interrupts.
    AND.B   #00h, 0055h    ; Clear TA0IC int. priority level and int. request bit.
    POPC    FLG            ; Enable interrupts.
```

The reason why two NOP instructions (four when using the HOLD function) or dummy read are inserted before FSET I in Examples 1 and 2 is to prevent the interrupt enable flag I from being set before the interrupt control register is rewritten due to effects of the instruction queue.

When a instruction to rewrite the interrupt control register is executed but the interrupt is disabled, the interrupt request bit is not set sometimes even if the interrupt request for that register has been generated. This will depend on the instruction. If this creates problems, use the below instructions to change the register.

Instructions : AND, OR, BCLR, BSET

2.7.10 Interrupt Sequence

An interrupt sequence — what are performed over a period from the instant an interrupt is accepted to the instant the interrupt routine is executed — is described here.

If an interrupt occurs during execution of an instruction, the processor determines its priority when the execution of the instruction is completed, and transfers control to the interrupt sequence from the next cycle. If an interrupt occurs during execution of either the SMOVB, SMOVF, SSTR or RMPA instruction, the processor temporarily suspends the instruction being executed, and transfers control to the interrupt sequence.

In the interrupt sequence, the processor carries out the following in sequence given:

(1) CPU gets the interrupt information (the interrupt number and interrupt request level) by reading address 00000_{16}.
(2) Saves the content of the flag register (FLG) as it was immediately before the start of interrupt sequence in the temporary register (Note) within the CPU.
(3) Sets the interrupt enable flag (I flag), the debug flag (D flag), and the stack pointer select flag (U flag) to “0” (the U flag, however does not change if the INT instruction, in software interrupt numbers 32 through 63, is executed)
(4) Saves the content of the temporary register (Note 1) within the CPU in the stack area.
(5) Saves the content of the program counter (PC) in the stack area.
(6) Sets the interrupt priority level of the accepted instruction in the IPL.

After the interrupt sequence is completed, the processor resumes executing instructions from the first address of the interrupt routine.

Note: This register cannot be utilized by the user.

2.7.11 Interrupt Response Time

'Interrupt response time' is the period between the instant an interrupt occurs and the instant the first instruction within the interrupt routine has been executed. This time comprises the period from the occurrence of an interrupt to the completion of the instruction under execution at that moment (a) and the time required for executing the interrupt sequence (b). Figure 2.7.4 shows the interrupt response time.

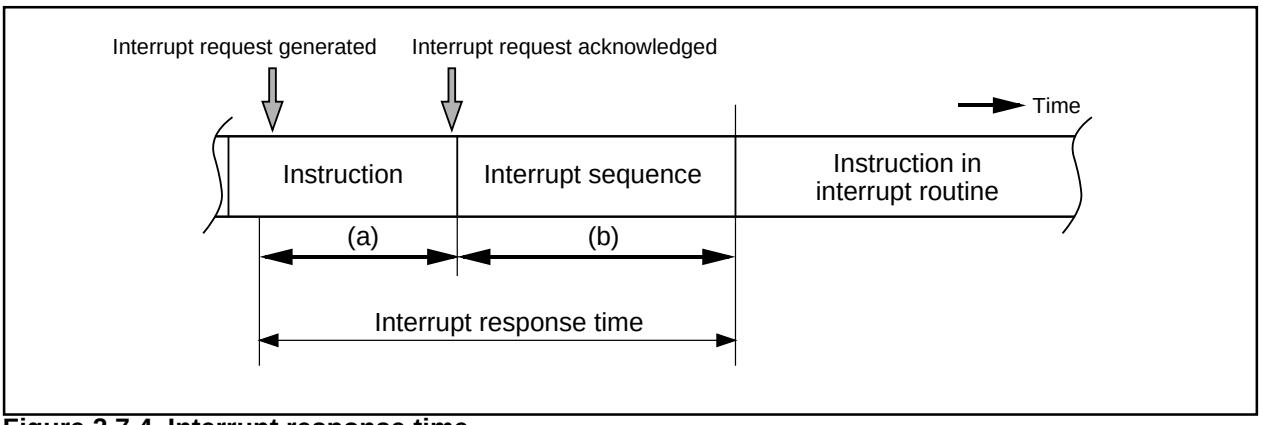

Figure 2.7.4 Interrupt response time

Time (a) is dependent on the instruction under execution. Thirty cycles is the maximum required for the DIVX instruction (without wait).
Time (b) is as shown in Table 2.7.5.

Table 2.7.5 Time required for executing the interrupt sequence

Interrupt vector address	Stack pointer (SP) value	16-Bit bus, without wait	8-Bit bus, without wait
Even	Even	18 cycles (Note 1)	20 cycles (Note 1)
Even	Odd	19 cycles (Note 1)	20 cycles (Note 1)
Odd (Note 2)	Even	19 cycles (Note 1)	20 cycles (Note 1)
Odd (Note 2)	Odd	20 cycles (Note 1)	20 cycles (Note 1)

Notes 1: Add 2 cycles in the case of a $\overline{\text{DBC}}$ interrupt; add 1 cycle in the case either of an address coincidence interrupt or of a single-step interrupt.
2: Locate an interrupt vector address in an even address, if possible.

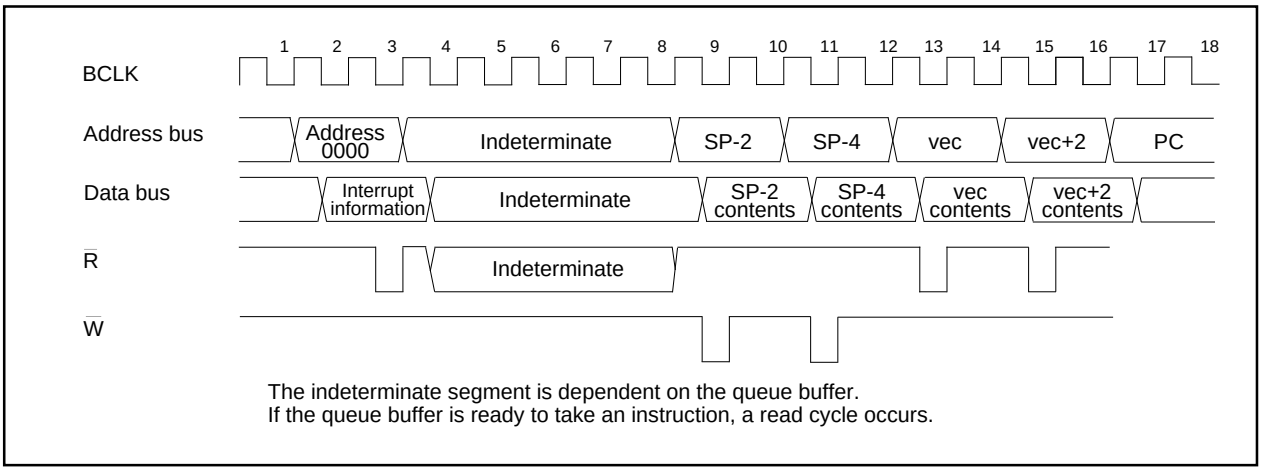

Figure 2.7.5 Time required for executing the interrupt sequence

2.7.12 Variation of IPL when Interrupt Request is Accepted

If an interrupt request is accepted, the interrupt priority level of the accepted interrupt is set in the IPL.
If an interrupt request, that does not have an interrupt priority level, is accepted, one of the values shown in Table 2.7.6 is set in the IPL.

Table 2.7.6 Relationship between interrupts without interrupt priority levels and IPL

Interrupt sources without priority levels	Value set in the IPL
Watchdog timer	7
Reset	0
Other	Not changed

2.7.13 Saving Registers

In the interrupt sequence, only the contents of the flag register (FLG) and that of the program counter (PC) are saved in the stack area.

First, the processor saves the four higher-order bits of the program counter, and 4 upper-order bits and 8 lower-order bits of the FLG register, 16 bits in total, in the stack area, then saves 16 lower-order bits of the program counter. Figure 2.7.6 shows the state of the stack as it was before the acceptance of the interrupt request, and the state the stack after the acceptance of the interrupt request.

Save other necessary registers at the beginning of the interrupt routine using software. Using the PUSHM instruction alone can save all the registers except the stack pointer (SP).

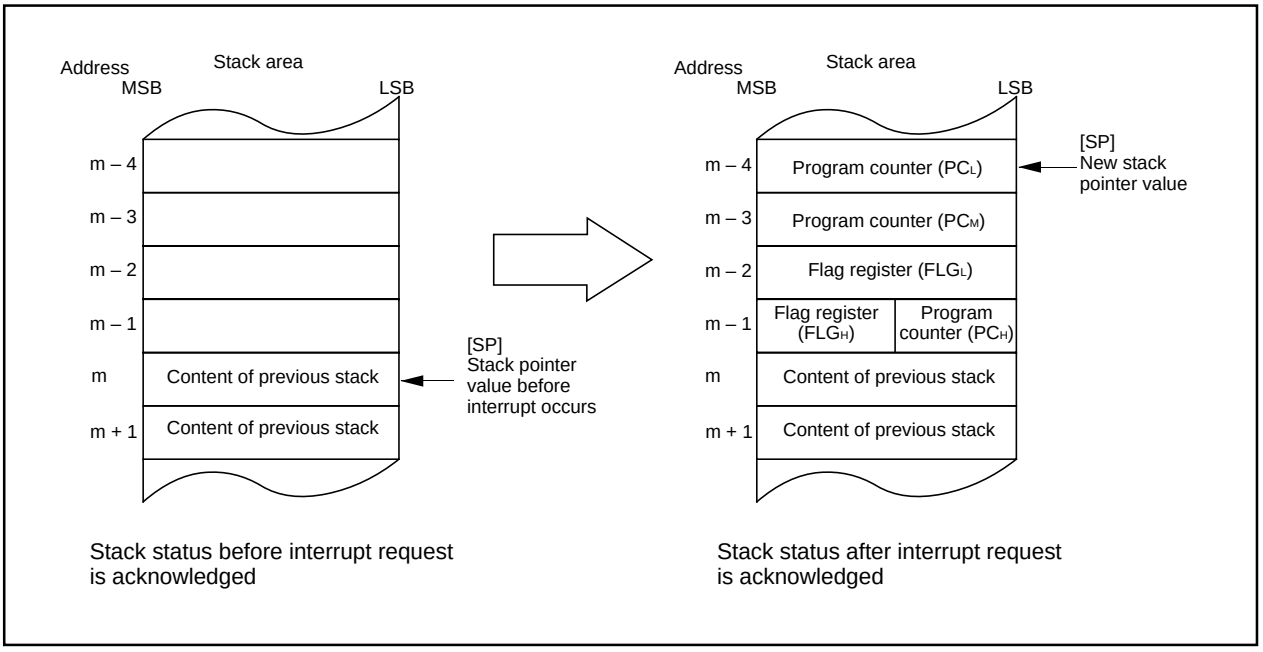

Figure 2.7.6 State of stack before and after acceptance of interrupt request

The operation of saving registers carried out in the interrupt sequence is dependent on whether the content of the stack pointer, at the time of acceptance of an interrupt request, is even or odd. If the content of the stack pointer (Note) is even, the content of the flag register (FLG) and the content of the program counter (PC) are saved, 16 bits at a time. If odd, their contents are saved in two steps, 8 bits at a time. Figure 2.7.7 shows the operation of the saving registers.

Note: Stack pointer indicated by U flag.

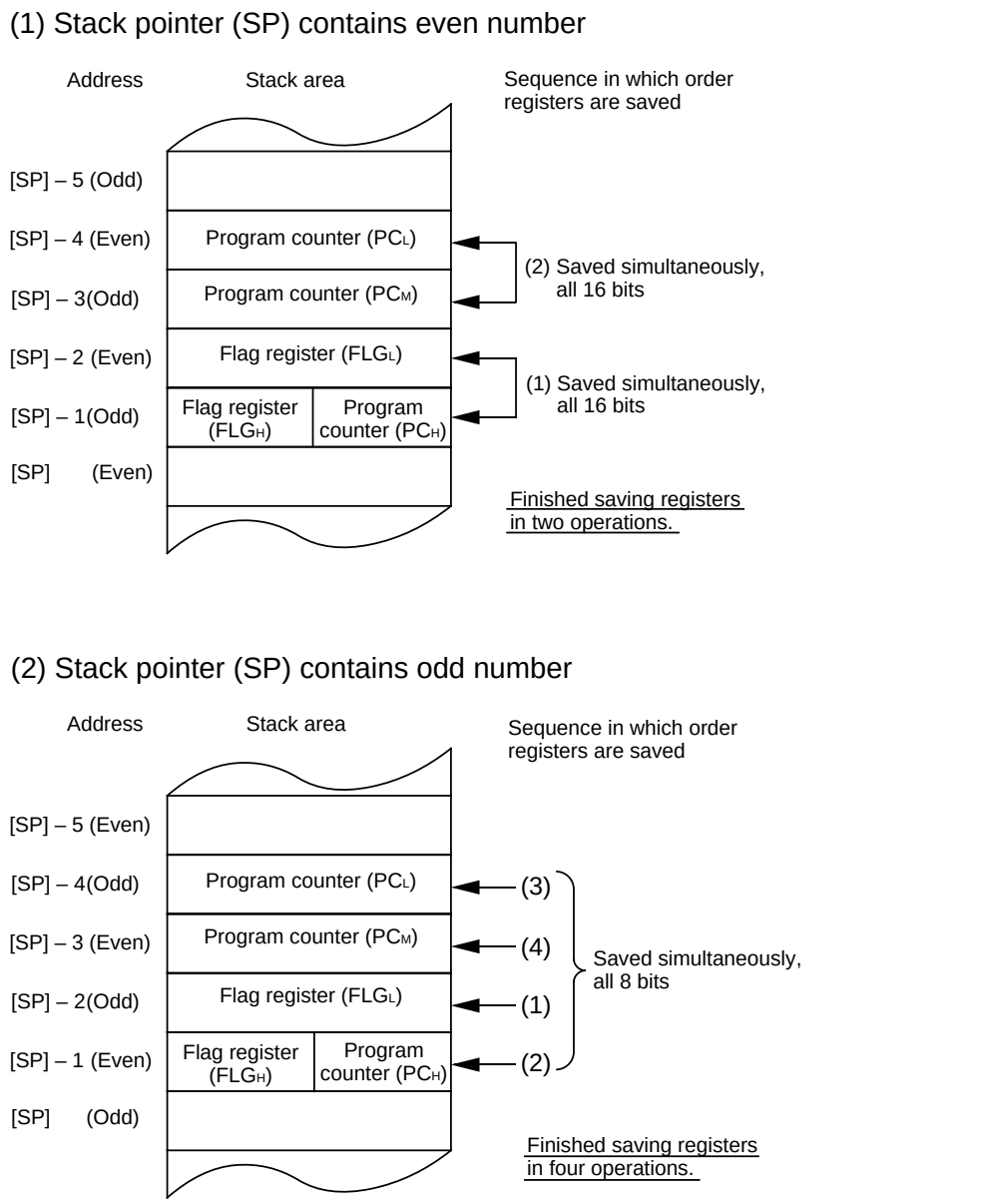

Note: [SP] denotes the initial value of the stack pointer (SP) when interrupt request is acknowledged.
After registers are saved, the SP content is [SP] minus 4.

Figure 2.7.7 Operation of saving registers

2.7.14 Returning from an Interrupt Routine

Executing the REIT instruction at the end of an interrupt routine returns the contents of the flag register (FLG) as it was immediately before the start of interrupt sequence and the contents of the program counter (PC), both of which have been saved in the stack area. Then control returns to the program that was being executed before the acceptance of the interrupt request, so that the suspended process resumes.

Return the other registers saved by software within the interrupt routine using the POPM or similar instruction before executing the REIT instruction.

2.7.15 Interrupt Priority

If there are two or more interrupt requests occurring at a point in time within a single sampling (checking whether interrupt requests are made), the interrupt assigned a higher priority is accepted.

Assign an arbitrary priority to maskable interrupts (peripheral I/O interrupts) using the interrupt priority level select bit. If the same interrupt priority level is assigned, however, the interrupt assigned a higher hardware priority is accepted.

Priorities of the special interrupts, such as Reset (dealt with as an interrupt assigned the highest priority), watchdog timer interrupt, etc. are regulated by hardware.

Figure 2.7.8 shows the priorities of hardware interrupts.

Software interrupts are not affected by the interrupt priority. If an instruction is executed, control branches invariably to the interrupt routine.

2.7.16 Interrupt Priority Level Resolution Circuit

When two or more interrupts are generated simultaneously, this circuit selects the interrupt with the highest priority level.

Figure 2.7.9 shows the circuit that judges the interrupt priority level.

Reset > $\overline{\text{DBC}}$ > Watchdog timer > Peripheral I/O > Single step > Address match

Figure 2.7.8 Hardware interrupts priorities

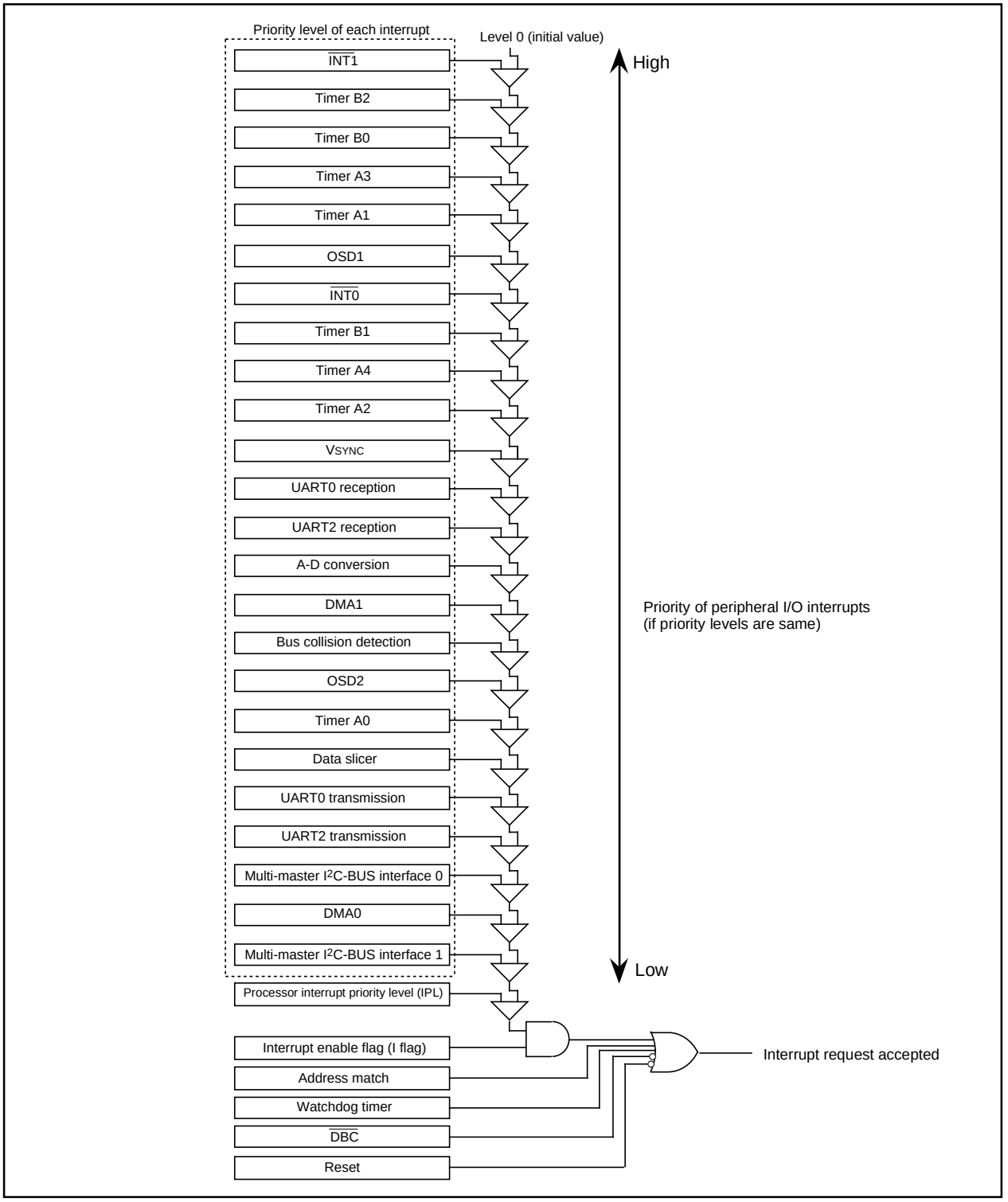

Figure 2.7.9 Maskable interrupts priorities (peripheral I/O interrupts)

2.7.17 $\overline{\text{INT}}$ Interrupt

$\overline{\text{INT}}_0$ and $\overline{\text{INT}}_1$ are triggered by the edges of external inputs. The edge polarity is selected using the polarity select bit.

As for external interrupt input, an interrupt can be generated both at the rising edge and at the falling edge by setting “1” in the INTi interrupt polarity switching bit of the interrupt request cause select register ($035F_{16}$). To select both edges, set the polarity switching bit of the corresponding interrupt control register to ‘falling edge’ (“0”).

Figure 2.7.10 shows the Interrupt control reserved register, Figure 2.7.11 shows the Interrupt request cause select register.

Interrupt control reserved register i

b7	b6	b5	b4	b3	b2	b1	b0
0	0	0	0	0	0	0	0

Symbol	Address	When reset
REiIC (i = 0 to 3)	0045_{16}, 0046_{16}, 0047_{16}, $005F_{16}$	Indeterminate

Bit symbol	Bit name	Function	R	W
Reserved bits		Must always be set to “0”	○	○

Figure 2.7.10 Interrupt control reserved register i (i = 0 to 3)

Interrupt request cause select register

b7	b6	b5	b4	b3	b2	b1	b0
0	0	0	0	0	0		

Symbol	Address	When reset
IFSR	$035F_{16}$	00_{16}

Bit symbol	Bit name	Function	R	W
IFSR0	INT0 interrupt polarity switching bit	0 : One edge 1 : Two edges	○	○
IFSR1	INT1 interrupt polarity switching bit	0 : One edge 1 : Two edges	○	○
Reserved bits		Must always be set to “0”	○	○

Figure 2.7.11 Interrupt request cause select register

2.7.18 Address Match Interrupt

An address match interrupt is generated when the address match interrupt address register contents match the program counter value. Two address match interrupts can be set, each of which can be enabled and disabled by an address match interrupt enable bit. Address match interrupts are not affected by the interrupt enable flag (I flag) and processor interrupt priority level (IPL). The value of the program counter (PC) for an address match interrupt varies depending on the instruction being executed. Figures 2.7.12 and 2.7.13 show the address match interrupt-related registers.

Address match interrupt enable register

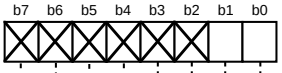

Symbol	Address	When reset
AIER	0009_{16}	$XXXXXX00_{2}$

Bit symbol	Bit name	Function	R	W
AIER0	Address match interrupt 0 enable bit	0 : Interrupt disabled 1 : Interrupt enabled	○	○
AIER1	Address match interrupt 1 enable bit	0 : Interrupt disabled 1 : Interrupt enabled	○	○
Nothing is assigned. In an attempt to write to these bits, write “0”. The value, if read, turns out to be indeterminated.			—	—

Figure 2.7.12 Address match interrupt enable register

Address match interrupt register i (i = 0, 1)

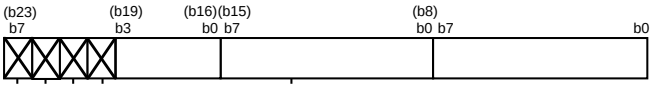

Symbol	Address	When reset
RMAD0	0012_{16} to 0010_{16}	$X00000_{16}$
RMAD1	0016_{16} to 0014_{16}	$X00000_{16}$

Function	Values that can be set	R	W
Address setting register for address match interrupt	00000_{16} to $FFFFF_{16}$	○	○
Nothing is assigned. In an attempt to write to these bits, write “0”. The value, if read, turns out to be indeterminated.		—	—

Figure 2.7.13 Address match interrupt register i (i = 0, 1)

2.7.19 Precautions for Interrupts

(1) Reading address 00000_{16}

• When maskable interrupt is occurred, CPU read the interrupt information (the interrupt number and interrupt request level) in the interrupt sequence.
The interrupt request bit of the certain interrupt written in address 00000_{16} will then be set to “0”.
Reading address 00000_{16} by software sets enabled highest priority interrupt source request bit to “0”.
Though the interrupt is generated, the interrupt routine may not be executed.
Do not read address 00000_{16} by software.

(2) Setting the stack pointer

• The value of the stack pointer immediately after reset is initialized to 0000_{16}. Accepting an interrupt before setting a value in the stack pointer may become a factor of runaway. Be sure to set a value in the stack pointer before accepting an interrupt.

(3) External interrupt

• Either an “L” level or an “H” level of at least 250 ns width is necessary for the signal input to pins $\overline{INT_0}$ and $\overline{INT_1}$ regardless of the CPU operation clock.

•When the polarity of the $\overline{INT_0}$ and $\overline{INT_1}$ pins is changed, the interrupt request bit is sometimes set to “1”. After changing the polarity, set the interrupt request bit to “0”. Figure 2.7.14 shows the procedure for changing the $\overline{INT}$ interrupt generate factor.

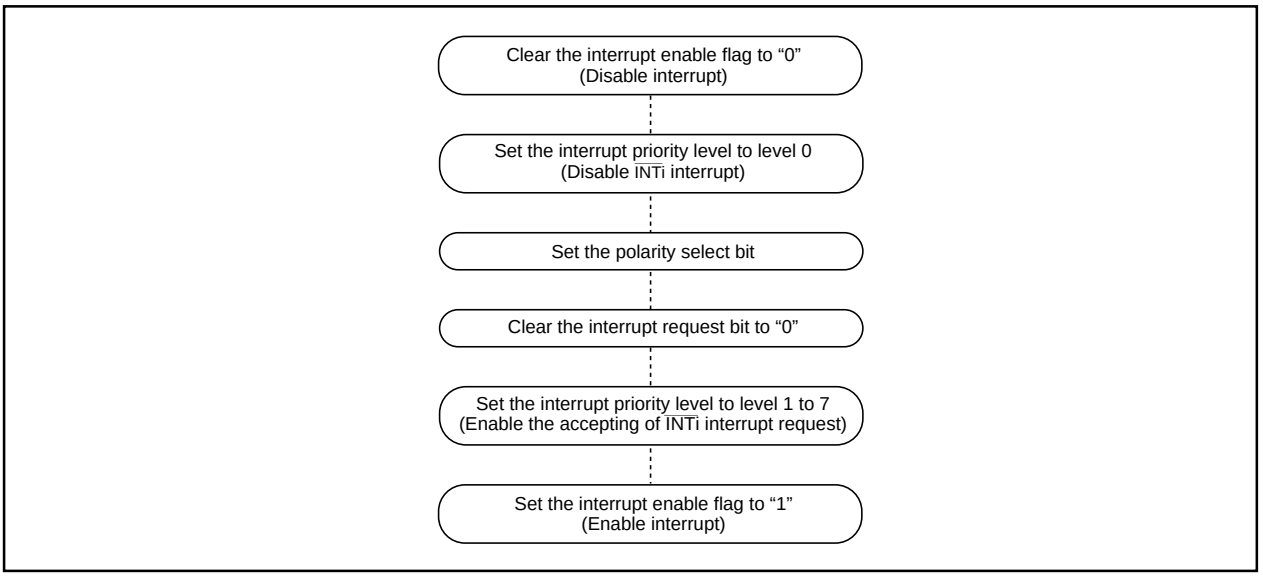

Figure 2.7.14 Switching condition of $\overline{\text{INT}}$ interrupt request

(4) Rewrite interrupt control register

- To rewrite the interrupt control register, do so at a point that does not generate the interrupt request for that register. If there is possibility of the interrupt request occur, rewrite the interrupt control register after the interrupt is disabled. The program examples are described as follow:

Example 1:

```
INT_SWITCH1:
    FCLR    I              ; Disable interrupts.
    AND.B   #00h, 0055h    ; Clear TA0IC int. priority level and int. request bit.
    NOP                    ; Four NOP instructions are required when using HOLD function.
    NOP
    FSET    I              ; Enable interrupts.
```

Example 2:

```
INT_SWITCH2:
    FCLR    I              ; Disable interrupts.
    AND.B   #00h, 0055h    ; Clear TA0IC int. priority level and int. request bit.
    MOV.W   MEM, R0        ; Dummy read.
    FSET    I              ; Enable interrupts.
```

Example 3:

```
INT_SWITCH3:
    PUSHC   FLG            ; Push Flag register onto stack
    FCLR    I              ; Disable interrupts.
    AND.B   #00h, 0055h    ; Clear TA0IC int. priority level and int. request bit.
    POPC    FLG            ; Enable interrupts.
```

The reason why two NOP instructions (four when using the HOLD function) or dummy read are inserted before FSET I in Examples 1 and 2 is to prevent the interrupt enable flag I from being set before the interrupt control register is rewritten due to effects of the instruction queue.

- When a instruction to rewrite the interrupt control register is executed but the interrupt is disabled, the interrupt request bit is not set sometimes even if the interrupt request for that register has been generated. This will depend on the instruction. If this creates problems, use the below instructions to change the register.
  Instructions : AND, OR, BCLR, BSET

2.8 Watchdog Timer

The watchdog timer has the function of detecting when the program is out of control. The watchdog timer is a 15-bit counter which down-counts the clock derived by dividing the BCLK using the prescaler. A watchdog timer interrupt is generated when an underflow occurs in the watchdog timer. When X_{IN} is selected for the BCLK, bit 7 of the watchdog timer control register (address $000F_{16}$) selects the prescaler division ratio (by 16 or by 128). When X_{CIN} is selected as the BCLK , the prescaler is set for division by 2 regardless of bit 7 of the watchdog timer control register (address $000F_{16}$). Thus the watchdog timer's period can be calculated as given below. The watchdog timer's period is, however, subject to an error due to the pre-scaler.

With X_{IN} chosen for BCLK

Watchdog timer period = $\dfrac{\text{pre-scaler dividing ratio (16 or 128)} \times \text{watchdog timer count (32768)}}{\text{BCLK}}$

With X_{CIN} chosen for BCLK

Watchdog timer period = $\dfrac{\text{pre-scaler dividing ratio (2)} \times \text{watchdog timer count (32768)}}{\text{BCLK}}$

For example suppose that BCLK runs at 10 MHz and that 16 has been chosen for the dividing ratio of the pre-scaler, then the watchdog timer's period becomes approximately 52.4 ms.

The watchdog timer is initialized by writing to the watchdog timer start register (address $000E_{16}$) and when a watchdog timer interrupt request is generated. The prescaler is initialized only when the microcomputer is reset. After a reset is cancelled, the watchdog timer and prescaler are both stopped. The count is started by writing to the watchdog timer start register (address $000E_{16}$).
Figure 2.8.1 shows the block diagram of the watchdog timer. Figure 2.8.2 shows the watchdog timer control register and Figure 2.8.3 shows the watchdog timer start register.

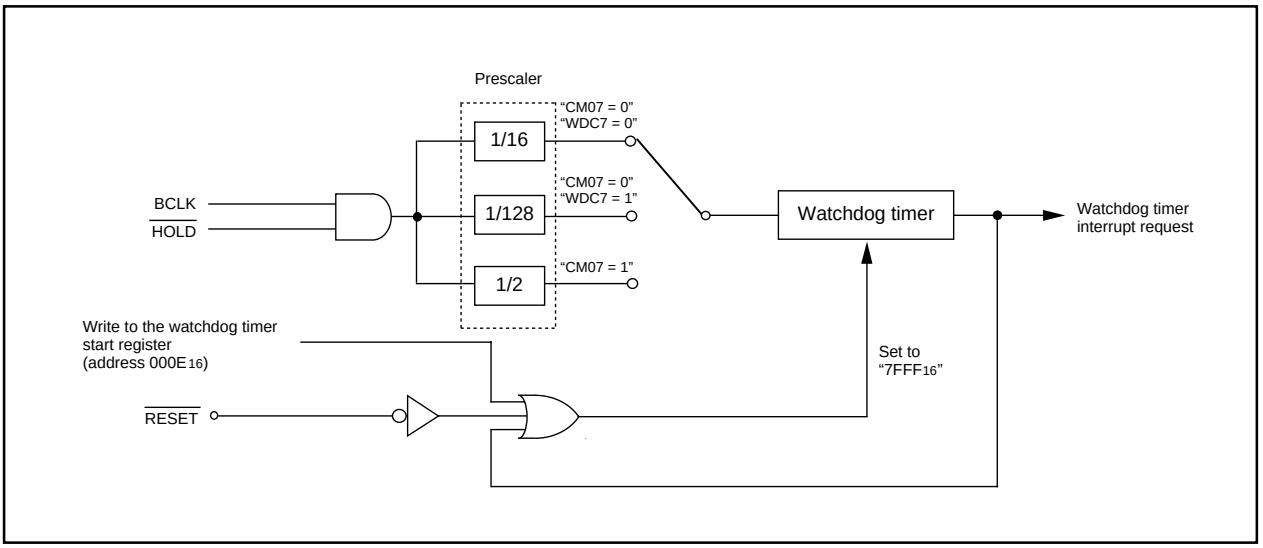

Figure 2.8.1 Block diagram of watchdog timer

Watchdog timer control register

b7	b6	b5	b4	b3	b2	b1	b0
	0	0					

Symbol	Address	When reset
WDC	000F16	000?????2

Bit symbol	Bit name	Function	R	W
	High-order bit of watchdog timer		○	×
	Reserved bits	Must always be set to "0"	○	○
WDC7	Prescaler select bit	0 : Divided by 16 1 : Divided by 128	○	○

Figure 2.8.2 Watchdog timer control register

Watchdog timer start register

b7	b0

Symbol	Address	When reset
WDTS	000E16	Indeterminate

Function	R	W
The watchdog timer is initialized and starts counting after a write instruction to this register. The watchdog timer value is always initialized to "7FFF 16" regardless of whatever value is written.	×	○

Figure 2.8.3 Watchdog timer start register

2.9 DMAC

This microcomputer has two DMAC (direct memory access controller) channels that allow data to be sent to memory without using the CPU. DMAC shares the same data bus with the CPU. The DMAC is given a higher right of using the bus than the CPU, which leads to working the cycle stealing method. On this account, the operation from the occurrence of DMA transfer request signal to the completion of 1-word (16-bit) or 1-byte (8-bit) data transfer can be performed at high speed. Figure 2.9.1 shows the block diagram of the DMAC. Table 2.9.1 shows the DMAC specifications. Figures 2.9.2 to 2.9.7 show the registers used by the DMAC.

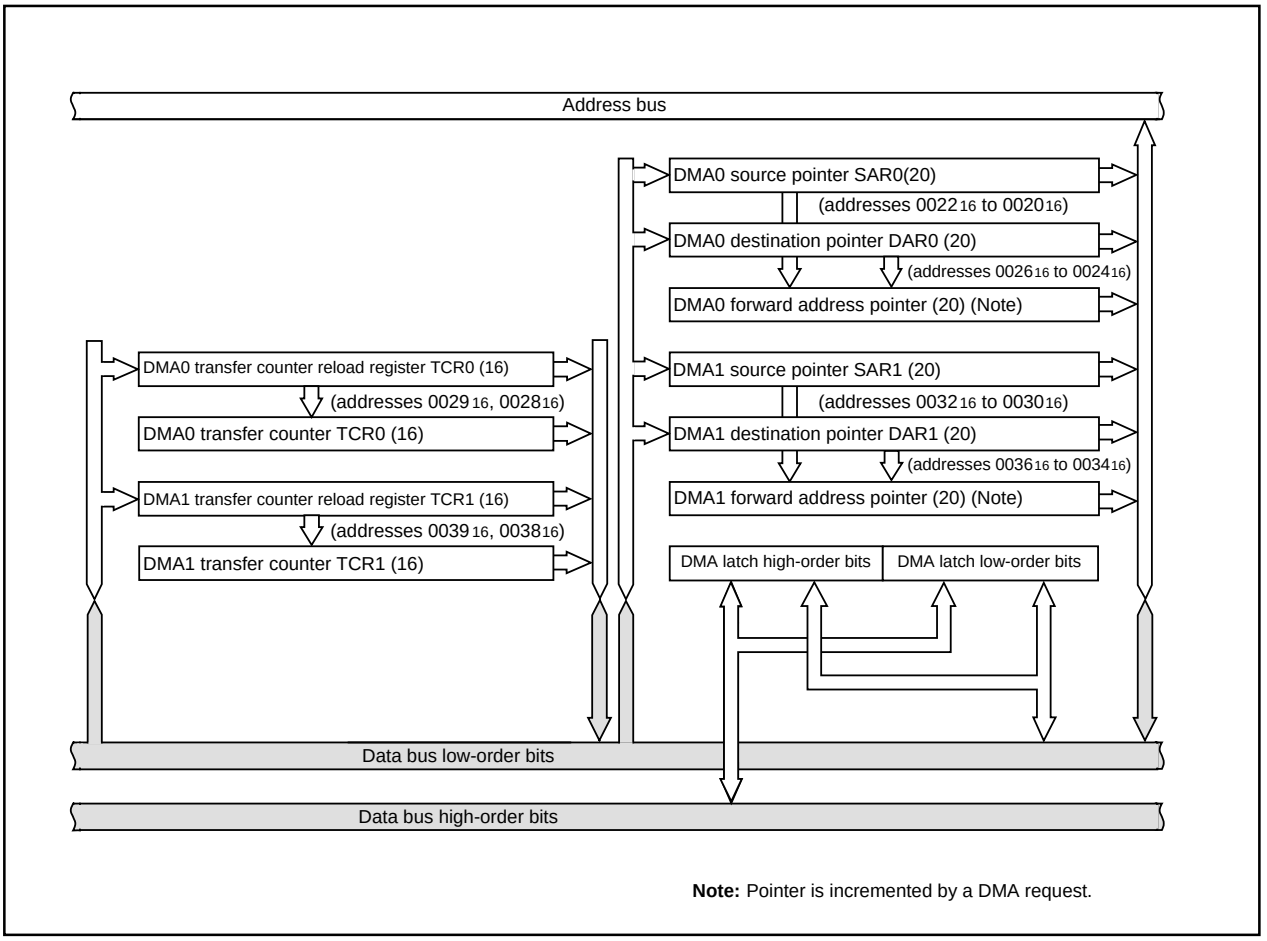

Figure 2.9.1 Block diagram of DMAC

Either a write signal to the software DMA request bit or an interrupt request signal is used as a DMA transfer request signal. But the DMA transfer is affected neither by the interrupt enable flag (I flag) nor by the interrupt priority level. The DMA transfer doesn't affect any interrupts either.

If the DMAC is active (the DMA enable bit is set to 1), data transfer starts every time a DMA transfer request signal occurs. If the cycle of the occurrences of DMA transfer request signals is higher than the DMA transfer cycle, there can be instances in which the number of transfer requests doesn't agree with the number of transfers. For details, see the description of the DMA request bit.

Table 2.9.1 DMAC specifications

Item	Specification
No. of channels	2 (cycle steal method)
Transfer memory space	• From any address in the 1M bytes space to a fixed address • From a fixed address to any address in the 1M bytes space • From a fixed address to a fixed address (Note that DMA-related registers [0020_{16} to $003F_{16}$] cannot be accessed)
Maximum No. of bytes transferred	128K bytes (with 16-bit transfers) or 64K bytes (with 8-bit transfers)
DMA request factors (Note)	Falling edge or both edge of pin $\overline{INT_0}$ Falling edge of pin $\overline{INT_1}$ Timer A0 to timer A4 interrupt requests Timer B0 to timer B2 interrupt requests UART0 transmission and reception interrupt requests UART2 transmission and reception interrupt requests Multi-master I^2C-BUS interface 0 interrupt request Multi-master I^2C-BUS interface 1 interrupt request A-D conversion interrupt request OSD1 and OSD2 interrupt requests Data slicer interrupt request V_{SYNC} interrupt request Software triggers
Channel priority	DMA0 takes precedence if DMA0 and DMA1 requests are generated simultaneously
Transfer unit	8 bits or 16 bits
Transfer address direction	forward/fixed (forward direction cannot be specified for both source and destination simultaneously)
Transfer mode	• Single transfer mode After the transfer counter underflows, the DMA enable bit turns to “0”, and the DMAC turns inactive • Repeat transfer mode After the transfer counter underflows, the value of the transfer counter reload register is reloaded to the transfer counter. The DMAC remains active unless a “0” is written to the DMA enable bit.
DMA interrupt request generation timing	When an underflow occurs in the transfer counter
Active	When the DMA enable bit is set to “1”, the DMAC is active. When the DMAC is active, data transfer starts every time a DMA transfer request signal occurs.
Inactive	• When the DMA enable bit is set to “0”, the DMAC is inactive. • After the transfer counter underflows in single transfer mode
Forward address pointer and reload timing for transfer counter	At the time of starting data transfer immediately after turning the DMAC active, the value of one of source pointer and destination pointer - the one specified for the forward direction - is reloaded to the forward direction address pointer, and the value of the transfer counter reload register is reloaded to the transfer counter.
Writing to register	Registers specified for forward direction transfer are always write enabled. Registers specified for fixed address transfer are write-enabled when the DMA enable bit is “0”.
Reading the register	Can be read at any time. However, when the DMA enable bit is “1”, reading the register set up as the forward register is the same as reading the value of the forward address pointer.

Note: DMA transfer is not effective to any interrupt. DMA transfer is affected neither by the interrupt enable flag (I flag) nor by the interrupt priority level.

DMA0 request cause select register

b7	b6	b5	b4	b3	b2	b1	b0
		X	X				

Symbol	Address	When reset
DM0SL	$03B8_{16}$	00_{16}

Bit symbol	Bit name	Function	R	W
DSEL0	DMA request cause select bit	b3 b2 b1 b0 0 0 0 0 : Falling edge of $\overline{INT_0}$ pin 0 0 0 1 : Software trigger 0 0 1 0 : Timer A0 0 0 1 1 : Timer A1 0 1 0 0 : Timer A2 0 1 0 1 : Timer A3 0 1 1 0 : Timer A4 (DMS = 0) /two edges of $\overline{INT_0}$ pin (DMS=1) 0 1 1 1 : Timer B0 (DMS = 0) /OSD1 (DMS=1) 1 0 0 0 : Timer B1 (DMS = 0) /OSD2 (DMS=1) 1 0 0 1 : Timer B2 (DMS = 0) /Multi-master I²C-BUS interface 0 (DMS=1) 1 0 1 0 : UART0 transmit 1 0 1 1 : UART0 receive 1 1 0 0 : UART2 transmit 1 1 0 1 : UART2 receive 1 1 1 0 : A-D conversion 1 1 1 1 : Data slicer	○	○
DSEL1			○	○
DSEL2			○	○
DSEL3			○	○
Nothing is assigned. In an attempt to write to these bits, write “0.” The value, if read, turns out to be “0.”			–	–
DMS	DMA request cause expansion bit	0 : Normal 1 : Expanded cause	○	○
DSR	Software DMA request bit	If software trigger is selected, a DMA request is generated by setting this bit to “1” (When read, the value of this bit is always “0”)	○	○

Figure 2.9.2 DMA0 request cause select register

DMA1 request cause select register

b7	b6	b5	b4	b3	b2	b1	b0
		X	X				

Symbol	Address	When reset
DM1SL	$03BA_{16}$	00_{16}

Bit symbol	Bit name	Function	R	W
DSEL0	DMA request cause select bit	b3 b2 b1 b0 0 0 0 0 : Falling edge of $\overline{INT_1}$ pin 0 0 0 1 : Software trigger 0 0 1 0 : Timer A0 0 0 1 1 : Timer A1 0 1 0 0 : Timer A2 0 1 0 1 : Timer A3 (DMS = 0) /OSD1 (DMS = 1) 0 1 1 0 : Timer A4 (DMS = 0) /OSD2 (DMS = 1) 0 1 1 1 : Timer B0 /Multi-master I²C-BUS interface 1 (DMS = 1) 1 0 0 0 : Timer B1 1 0 0 1 : Timer B2 1 0 1 0 : UART0 transmit 1 0 1 1 : UART0 receive 1 1 0 0 : UART2 transmit 1 1 0 1 : UART2 receive 1 1 1 0 : A-D conversion 1 1 1 1 : V_{SYNC}	○	○
DSEL1			○	○
DSEL2			○	○
DSEL3			○	○
Nothing is assigned. In an attempt to write to these bits, write “0.” The value, if read, turns out to be “0.”			–	–
DMS	DMA request cause expansion bit	0 : Normal 1 : Expanded cause	○	○
DSR	Software DMA request bit	If software trigger is selected, a DMA request is generated by setting this bit to “1” (When read, the value of this bit is always “0”)	○	○

Figure 2.9.3 DMA1 request cause select register

DMAi control register

b7	b6	b5	b4	b3	b2	b1	b0
X	X						

Symbol	Address	When reset
DMiCON(i=0,1)	$002C_{16}$, $003C_{16}$	00000?00$_2$

Bit symbol	Bit name	Function	R	W
DMBIT	Transfer unit bit select bit	0 : 16 bits 1 : 8 bits	○	○
DMASL	Repeat transfer mode select bit	0 : Single transfer 1 : Repeat transfer	○	○
DMAS	DMA request bit (Note 1)	0 : DMA not requested 1 : DMA requested	○	○ (Note 2)
DMAE	DMA enable bit	0 : Disabled 1 : Enabled	○	○
DSD	Source address direction select bit (Note 3)	0 : Fixed 1 : Forward	○	○
DAD	Destination address direction select bit (Note 3)	0 : Fixed 1 : Forward	○	○
Nothing is assigned. In an attempt to write to these bits, write “0”. The value, if read, turns out to be “0.”			–	–

Notes 1: DMA request can be cleared by resetting the bit.
2: This bit can only be set to “0.”
3: Source address direction select bit and destination address direction select bit cannot be set to “1” simultaneously.

Figure 2.9.4 DMAi control register (i = 0, 1)

DMAi source pointer (i = 0, 1)

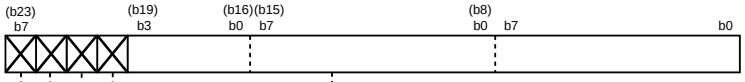

Symbol	Address	When reset
SAR0	0022_{16} to 0020_{16}	Indeterminate
SAR1	0032_{16} to 0030_{16}	Indeterminate

Function	Transfer count specification	R	W
• Source pointer Stores the source address	00000_{16} to $FFFFF_{16}$	○	○
Nothing is assigned. In an attempt to write to these bits, write “0”. The value, if read, turns out to be “0.”		—	—

Figure 2.9.5 DMAi source pointer (i = 0, 1)

DMAi destination pointer (i = 0, 1)

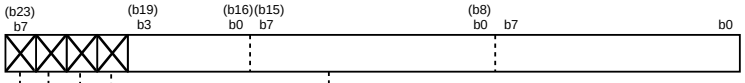

Symbol	Address	When reset
DAR0	0026_{16} to 0024_{16}	Indeterminate
DAR1	0036_{16} to 0034_{16}	Indeterminate

Function	Transfer count specification	R	W
• Destination pointer Stores the destination address	00000_{16} to $FFFFF_{16}$	○	○
Nothing is assigned. In an attempt to write to these bits, write “0”. The value, if read, turns out to be “0.”		—	—

Figure 2.9.6 DMAi destination pointer (i = 0, 1)

DMAi transfer counter (i = 0, 1)

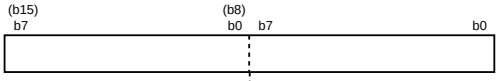

Symbol	Address	When reset
TCR0	0029_{16}, 0028_{16}	Indeterminate
TCR1	0039_{16}, 0038_{16}	Indeterminate

Function	Transfer count specification	R	W
• Transfer counter Set a value one less than the transfer count	0000_{16} to $FFFF_{16}$	○	○

Figure 2.9.7 DMAi transfer counter (i = 0, 1)

2.9.1 Transfer Cycle

The transfer cycle consists of the bus cycle in which data is read from memory or from the SFR area (source read) and the bus cycle in which the data is written to memory or to the SFR area (destination write). The number of read and write bus cycles depends on the source and destination addresses. In memory expansion mode and microprocessor mode, the number of read and write bus cycles also depends on the level of the BYTE pin. Also, the bus cycle itself is longer when software waits are inserted.

(1) Effect of source and destination addresses

When 16-bit data is transferred on a 16-bit data bus, and the source and destination both start at odd addresses, there are one more source read cycle and destination write cycle than when the source and destination both start at even addresses.

(2) Effect of BYTE pin level

When transferring 16-bit data over an 8-bit data bus (BYTE pin = “H”) in memory expansion mode and microprocessor mode, the 16 bits of data are sent in two 8-bit blocks. Therefore, two bus cycles are required for reading the data and two are required for writing the data. Also, in contrast to when the CPU accesses internal memory, when the DMAC accesses internal memory (internal ROM, internal RAM, and SFR), these areas are accessed using the data size selected by the BYTE pin.

(3) Effect of software wait

When the SFR area, the OSD RAM area, or a memory area with a software wait is accessed, the number of cycles is increased for the wait by 1 bus cycle. The length of the cycle is determined by BCLK.

Figure 2.9.8 shows the example of the transfer cycles for a source read. For convenience, the destination write cycle is shown as one cycle and the source read cycles for the different conditions are shown. In reality, the destination write cycle is subject to the same conditions as the source read cycle, with the transfer cycle changing accordingly. When calculating the transfer cycle, remember to apply the respective conditions to both the destination write cycle and the source read cycle. For example (2) in Figure 47, if data is being transferred in 16-bit units on an 8-bit bus, two bus cycles are required for both the source read cycle and the destination write cycle.

(1) 8-bit transfers
16-bit transfers from even address and the source address is even.

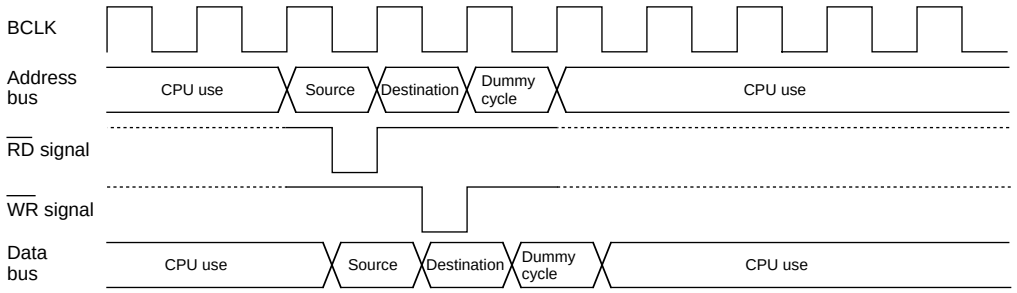

(2) 16-bit transfers and the source address is odd
Transferring 16-bit data on an 8-bit data bus (In this case, there are also two destination write cycles).

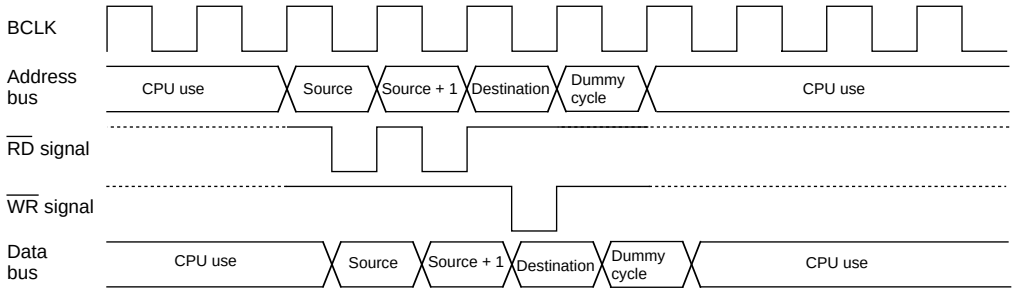

(3) One wait is inserted into the source read under the conditions in (1)

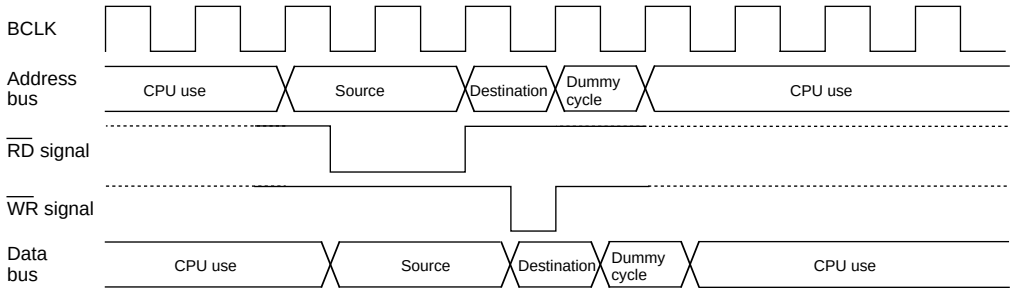

(4) One wait is inserted into the source read under the conditions in (2)
(When 16-bit data is transferred on an 8-bit data bus, there are two destination write cycles).

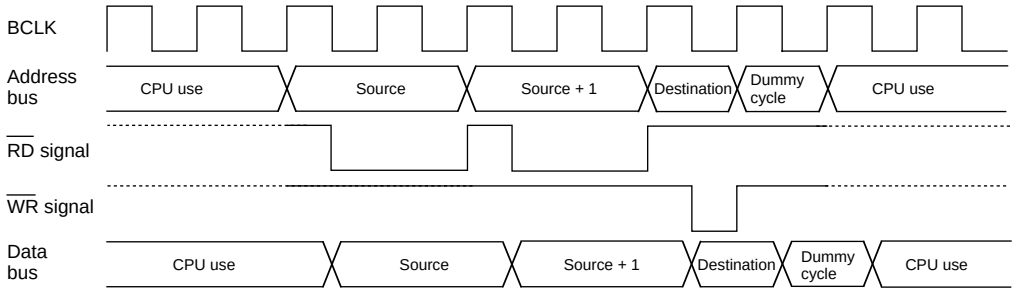

Note: The same timing changes occur with the respective conditions at the destination as at the source.

Figure 2.9.8 Example of the transfer cycles for a source read

2.9.2 DMAC Transfer Cycles

Any combination of even or odd transfer read and write addresses is possible. Table 2.9.2 shows the number of DMAC transfer cycles.

The number of DMAC transfer cycles can be calculated as follows:

No. of transfer cycles per transfer unit = No. of read cycles × j + No. of write cycles × k

Table 2.9.2 No. of DMAC transfer cycles

Transfer unit	Bus width	Access address	Single-chip mode		Memory expansion mode Microprocessor mode	
			No. of read cycles	No. of write cycles	No. of read cycles	No. of write cycles
8-bit transfers (DMBIT= “1”)	16-bit (BYTE= “L”)	Even	1	1	1	1
		Odd	1	1	1	1
	8-bit (BYTE = “H”)	Even	—	—	1	1
		Odd	—	—	1	1
16-bit transfers (DMBIT= “0”)	16-bit (BYTE = “L”)	Even	1	1	1	1
		Odd	2	2	2	2
	8-bit (BYTE = “H”)	Even	—	—	2	2
		Odd	—	—	2	2

Coefficient j, k

Internal memory			External memory		
Internal ROM/RAM No wait	Internal ROM/RAM With wait	SFR area /OSD RAM	Separate bus No wait	Separate bus With wait	Multiplex bus
1	2	2	1	2	3

2.9.3 DMA Enable Bit

Setting the DMA enable bit to 1 makes the DMAC active. The DMAC carries out the following operations at the time data transfer starts immediately after DMAC is turned active.

(1) Reloads the value of one of the source pointer and the destination pointer - the one specified for the forward direction - to the forward direction address pointer.

(2) Reloads the value of the transfer counter reload register to the transfer counter.

Thus overwriting 1 to the DMA enable bit with the DMAC being active carries out the operations given above, so the DMAC operates again from the initial state at the instant 1 is overwritten to the DMA enable bit.

2.9.4 DMA Request Bit

The DMAC can generate a DMA transfer request signal triggered by a factor chosen in advance out of DMA request factors for each channel.

DMA request factors include the following.

* Factors effected by using the interrupt request signals from the built-in peripheral functions and software DMA factors (internal factors) effected by a program.

* External factors effected by utilizing the input from external interrupt signals.

For the selection of DMA request factors, see the descriptions of the DMAi factor selection register.

The DMA request bit turns to 1 if the DMA transfer request signal occurs regardless of the DMAC's state (regardless of whether the DMA enable bit is set 1 or to 0). It turns to 0 immediately before data transfer starts.

In addition, it can be set to 0 by use of a program, but cannot be set to 1.

There can be instances in which a change in DMA request factor selection bit causes the DMA request bit to turn to 1. So be sure to set the DMA request bit to 0 after the DMA request factor selection bit is changed.

The DMA request bit turns to 1 if a DMA transfer request signal occurs, and turns to 0 immediately before data transfer starts. If the DMAC is active, data transfer starts immediately, so the value of the DMA request bit, if read by use of a program, turns out to be 0 in most cases. To examine whether the DMAC is active, read the DMA enable bit.

Here follows the timing of changes in the DMA request bit.

(1) Internal factors

Except the DMA request factors triggered by software, the timing for the DMA request bit to turn to 1 due to an internal factor is the same as the timing for the interrupt request bit of the interrupt control register to turn to 1 due to several factors.

Turning the DMA request bit to 1 due to an internal factor is timed to be effected immediately before the transfer starts.

(2) External factors

An external factor is a factor caused to occur by the leading edge of input from the $\overline{\text{INTi}}$ pin (i depends on which DMAC channel is used).

Selecting the $\overline{\text{INTi}}$ pins as external factors using the DMA request factor selection bit causes input from these pins to become the DMA transfer request sig=ls.

The timing for the DMA request bit to turn to 1 when an external factor is selected synchronizes with the signal's edge applicable to the function specified by the DMA request factor selection bit (synchronizes with the trailing edge of the input signal to each $\overline{\text{INTi}}$ pin, for example).
With an external factor selected, the DMA request bit is timed to turn to 0 immediately before data transfer starts similarly to the state in which an internal factor is selected.

(3) The priorities of channels and DMA transfer timing

If a DMA transfer request signal falls on a single sampling cycle (a sampling cycle means one period from the leading edge to the trailing edge of BCLK), the DMA request bits of applicable channels concurrently turn to 1. If the channels are active at that moment, DMA0 is given a high priority to start data transfer. When DMA0 finishes data transfer, it gives the bus right to the CPU. When the CPU finishes single bus access, then DMA1 starts data transfer and gives the bus right to the CPU. Figure 2.9.9 illustrates these operations.
An example in which DMA transfer is carried out in minimum cycles at the time when DMA transfer request signals due to external factors concurrently occur.

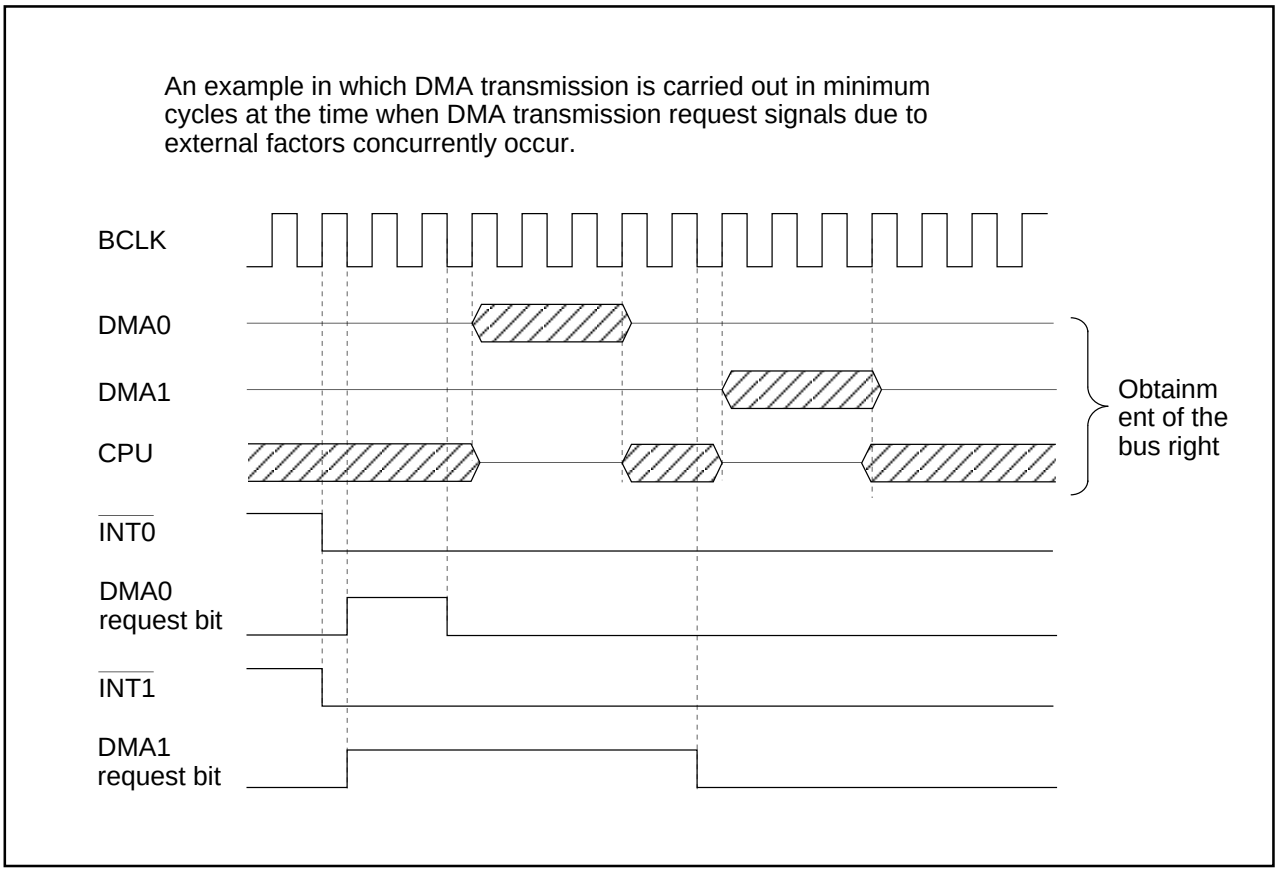

Figure 2.9.9 An example of DMA transfer effected by external factors

2.10 Timer

There are eight 16-bit timers. These timers can be classified by function into timers A (five) and timers B (three). All these timers function independently. Figures 2.10.1 and 2.10.2 show the block diagram of timers.

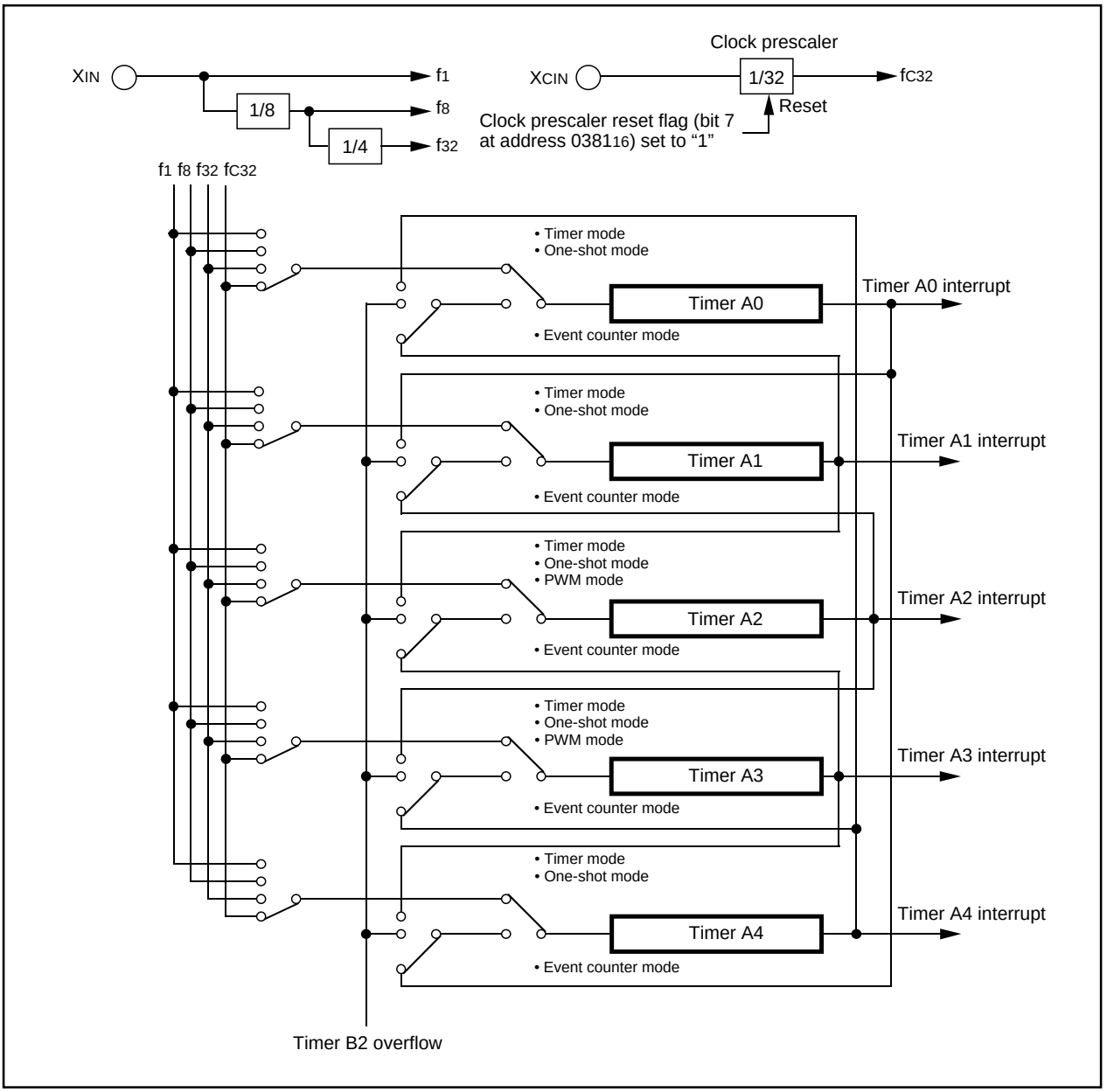

Figure 2.10.1 Timer A block diagram

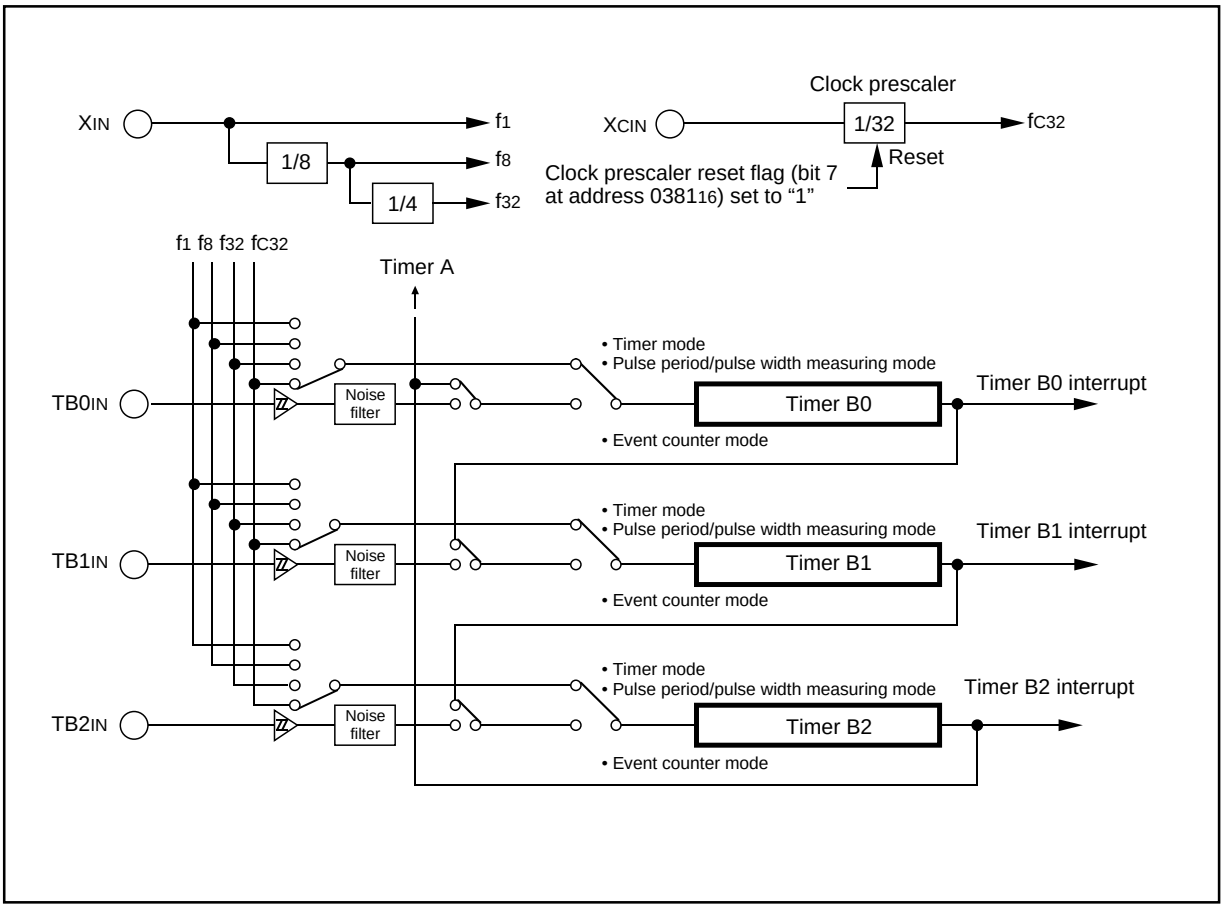

Figure 2.10.2 Timer B block diagram

2.10.1 Timer A

Figure 2.10.3 shows the block diagram of timer A. Figures 2.10.4 to 2.10.10 show the timer A-related registers.

Except the pulse output function, timers A0 through A4 all have the same function. Use the timer Ai mode register (i = 0 to 4) bits 0 and 1 to choose the desired mode.

Timer A has the four operation modes listed as follows:

- Timer mode: The timer counts an internal count source.
- Event counter mode: The timer counts a timer over flow.
- One-shot timer mode: The timer stops counting when the count reaches “0000_{16}”.
- Pulse width modulation (PWM) mode: The timer outputs pulses of a given width.

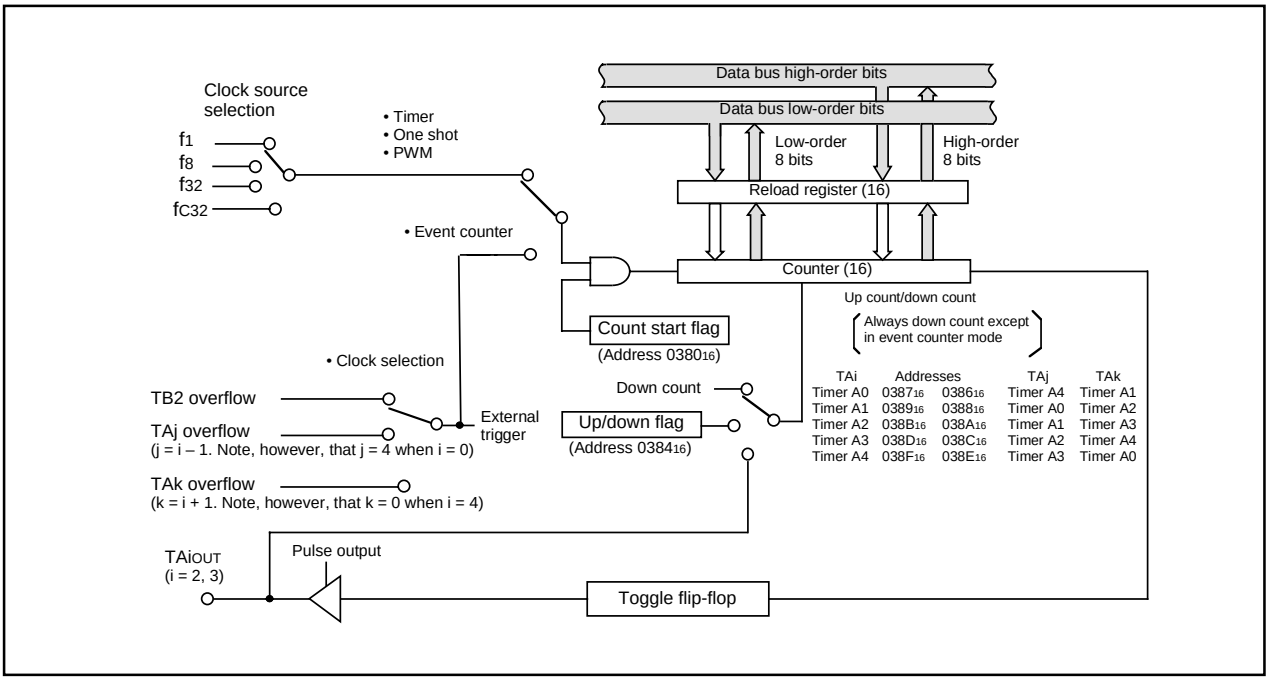

Figure 2.10.3 Block diagram of timer A

Timer Ai mode register

Symbol	Address	When reset
TAiMR(i=0 to 4)	0396_{16} to $039A_{16}$	00_{16}

b7	b6	b5	b4	b3	b2	b1	b0

Bit symbol	Bit name	Function	R	W
TMOD0	Operation mode select bit	b1 b0 0 0 : Timer mode 0 1 : Event counter mode 1 0 : One-shot timer mode 1 1 : Pulse width modulation (PWM) mode (Note)	○	○
TMOD1			○	○
MR0	Function varies with each operation mode		○	○
MR1			○	○
MR2			○	○
MR3			○	○
TCK0	Count source select bit (Function varies with each operation mode)		○	○
TCK1			○	○

Note: Only timers 2 and 3 have PWM mode.

Figure 2.10.4 Timer Ai mode register (i = 0 to 4)

Timer Ai register (Note)

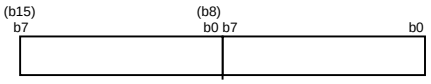

Symbol	Address	When reset
TA0	0387_{16},0386_{16}	Indeterminate
TA1	0389_{16},0388_{16}	Indeterminate
TA2	$038B_{16}$,$038A_{16}$	Indeterminate
TA3	$038D_{16}$,$038C_{16}$	Indeterminate
TA4	$038F_{16}$,$038E_{16}$	Indeterminate

Function	Values that can be set	R	W
• Timer mode Counts an internal count source	0000_{16} to $FFFF_{16}$	○	○
• Event counter mode Counts pulses from an timer overflow	0000_{16} to $FFFF_{16}$	○	○
• One-shot timer mode Counts a one shot width	0000_{16} to $FFFF_{16}$	×	○
• Pulse width modulation mode (16-bit PWM) (TA2, TA3) Functions as a 16-bit pulse width modulator	0000_{16} to $FFFE_{16}$	×	○
• Pulse width modulation mode (8-bit PWM) (TA2, TA3) Timer low-order address functions as an 8-bit prescaler and high-order address functions as an 8-bit pulse width modulator	00_{16} to FE_{16} (Both high-order and low-order addresses)	×	○

Note: Read and write data in 16-bit units.

Figure 2.10.5 Timer Ai register (i = 0 to 4)

Count start flag

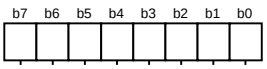

Symbol	Address	When reset
TABSR	0380_{16}	00_{16}

Bit symbol	Bit name	Function	R	W
TA0S	Timer A0 count start flag	0 : Stops counting 1 : Starts counting	○	○
TA1S	Timer A1 count start flag		○	○
TA2S	Timer A2 count start flag		○	○
TA3S	Timer A3 count start flag		○	○
TA4S	Timer A4 count start flag		○	○
TB0S	Timer B0 count start flag		○	○
TB1S	Timer B1 count start flag		○	○
TB2S	Timer B2 count start flag		○	○

Figure 2.10.6 Count start flag

Up/down flag

b7	b6	b5	b4	b3	b2	b1	b0
0	0	0					

Symbol	Address	When reset
UDF	0384_{16}	00_{16}

Bit symbol	Bit name	Function	R	W
TA0UD	Timer A0 up/down flag	0 : Down count 1 : Up count This specification becomes valid when the up/down flag content is selected for up/down switching cause	○	○
TA1UD	Timer A1 up/down flag		○	○
TA2UD	Timer A2 up/down flag		○	○
TA3UD	Timer A3 up/down flag		○	○
TA4UD	Timer A4 up/down flag		○	○
Reserved bit		Must always be set to “0”	×	○

Figure 2.10.7 Up/down flag

One-shot start flag

b7	b6	b5	b4	b3	b2	b1	b0
		X					

Symbol	Address	When reset
ONSF	0382_{16}	$00X00000_{2}$

Bit symbol	Bit name	Function	R	W
TA0OS	Timer A0 one-shot start flag	1 : Timer start When read, the value is “0”	○	○
TA1OS	Timer A1 one-shot start flag		○	○
TA2OS	Timer A2 one-shot start flag		○	○
TA3OS	Timer A3 one-shot start flag		○	○
TA4OS	Timer A4 one-shot start flag		○	○
Nothing is assigned. In an attempt to write to this bit, write “0.” The value, if read, turns out to be indeterminate.			—	—
TA0TGL	Timer A0 event/trigger select bit	b7 b6 0 0 : Do not set 0 1 : TB2 overflow is selected 1 0 : TA4 overflow is selected 1 1 : TA1 overflow is selected	○	○
TA0TGH			○	○

Figure 2.10.8 One-shot start flag

Trigger select register

b7	b6	b5	b4	b3	b2	b1	b0

Symbol	Address	When reset
TRGSR	0383_{16}	00_{16}

Bit symbol	Bit name	Function	R	W
TA1TGL	Timer A1 event/trigger select bit	b1 b0 0 0 : Do not set 0 1 : TB2 overflow is selected 1 0 : TA0 overflow is selected 1 1 : TA2 overflow is selected	○	○
TA1TGH			○	○
TA2TGL	Timer A2 event/trigger select bit	b3 b2 0 0 : Do not set 0 1 : TB2 overflow is selected 1 0 : TA1 overflow is selected 1 1 : TA3 overflow is selected	○	○
TA2TGH			○	○
TA3TGL	Timer A3 event/trigger select bit	b5 b4 0 0 : Do not set 0 1 : TB2 overflow is selected 1 0 : TA2 overflow is selected 1 1 : TA4 overflow is selected	○	○
TA3TGH			○	○
TA4TGL	Timer A4 event/trigger select bit	b7 b6 0 0 : Do not set 0 1 : TB2 overflow is selected 1 0 : TA3 overflow is selected 1 1 : TA0 overflow is selected	○	○
TA4TGH			○	○

Figure 2.10.9 Trigger select register

Clock prescaler reset flag

b7	b6	b5	b4	b3	b2	b1	b0
	X	X	X	X	X	X	X

Symbol	Address	When reset
CPSRF	0381_{16}	$0XXXXXXX_2$

Bit symbol	Bit name	Function	R	W
Nothing is assigned. In an attempt to write to these bits, write “0.” The value, if read, turns out to be indeterminate.			—	—
CPSR	Clock prescaler reset flag	0 : No effect 1 : Prescaler is reset (When read, the value is “0”)	○	○

Figure 2.10.10 Clock prescaler reset flag

(1) Timer mode

In this mode, the timer counts an internally generated count source. (See Table 2.10.1.) Figure 2.10.11 shows the timer Ai mode register in timer mode.

Table 2.10.1 Specifications of timer mode

Item	Specification
Count source	f_1, f_8, f_{32}, f_{c32}
Count operation	• Down count • When the timer underflows, it reloads the reload register contents before continuing counting
Divide ratio	1/(n+1) n : Set value
Count start condition	Count start flag is set (= 1)
Count stop condition	Count start flag is reset (= 0)
Interrupt request generation timing	When the timer underflows
$TA2_{OUT}$/$TA3_{OUT}$ pin function	Programmable I/O port or pulse output
Read from timer	Count value can be read out by reading timer Ai register
Write to timer	• When counting stopped When a value is written to timer Ai register, it is written to both reload register and counter • When counting in progress When a value is written to timer Ai register, it is written to only reload register (Transferred to counter at next reload time)
Select function	• Pulse output function Each time the timer underflows, the TAi_{OUT} pin's polarity is reversed

Timer Ai mode register

b7	b6	b5	b4	b3	b2	b1	b0
		0	0	0		0	0

Symbol	Address	When reset
TAiMR(i=0 to 4)	039_{16} to $039A_{16}$	00_{16}

Bit symbol	Bit name	Function	R	W
TMOD0	Operation mode select bit	b1 b0 0 0 : Timer mode	○	○
TMOD1			○	○
MR0	Pulse output function select bit (Note 2)	0 : Pulse is not output ($TA2_{OUT}$/$TA3_{OUT}$ pin is a normal port pin) 1 : Pulse is output (Note 1) ($TA2_{OUT}$/$TA3_{OUT}$ pin is a pulse output pin)	○	○
Reserved bits		Must always be set to "0"	○	○
MR3	0 (Must always be set to "0" in timer mode)		○	○
TCK0	Count source select bit	b7 b6 0 0 : f_1 0 1 : f_8 1 0 : f_{32} 1 1 : f_{C32}	○	○
TCK1			○	○

Notes 1 : The settings of the corresponding port register and port direction register are invalid.
2 : This bit of TAiMR (i = 0, 1, 4) must always be set to "0."

Figure 2.10.11 Timer Ai mode register in timer mode (i = 0 to 4)

(2) Event counter mode

In this mode, the timer counts an internal timer's overflow.

Table 2.10.2 Timer specifications in event counter mode

Item	Specification
Count source	• TB2 overflow, TAj overflow, TAk overflow
Count operation	• Up count or down count can be selected by external signal or software • When the timer overflows or underflows, it reloads the reload register contents before continuing counting (Note)
Divide ratio	1/ ($FFFF_{16}$ - n + 1) for up count 1/ (n + 1) for down count n : Set value
Count start condition	Count start flag is set (= 1)
Count stop condition	Count start flag is reset (= 0)
Interrupt request generation timing	The timer overflows or underflows
$TA2_{OUT}$/$TA3_{OUT}$ pin function	Programmable I/O port, pulse output, or up/down count select input
Read from timer	Count value can be read out by reading timer Ai register
Write to timer	• When counting stopped When a value is written to timer Ai register, it is written to both reload register and counter • When counting in progress When a value is written to timer Ai register, it is written to only reload register (Transferred to counter at next reload time)
Select function	• Free-run count function Even when the timer overflows or underflows, the reload register content is not reloaded to it • Pulse output function Each time the timer overflows or underflows, the TAi_{OUT} pin's polarity is reversed

Note: This does not apply when the free-run function is selected.

Timer Ai mode register

b7	b6	b5	b4	b3	b2	b1	b0
0		0		0		0	1

Symbol	Address	When reset
TAiMR(i = 0 to 4)	039_{16} to $039A_{16}$	00_{16}

Bit symbol	Bit name	Function	R	W
TMOD0	Operation mode select bit	b1 b0 0 1 : Event counter mode (Note 1)	○	○
TMOD1			○	○
MR0	Pulse output function select bit	0 : Pulse is not output (TA2OUT/TA3OUT pin is a normal port pin) 1 : Pulse is output (Note 2) (TA2OUT/TA3OUT pin is a pulse output pin)	○	○
Reserved bit		Must always be set to “0”	○	○
MR2	Up/down switching cause select bit	0 : Up/down flag’s content 1 : TA2OUT/TA3OUT pin’s input signal (Notes 3, 4)	○	○
MR3	0 : (Must always be set to “0” in event counter mode)		○	○
TCK0	Count operation type select bit	0 : Reload type 1 : Free-run type	○	○
Reserved bit		Must always be set to “0”	○	○

Notes 1: In event counter mode, the count source is selected by the event / trigger select bit (addresses 0382_{16} and 0383_{16}).
2: The settings of the corresponding port register and port direction register are invalid.
3: This bit of TAiMR (i = 0, 1, 4) must always be set to “0.”
4: When an “L” signal is input to the input signal from TA2OUT/TA3OUT pin, the downcount is activated. When “H,” the upcount is activated. Set the corresponding port direction register to “0.”

Figure 2.10.12 Timer Ai mode register in event counter mode (i = 0 to 4)

(3) One-shot timer mode

In this mode, the timer operates only once. (See Table 2.10.3.) When a trigger occurs, the timer starts up and continues operating for a given period. Figure 2.10.13 shows the timer Ai mode register in one-shot timer mode.

Table 2.10.3 Timer specifications in one-shot timer mode

Item	Specification
Count source	f_1, f_8, f_{32}, f_{C32}
Count operation	• The timer counts down • When the count reaches 0000_{16}, the timer stops counting after reloading a new count • If a trigger occurs when counting, the timer reloads a new count and restarts counting
Divide ratio	1/n n : Set value
Count start condition	• The timer overflows • The one-shot start flag is set (= 1)
Count stop condition	• A new count is reloaded after the count has reached 0000_{16} • The count start flag is reset (= 0)
Interrupt request generation timing	The count reaches 0000_{16}
$TA2_{OUT}$/$TA3_{OUT}$ pin function	Programmable I/O port or pulse output
Read from timer	When timer Ai register is read, it indicates an indeterminate value
Write to timer	• When counting stopped When a value is written to timer Ai register, it is written to both reload register and counter • When counting in progress When a value is written to timer Ai register, it is written to only reload register (Transferred to counter at next reload time)

Timer Ai mode register

b7	b6	b5	b4	b3	b2	b1	b0
		0		0		1	0

Symbol	Address	When reset
TAiMR(i = 0 to 4)	0396_{16} to $039A_{16}$	00_{16}

Bit symbol	Bit name	Function	R	W
TMOD0	Operation mode select bit	b1 b0 1 0 : One-shot timer mode	○	○
TMOD1			○	○
MR0	Pulse output function select bit (Note 2)	0 : Pulse is not output (TA2OUT/TA3OUT pin is a normal port pin) 1 : Pulse is output (Note 1) (TA2OUT/TA3OUT pin is a pulse output pin)	○	○
Reserved bits		Must always be set to "0"	○	○
MR2	Trigger select bit	0 : Count start flag is valid 1 : Selected by event/trigger select register	○	○
MR3	0 (Must always be "0" in one-shot timer mode)		○	○
TCK0	Count source select bit	b7 b6 0 0 : f_1 0 1 : f_8 1 0 : f_{32} 1 1 : f_{C32}	○	○
TCK1			○	○

Notes 1 : The settings of the corresponding port register and port direction register are invalid.
2 : This bit of TAiMR (i = 0, 1, 4) must always be set to "0."

Figure 2.10.13 Timer Ai mode register in one-shot timer mode (i = 0 to 4)

(4) Pulse width modulation (PWM) mode

In this mode, the timer outputs pulses of a given width in succession. (See Table 2.10.4.) In this mode, the counter functions as either a 16-bit pulse width modulator or an 8-bit pulse width modulator. Figure 2.10.14 shows the timer Ai mode register in pulse width modulation mode. Figure 2.10.15 shows the example of how an 8-bit pulse width modulator operates.

Table 2.10.4 Timer specifications in pulse width modulation mode

Item	Specification
Count source	f_1, f_8, f_{32}, f_{C32}
Count operation	• The timer counts down (operating as an 8-bit or a 16-bit pulse width modulator) • The timer reloads a new count at a rising edge of PWM pulse and continues counting • The timer is not affected by a trigger that occurs when counting
16-bit PWM	• High level width n / fi n : Set value • Cycle time $(2^{16}-1)$ / fi fixed
8-bit PWM	• High level width n × (m+1) / fi n : values set to timer Ai register's high-order address • Cycle time $(2^{8}-1)$ × (m+1) / fi m : values set to timer Ai register's low-order address
Count start condition	• The timer overflows • The count start flag is set (= 1)
Count stop condition	• The count start flag is reset (= 0)
Interrupt request generation timing	PWM pulse goes "L"
$TA2_{OUT}$/$TA3_{OUT}$ pin function	Pulse output
Read from timer	When timer Ai register is read, it indicates an indeterminate value
Write to timer	• When counting stopped When a value is written to timer Ai register, it is written to both reload register and counter • When counting in progress When a value is written to timer Ai register, it is written to only reload register (Transferred to counter at next reload time)

Timer Ai mode register

b7	b6	b5	b4	b3	b2	b1	b0
				0	1	1	1

Symbol	Address	When reset
TAiMR(i=2 and 3)	039_{16} and 039_{16}	00_{16}

Bit symbol	Bit name	Function	R	W
TMOD0	Operation mode select bit	b1 b0 1 1 : PWM mode	○	○
TMOD1			○	○
MR0	1 (Must always be "1" in PWM mode)		○	○
Reserved bits		Must always be set to "0"	○	○
MR2	Trigger select bit	0: Count start flag is valid 1: Selected by event/trigger select register	○	○
MR3	16/8-bit PWM mode select bit	0: Functions as a 16-bit pulse width modulator 1: Functions as an 8-bit pulse width modulator	○	○
TCK0	Count source select bit	b7 b6 0 0 : f_1 0 1 : f_8 1 0 : f_{32} 1 1 : f_{C32}	○	○
TCK1			○	○

Figure 2.10.14 Timer Ai mode register in pulse width modulation mode (i = 2 and 3)

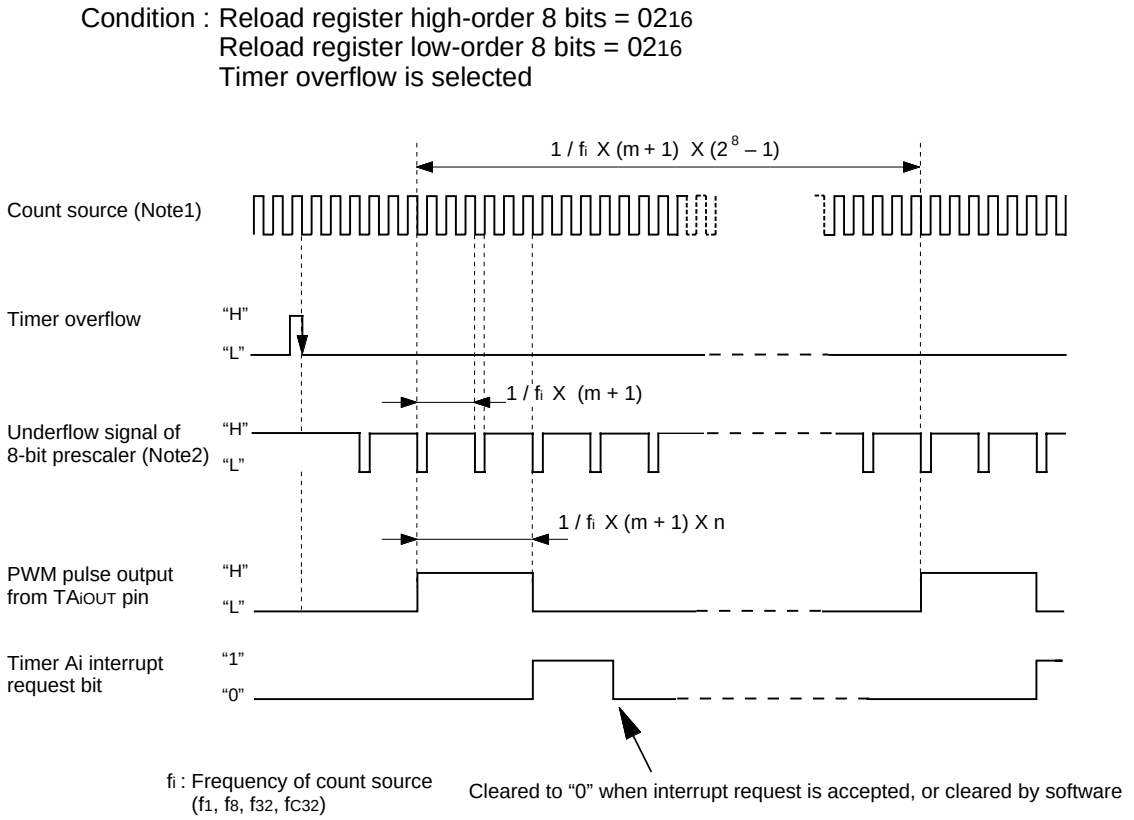

Notes 1: The 8-bit prescaler counts the count source.
2: The 8-bit pulse width modulator counts the 8-bit prescaler's underflow signal.
3: m = 00_{16} to FE_{16}; n = 00_{16} to FE_{16}.

Figure 2.10.15 Example of how an 8-bit pulse width modulator operates

2.10.2 Timer B

Figure 2.10.17 shows the block diagram of timer B. Figures 2.10.17 and 2.10.20 show the timer B-related registers.

Use the timer Bi mode register (i = 0 to 2) bits 0 and 1 to choose the desired mode.

Timer B has three operation modes listed as follows:

- Timer mode: The timer counts an internal count source.
- Event counter mode: The timer counts pulses from an external source or a timer overflow.
- Pulse period/pulse width measuring mode: The timer measures an external signal's pulse period or pulse width.

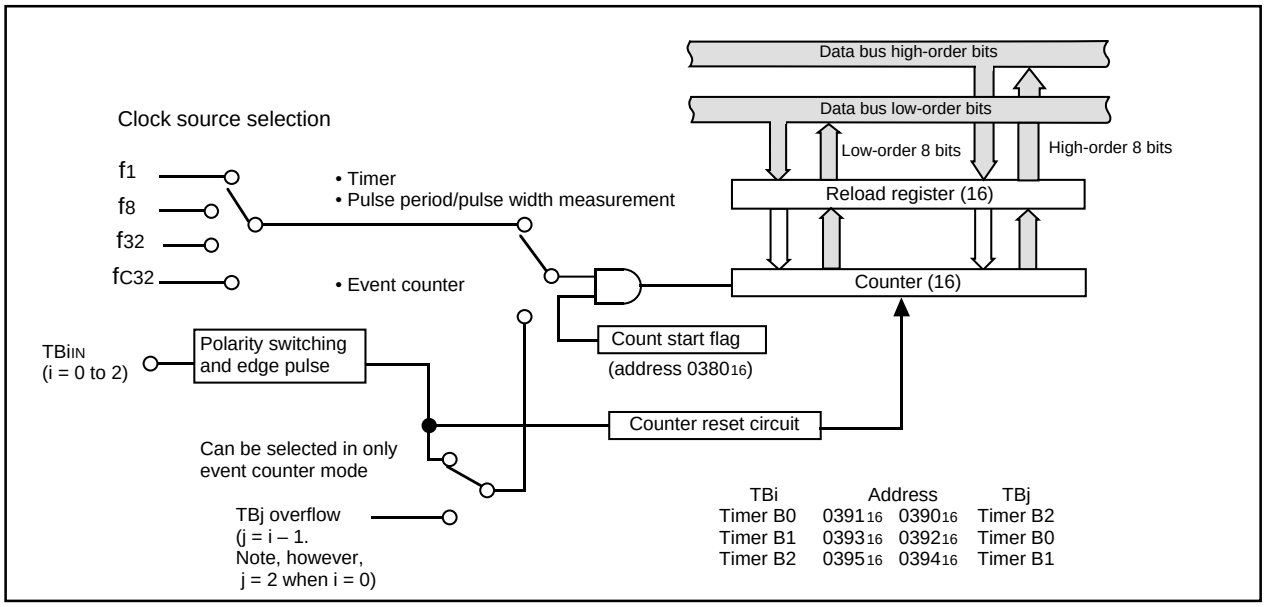

Figure 2.10.16 Block diagram of timer B

Timer Bi mode register

Symbol	Address	When reset
TBiMR(i = 0 to 2)	039B16 to 039D16	00?X0000₂

b7 b6 b5 b4 b3 b2 b1 b0

Bit symbol	Bit name	Function	R	W
TMOD0	Operation mode select bit	b1 b0 0 0 : Timer mode 0 1 : Event counter mode 1 0 : Pulse period/pulse width measurement mode 1 1 : Inhibited	○	○
TMOD1			○	○
MR0	Function varies with each operation mode		○	○
MR1			○	○
MR2			○ (Note 1) × (Note 2)	○ ×
MR3			○	×
TCK0	Count source select bit (Function varies with each operation mode)		○	○
TCK1			○	○

Notes 1: Timer B0.
2: Timer B1, timer B2.

Figure 2.10.17 Timer Bi mode register (i = 0 to 2)

Timer Bi register (Note)

Symbol	Address	When reset
TB0	039_{16}, 039_{16}	Indeterminate
TB1	039_{16}, 039_{16}	Indeterminate
TB2	039_{16}, 039_{16}	Indeterminate

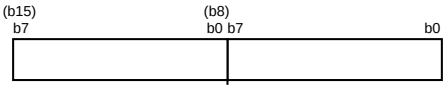

Function	Values that can be set	R	W
• Timer mode Counts the timer's period	0000_{16} to $FFFF_{16}$	○	○
• Event counter mode Counts external pulses input or a timer overflow	0000_{16} to $FFFF_{16}$	○	○
• Pulse period / pulse width measurement mode Measures a pulse period or width	——	○	×

Note: Read and write data in 16-bit units.

Figure 2.10.18 Timer Bi register (i = 0 to 2)

Count start flag

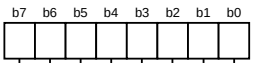

Symbol	Address	When reset
TABSR	038_{16}	00_{16}

Bit symbol	Bit name	Function	R	W
TA0S	Timer A0 count start flag	0 : Stops counting 1 : Starts counting	○	○
TA1S	Timer A1 count start flag		○	○
TA2S	Timer A2 count start flag		○	○
TA3S	Timer A3 count start flag		○	○
TA4S	Timer A4 count start flag		○	○
TB0S	Timer B0 count start flag		○	○
TB1S	Timer B1 count start flag		○	○
TB2S	Timer B2 count start flag		○	○

Figure 2.10.19 Count start flag

Clock prescaler reset flag

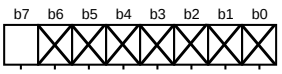

Symbol	Address	When reset
CPSRF	038_{16}	$0XXXXXXX_2$

Bit symbol	Bit name	Function	R	W
Nothing is assigned. In an attempt to write to these bits, write “0.” The value, if read, turns out to be indeterminate.			—	—
CPSR	Clock prescaler reset flag	0 : No effect 1 : Prescaler is reset (When read, the value is “0”)	○	○

Figure 2.10.20 Clock prescaler reset flag

(1) Timer mode

In this mode, the timer counts an internally generated count source. (See Table 2.10.5) Figure 2.10.21 shows the timer Bi mode register in timer mode.

Table 2.10.5 Timer specifications in timer mode

Item	Specification
Count source	f_1, f_8, f_{32}, f_{C32}
Count operation	• Counts down • When the timer underflows, it reloads the reload register contents before continuing counting
Divide ratio	1/(n+1) n : Set value
Count start condition	Count start flag is set (= 1)
Count stop condition	Count start flag is reset (= 0)
Interrupt request generation timing	The timer underflows
TBi_{IN} pin function	Programmable I/O port
Read from timer	Count value is read out by reading timer Bi register
Write to timer	• When counting stopped When a value is written to timer Bi register, it is written to both reload register and counter • When counting in progress When a value is written to timer Bi register, it is written to only reload register (Transferred to counter at next reload time)

Timer Bi mode register

b7	b6	b5	b4	b3	b2	b1	b0
						0	0

Symbol	Address	When reset
TBiMR(i=0 to 2)	$039B_{16}$ to $039D_{16}$	$00?X0000_2$

Bit symbol	Bit name	Function	R	W
TMOD0	Operation mode select bit	b1 b0 0 0 : Timer mode	○	○
TMOD1			○	○
MR0	Invalid in timer mode Can be “0” or “1”		○	○
MR1			○	○
MR2	0 (Fixed to “0” in timer mode ; i = 0)		○ (Note 1)	○
	Nothing is assigned (i = 1, 2). In an attempt to write to this bit, write “0.” The value, if read, turns out to be indeterminate.		× (Note 2)	×
MR3	Invalid in timer mode. In an attempt to write to this bit, write “0.” The value, if read in timer mode, turns out to be indeterminate.		○	×
TCK0	Count source select bit	b7 b6 0 0 : f_1 0 1 : f_8 1 0 : f_{32} 1 1 : f_{C32}	○	○
TCK1			○	○

Notes 1: Timer B0.
2: Timer B1, timer B2.

Figure 2.10.21 Timer Bi mode register in timer mode (i = 0 to 2)

(2) Event counter mode

In this mode, the timer counts an external signal or an internal timer's overflow. (See Table 2.10.6) Figure 2.10.22 shows the timer Bi mode register in event counter mode.

Table 2.10.6 Timer specifications in event counter mode

Item	Specification
Count source	• External signals input to TBiIN pin • Effective edge of count source can be a rising edge, a falling edge, or falling and rising edges as selected by software
Count operation	• Counts down • When the timer underflows, it reloads the reload register contents before continuing counting
Divide ratio	1/(n+1) n : Set value
Count start condition	Count start flag is set (= 1)
Count stop condition	Count start flag is reset (= 0)
Interrupt request generation timing	The timer underflows
TBiIN pin function	Count source input
Read from timer	Count value can be read out by reading timer Bi register
Write to timer	• When counting stopped When a value is written to timer Bi register, it is written to both reload register and counter • When counting in progress When a value is written to timer Bi register, it is written to only reload register (Transferred to counter at next reload time)

Timer Bi mode register

b7	b6	b5	b4	b3	b2	b1	b0
						0	1

Symbol	Address	When reset
TBiMR(i=0 to 2)	$039B_{16}$ to $039D_{16}$	$00?X0000_2$

Bit symbol	Bit name	Function	R	W
TMOD0	Operation mode select bit	b1 b0 0 1 : Event counter mode	○	○
TMOD1			○	○
MR0	Count polarity select bit (Note 1)	b3 b2 0 0 : Counts external signal's falling edges 0 1 : Counts external signal's rising edges 1 0 : Counts external signal's falling and rising edges 1 1 : Inhibited	○	○
MR1			○	○
MR2	0 (Fixed to "0" in event counter mode; i = 0)		○ (Note 2)	○
	Nothing is assigned (i = 1, 2). In an attempt to write to this bit, write "0." The value, if read, turns out to be indeterminate.		× (Note 3)	×
MR3	Invalid in timer mode. In an attempt to write to this bit, write "0." The value, if read in event counter mode, turns out to be indeterminate.		○	×
TCK0	Invalid in event counter mode. Can be "0" or "1".		○	○
TCK1	Event clock select	0 : Input from TBiIN pin (Note 4) 1 : TBj overflow (j = i – 1; however, j = 2 when i = 0)	○	○

Notes 1: Valid only when input from the TBiIN pin is selected as the event clock.
If timer's overflow is selected, this bit can be "0" or "1".
2: Timer B0.
3: Timer B1, timer B2.
4: Set the corresponding port direction register to "0".

Figure 2.10.22 Timer Bi mode register in event counter mode (i = 0 to 2)

(3) Pulse period/pulse width measurement mode

In this mode, the timer measures the pulse period or pulse width of an external signal. (See Table 2.10.7) Figure 2.10.23 shows the timer Bi mode register in pulse period/pulse width measurement mode. Figure 2.10.24 shows the operation timing when measuring a pulse period. Figure 2.10.25 shows the operation timing when measuring a pulse width.

Table 2.10.7 Timer specifications in pulse period/pulse width measurement mode

Item	Specification
Count source	f_1, f_8, f_{32}, f_{c32}
Count operation	• Up count • Counter value "0000_{16}" is transferred to reload register at measurement pulse's effective edge and the timer continues counting
Count start condition	Count start flag is set (= 1)
Count stop condition	Count start flag is reset (= 0)
Interrupt request generation timing	• When measurement pulse's effective edge is input (Note 1) • When an overflow occurs. (Simultaneously, the timer Bi overflow flag changes to "1". The timer Bi overflow flag changes to "0" when the count start flag is "1" and a value is written to the timer Bi mode register.)
TBi_{IN} pin function	Measurement pulse input
Read from timer	When timer Bi register is read, it indicates the reload register's content (measurement result) (Note 2)
Write to timer	Cannot be written to

Notes 1: An interrupt request is not generated when the first effective edge is input after the timer has started counting.
2: The value read out from the timer Bi register is indeterminate until the second effective edge is input after the timer.

Timer Bi mode register

b7	b6	b5	b4	b3	b2	b1	b0
						1	0

Symbol	Address	When reset
TBiMR(i=0 to 2)	$039B_{16}$ to $039D_{16}$	$00?X0000_2$

Bit symbol	Bit name	Function	R	W
TMOD0	Operation mode select bit	b1 b0 1 0 : Pulse period / pulse width measurement mode	○	○
TMOD1			○	○
MR0	Measurement mode select bit	b3 b2 0 0 : Pulse period measurement (Interval between measurement pulse's falling edge to falling edge) 0 1 : Pulse period measurement (Interval between measurement pulse's rising edge to rising edge) 1 0 : Pulse width measurement (Interval between measurement pulse's falling edge to rising edge, and between rising edge to falling edge) 1 1 : Inhibited	○	○
MR1			○	○
MR2	0 (Fixed to "0" in pulse period/pulse width measurement mode; i = 0)		○ (Note 2)	○
	Nothing is assigned (i = 1, 2). In an attempt to write to this bit, write "0." The value, if read, turns out to be indeterminate.		× (Note 3)	×
MR3	Timer Bi overflow flag (Note 1)	0 : Timer did not overflow 1 : Timer has overflowed	○	×
TCK0	Count source select bit	b7 b6 0 0 : f_1 0 1 : f_8 1 0 : f_{32} 1 1 : f_{c32}	○	○
TCK1			○	○

Notes 1: The timer Bi overflow flag changes to "0" when the count start flag is "1" and a value is written to the timer Bi mode register. This flag cannot be set to "1" by software.
2: Timer B0.
3: Timer B1, timer B2.

Figure 2.10.23 Timer Bi mode register in pulse period/pulse width measurement mode (i = 0 to 2)

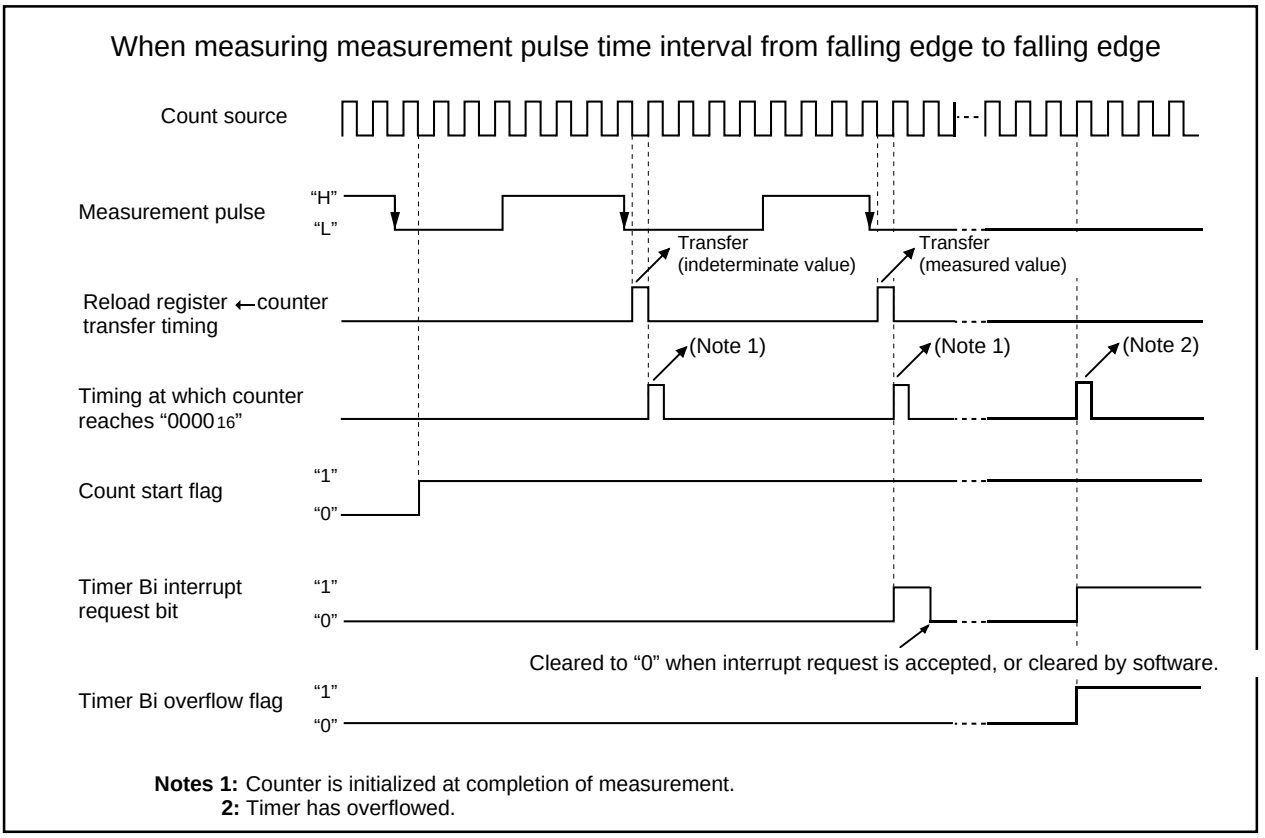

Figure 2.10.24 Operation timing when measuring a pulse period

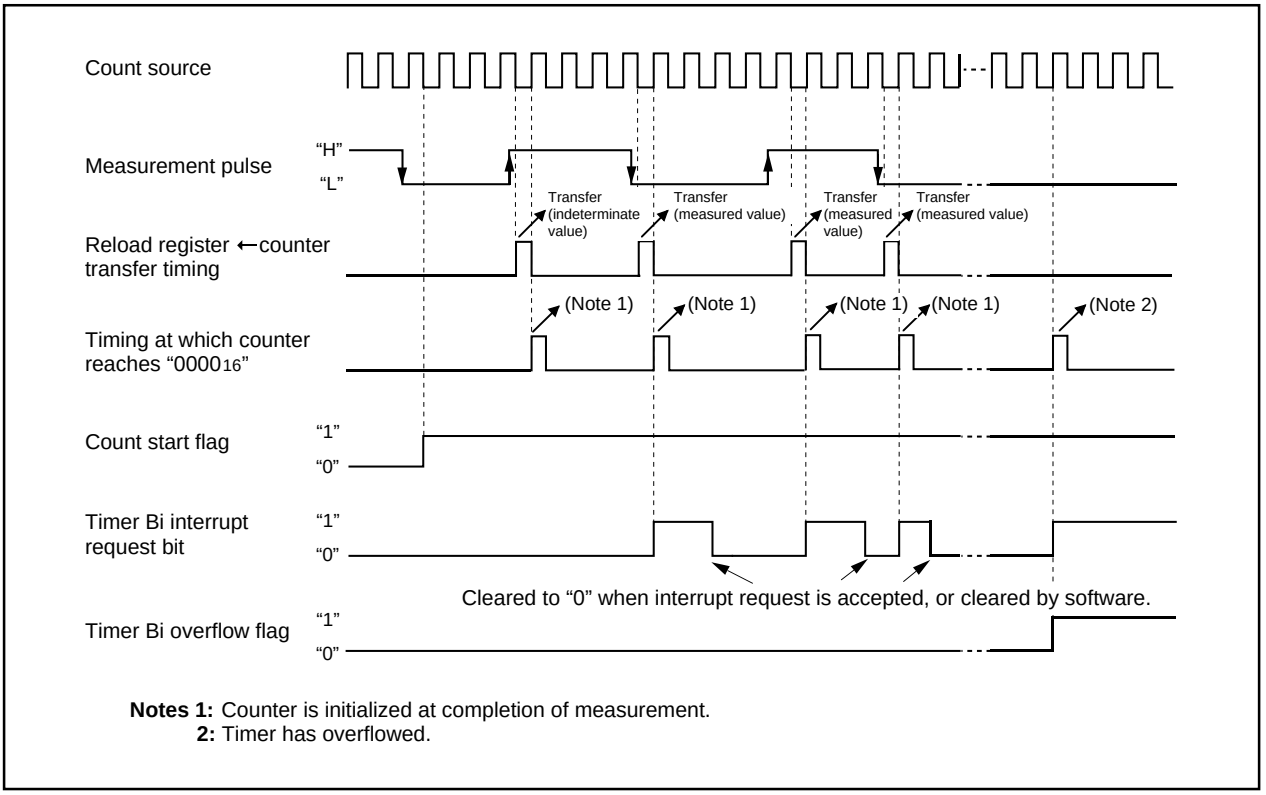

Figure 2.10.25 Operation timing when measuring a pulse width

Reserved register i

b7	b6	b5	b4	b3	b2	b1	b0
0	0	0	0	0	0	0	0

Symbol	Address	When reset
INVC0	0348_{16}	00000000_2
INVC1	0340_{16}	$000?????_2$
INVC2	$03A8_{16}$	00000000_2
INVC5	0376_{16}	00000000_2

Bit symbol	Bit name	Description	R	W
Reserved bits		Must always be set to “0”	○	○

Figure 2.10.26 Reserved register i (i = 0 to 2, 5)

Reserved register i

b7	b6	b5	b4	b3	b2	b1	b0
0	1	0	0	0	0	0	0

Symbol	Address	When reset
INVC3	0362_{16}	40_{16}
INVC4	0366_{16}	40_{16}

Bit symbol	Bit name	Description	R	W
Reserved bits		Must always be set to “0”	○	○
Reserved bit		Must always be set to “1”	○	○
Reserved bits		Must always be set to “0”	○	○

Note: Set data to this register after setting bit 2 of the protect register (address $000A_{16}$) to “1.”

Figure 2.10.27 Reserved register i (i = 3 and 4)

(4) TB0IN noise filter

The input signal of pin TB0IN has the noise filter. The ON/OFF of noise filter and selection of filter clock are set by bits 2 to 4 of the peripheral mode register.

Note: When using the noise filter, set bit 7 of the peripheral mode register according to the main clock frequency.

Peripheral mode register

b7	b6	b5	b4	b3	b2	b1	b0
	X	X					

Symbol	Address	When reset
PM	$027D_{16}$	$0XX0000_2$

Bit symbol	Bit name	Function	R	W
BSEL0	I^2C-BUS interface port selection bits	b1 b0 0 0 : None 0 1 : SCL1, SDA1 1 0 : SCL2, SDA2 1 1 : SCL1 and SDA1, SCL2 and SDA2	○	○
BSEL1			○	○
WSEL0	Clock selection bits of TB0IN noise filter (Note)	b3 b2 0 0 : 0.25 μs (removed bus width: max 0.75 μs) 0 1 : 8 μs (removed bus width: max 24 μs) 1 0 : 16 μs (removed bus width: max 48 μs) 1 1 : 32 μs (removed bus width: max 96 μs)	○	○
WSEL1			○	○
NFON	ON/OFF selection bit of TB0IN pin noise filter	0 : Noise filter OFF 1 : Noise filter ON	○	○
Nothing is assigned. In an attempt to write to this bit, write "0." The value, if read, turns out to be indeterminate.			—	—
SSCK	Main clock frequency selection bit	0 : f(XIN) = 10 MHz 1 : f(XIN) = 16 MHz	○	○

Note: The operation of MCU is not guaranteed when f(XIN) = 16 MHz.

Figure 2.10.28 Peripheral mode register

2.11 Serial I/O

Serial I/O is configured as 4 unites: UART0, UART2, multi-master I^2C-BUS interface 0, and multi-master I^2C-BUS interface 1.

2.11.1 UART0 and UART2

UART0 and UART2 each have an exclusive timer to generate a transfer clock, so they operate independently of each other.

Figure 2.11.1 shows the block diagram of UART0 and UART2. Figures 2.11.2 and 2.11.3 show the block diagram of the transmit/receive unit.

UARTi (i = 0 and 2) has two operation modes: a clock synchronous serial I/O mode and a clock asynchronous serial I/O mode (UART mode). The contents of the serial I/O mode select bits (bits 0 to 2 at addresses $03A0_{16}$ and 0378_{16}) determine whether UARTi is used as a clock synchronous serial I/O or as a UART. Although a few functions are different, UART0 and UART2 have almost the same functions.

UART0 and UART2 are almost equal in their functions with minor exceptions. UART2, in particular, is compliant with the SIM interface. It also has the bus collision detection function that generates an interrupt request if the TxD pin and the RxD pin are different in level.

Table 2.11.1 shows the comparison of functions of UART0 and UART2, and Figures 2.11.4 to 2.11.14 show the registers related to UARTi.

Table 2.11.1 Comparison of functions of UART0 and UART2

Function	UART0	UART2
CLK polarity selection	Possible (Note 1)	Possible (Note 1)
LSB first / MSB first selection	Possible (Note 1)	Possible (Note 2)
Continuous receive mode selection	Possible (Note 1)	Possible (Note 1)
Transfer clock output from multiple pins selection	Impossible	Impossible
Serial data logic switch	Impossible	Possible (Note 4)
Sleep mode selection	Possible (Note 3)	Impossible
TxD, RxD I/O polarity switch	Impossible	Possible
TxD, RxD port output format	CMOS output	N-channel open-drain output
Parity error signal output	Impossible	Possible (Note 4)
Bus collision detection	Impossible	Possible

Notes 1: Only when clock synchronous serial I/O mode.
2: Only when clock synchronous serial I/O mode and 8-bit UART mode.
3: Only when UART mode.
4: Using for SIM interface.

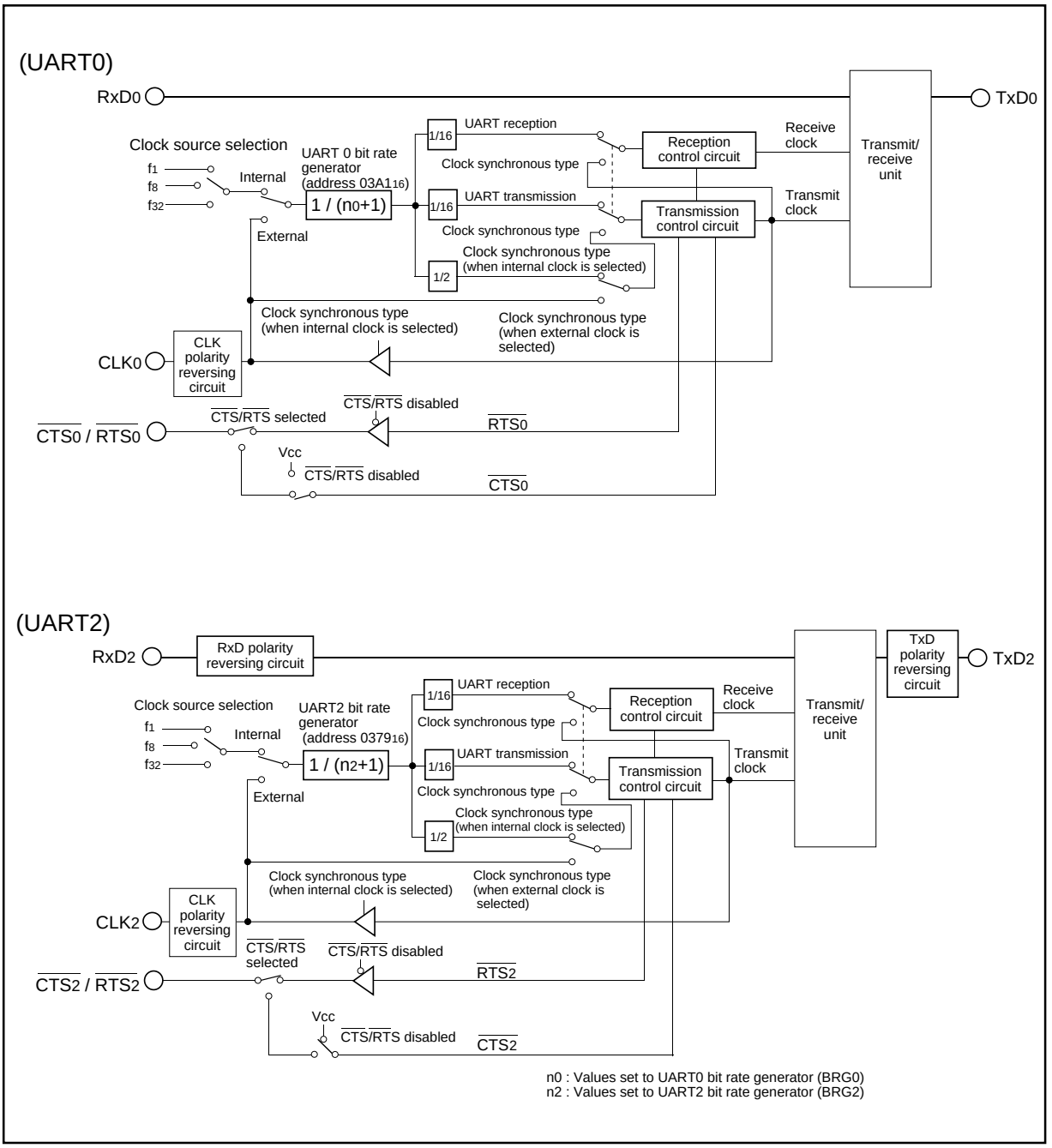

Figure 2.11.1 Block diagram of UARTi (i = 0 and 2)

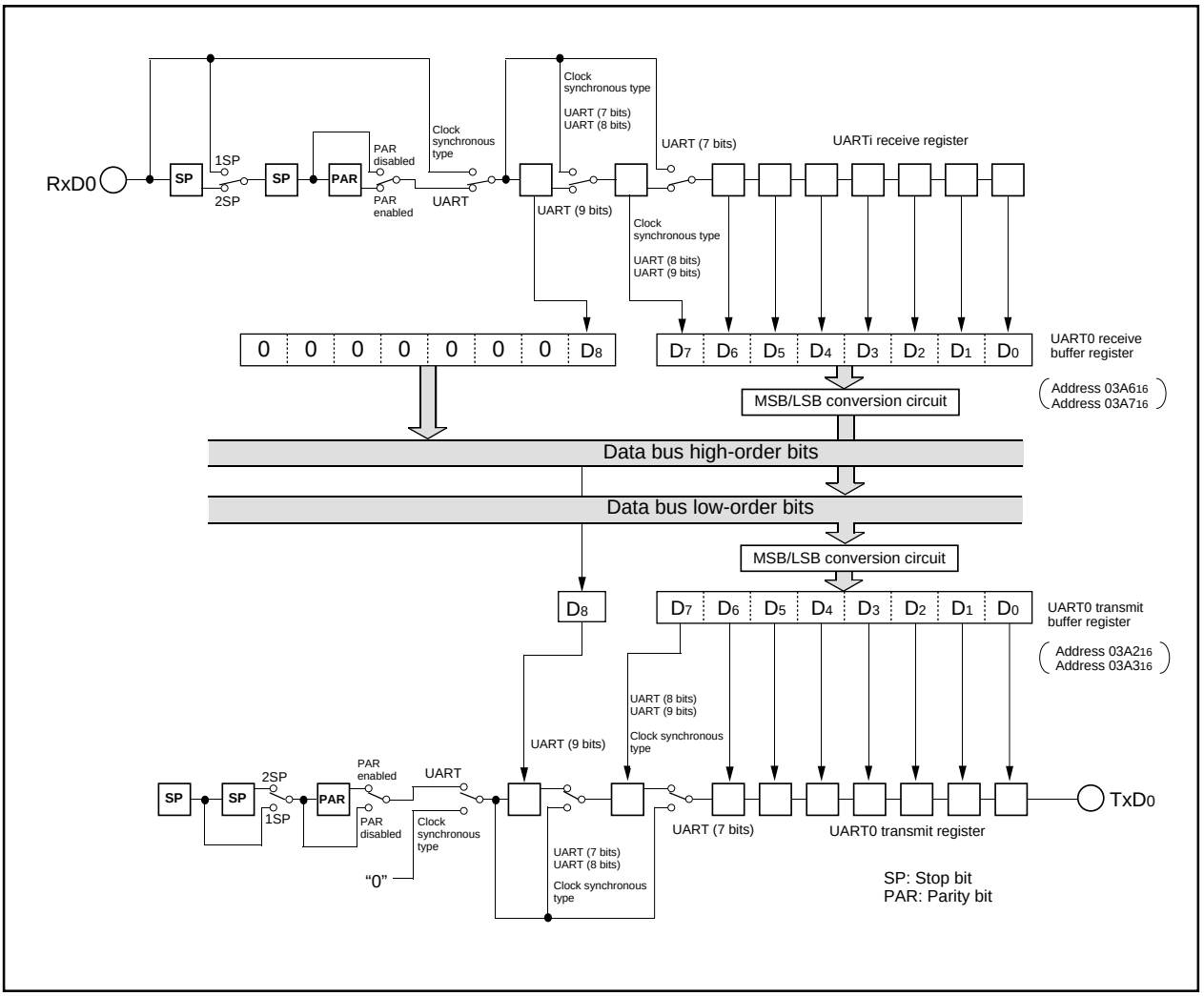

Figure 2.11.2 Block diagram of UART0 transmit/receive unit

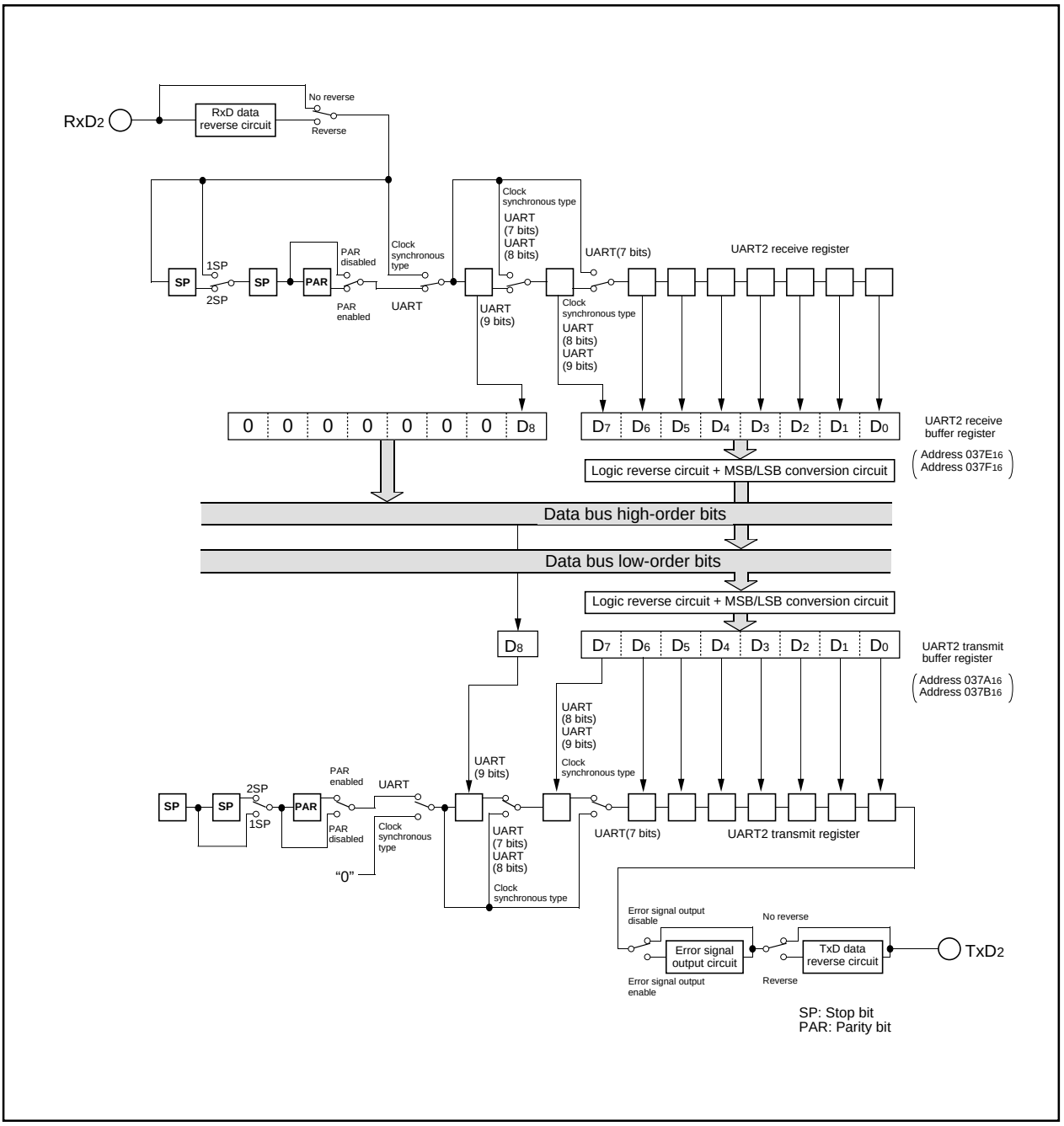

Figure 2.11.3 Block diagram of UART2 transmit/receive unit

UARTi transmit buffer register

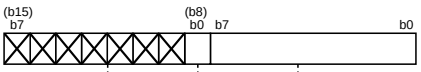

Symbol	Address	When reset
U0TB	$03A3_{16}$, $03A2_{16}$	Indeterminate
U2TB	$037B_{16}$, $037A_{16}$	Indeterminate

Function	R	W
Transmit data (Note)	×	○
Nothing is assigned. In an attempt to write to these bits, write "0." The value, if read, turns out to be indeterminate.	–	–

Figure 2.11.4 UARTi transmit buffer register (i = 0 and 2)

UARTi receive buffer register

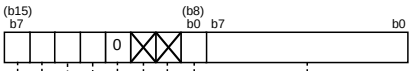

Symbol	Address	When reset
U0RB	$03A7_{16}$, $03A6_{16}$	Indeterminate
U2RB	$037F_{16}$, $037E_{16}$	Indeterminate

Bit symbol	Bit name	Function (During clock synchronous serial I/O mode)	Function (During UART mode)	R	W
—	———	Receive data	Receive data	○	×
Nothing is assigned. In an attempt to write to these bits, write "0." The value, if read, turns out to be "0."				–	–
Reserved bit		Must always be set to "0"	Must always be set to "0"	○	○
OER	Overrun error flag (Note 1)	0 : No overrun error 1 : Overrun error found	0 : No overrun error 1 : Overrun error found	○	×
FER	Framing error flag (Note 1)	Invalid	0 : No framing error 1 : Framing error found	○	×
PER	Parity error flag (Note 1)	Invalid	0 : No parity error 1 : Parity error found	○	×
SUM	Error sum flag (Note 1)	Invalid	0 : No error 1 : Error found	○	×

Notes 1: Bits 15 through 12 are set to "0" when the serial I/O mode select bit (bits 2 to 0 at addresses $03A0_{16}$ and 0378_{16}) are set to "000_2" or the receive enable bit is set to "0".
(Bit 15 is set to "0" when bits 14 to 12 all are set to "0.") Bits 14 and 13 are also set to "0" when the lower byte of the UARTi receive buffer register (addresses $03A6_{16}$ and $037E_{16}$) is read out.

2: The arbtration lost detecting flag is assigned to U2RB and is written only "0." Nothing is assinged to bit 11 of U0RB. This bit can neither be set nor reset, when read, he the value is "0."

Figure 2.11.5 UARTi receive buffer register (i = 0 and 2)

UARTi bit rate generator

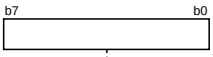

Symbol	Address	When reset
U0BRG	$03A1_{16}$	Indeterminate
U2BRG	0379_{16}	Indeterminate

Function	Values that can be set	R	W
Assuming that set value = n, BRGi divides the count source by n + 1	00_{16} to FF_{16}	×	○

Figure 2.11.6 UARTi bit rate generator (i = 0 and 2)

UART0 transmit/receive mode register

b7	b6	b5	b4	b3	b2	b1	b0

Symbol	Address	When reset
U0MR	$03A0_{16}$	00_{16}

Bit symbol	Bit name	Function (During clock synchronous serial I/O mode)	Function (During UART mode)	R	W
SMD0	Serial I/O mode select bit	Must be fixed to 001 b2 b1 b0 0 0 0 : Serial I/O invalid 0 1 0 : Inhibited 0 1 1 : Inhibited 1 1 1 : Inhibited	b2 b1 b0 1 0 0 : Transfer data 7 bits long 1 0 1 : Transfer data 8 bits long 1 1 0 : Transfer data 9 bits long 0 0 0 : Serial I/O invalid 0 1 0 : Inhibited 0 1 1 : Inhibited 1 1 1 : Inhibited	○	○
SMD1				○	○
SMD2				○	○
CKDIR	Internal/external clock select bit	0 : Internal clock 1 : External clock	0 : Internal clock 1 : External clock	○	○
STPS	Stop bit length select bit	Invalid	0 : One stop bit 1 : Two stop bits	○	○
PRY	Odd/even parity select bit	Invalid	Valid when bit 6 = “1” 0 : Odd parity 1 : Even parity	○	○
PRYE	Parity enable bit	Invalid	0 : Parity disabled 1 : Parity enabled	○	○
SLEP	Sleep select bit	Must always be set to “0”	0 : Sleep mode deselected 1 : Sleep mode selected	○	○

Figure 2.11.7 UART0 transmit/receive mode register

UART2 transmit/receive mode register

b7	b6	b5	b4	b3	b2	b1	b0

Symbol	Address	When reset
U2MR	0378_{16}	00_{16}

Bit symbol	Bit name	Function (During clock synchronous serial I/O mode)	Function (During UART mode)	R	W
SMD0	Serial I/O mode select bit	Must be fixed to 001 b2 b1 b0 0 0 0 : Serial I/O invalid 0 1 0 : Inhibited 0 1 1 : Inhibited 1 1 1 : Inhibited	b2 b1 b0 1 0 0 : Transfer data 7 bits long 1 0 1 : Transfer data 8 bits long 1 1 0 : Transfer data 9 bits long 0 0 0 : Serial I/O invalid 0 1 0 : Inhibited 0 1 1 : Inhibited 1 1 1 : Inhibited	○	○
SMD1				○	○
SMD2				○	○
CKDIR	Internal/external clock select bit	0 : Internal clock 1 : External clock	0 : Internal clock 1 : External clock	○	○
STPS	Stop bit length select bit	Invalid	0 : One stop bit 1 : Two stop bits	○	○
PRY	Odd/even parity select bit	Invalid	Valid when bit 6 = “1” 0 : Odd parity 1 : Even parity	○	○
PRYE	Parity enable bit	Invalid	0 : Parity disabled 1 : Parity enabled	○	○
IOPOL	TxD, RxD I/O polarity reverse bit	0 : No reverse 1 : Reverse Usually set to “0”	0 : No reverse 1 : Reverse Usually set to “0”	○	○

Figure 2.11.8 UART2 transmit/receive mode register

UART0 transmit/receive control register 0

b7	b6	b5	b4	b3	b2	b1	b0

Symbol	Address	When reset
U0C0	$03A4_{16}$	08_{16}

Bit symbol	Bit name	Function (During clock synchronous serial I/O mode)	Function (During UART mode)	R	W
CLK0	BRG count source select bit	b1 b0 0 0 : f_1 is selected 0 1 : f_8 is selected 1 0 : f_{32} is selected 1 1 : Inhibited	b1 b0 0 0 : f_1 is selected 0 1 : f_8 is selected 1 0 : f_{32} is selected 1 1 : Inhibited	○	○
CLK1				○	○
CRS	$\overline{CTS}/\overline{RTS}$ function select bit	Valid when bit 4 = "0" 0 : $\overline{CTS}$ function is selected (Note 1) 1 : $\overline{RTS}$ function is selected (Note 2)	Valid when bit 4 = "0" 0 : $\overline{CTS}$ function is selected (Note 1) 1 : $\overline{RTS}$ function is selected (Note 2)	○	○
TXEPT	Transmit register empty flag	0 : Data present in transmit register (during transmission) 1 : No data present in transmit register (transmission completed)	0 : Data present in transmit register (during transmission) 1 : No data present in transmit register (transmission completed)	○	×
CRD	$\overline{CTS}/\overline{RTS}$ disable bit	0 : $\overline{CTS}/\overline{RTS}$ function enabled 1 : $\overline{CTS}/\overline{RTS}$ function disabled ($P6_0$ functions as programmable I/O port)	0 : $\overline{CTS}/\overline{RTS}$ function enabled 1 : $\overline{CTS}/\overline{RTS}$ function disabled ($P6_0$ functions as programmable I/O port)	○	○
NCH	Data output select bit	0 : TXDi pin is CMOS output 1 : TXDi pin is N-channel open-drain output	0: TXDi pin is CMOS output 1: TXDi pin is N-channel open-drain output	○	○
CKPOL	CLK polarity select bit	0 : Transmit data is output at falling edge of transfer clock and receive data is input at rising edge 1 : Transmit data is output at rising edge of transfer clock and receive data is input at falling edge	Must always be set to "0"	○	○
UFORM	Transfer format select bit	0 : LSB first 1 : MSB first	Must always be set to "0"	○	○

Notes 1: Set the corresponding port direction register to "0".
2: The settings of the corresponding port register and port direction register are invalid.

Figure 2.11.9 UART0 transmit/receive control register 0

UART2 transmit/receive control register 0

b7	b6	b5	b4	b3	b2	b1	b0
		X					

Symbol	Address	When reset
U2C0	$037C_{16}$	08_{16}

Bit symbol	Bit name	Function (During clock synchronous serial I/O mode)	Function (During UART mode)	R	W
CLK0	BRG count source select bit	b1 b0 0 0 : f_1 is selected 0 1 : f_8 is selected 1 0 : f_{32} is selected 1 1 : Inhibited	b1 b0 0 0 : f_1 is selected 0 1 : f_8 is selected 1 0 : f_{32} is selected 1 1 : Inhibited	○	○
CLK1				○	○
CRS	$\overline{CTS}/\overline{RTS}$ function select bit	Valid when bit 4 = "0" 0 : $\overline{CTS}$ function is selected (Note 1) 1 : $\overline{RTS}$ function is selected (Note 2)	Valid when bit 4 = "0" 0 : $\overline{CTS}$ function is selected (Note 1) 1 : $\overline{RTS}$ function is selected (Note 2)	○	○
TXEPT	Transmit register empty flag	0 : Data present in transmit register (during transmission) 1 : No data present in transmit register (transmission completed)	0 : Data present in transmit register (during transmission) 1 : No data present in transmit register (transmission completed)	○	×
CRD	$\overline{CTS}/\overline{RTS}$ disable bit	0 : $\overline{CTS}/\overline{RTS}$ function enabled 1 : $\overline{CTS}/\overline{RTS}$ function disabled ($P7_3$ functions programmable I/O port)	0 : $\overline{CTS}/\overline{RTS}$ function enabled 1 : $\overline{CTS}/\overline{RTS}$ function disabled ($P7_3$ functions programmable I/O port)	○	○
Nothing is assigned. In an attempt to write to this bit, write "0." The value, if read, turns out to be "0."				—	—
CKPOL	CLK polarity select bit	0 : Transmit data is output at falling edge of transfer clock and receive data is input at rising edge 1 : Transmit data is output at rising edge of transfer clock and receive data is input at falling edge	Must always be set to "0"	○	○
UFORM	Transfer format select bit (Note 3)	0 : LSB first 1 : MSB first	0 : LSB first 1 : MSB first	○	○

Notes 1: Set the corresponding port direction register to "0".
2: The settings of the corresponding port register and port direction register are invalid.
3: Only clock synchronous serial I/O mode and 8-bit UART mode are valid.

Figure 2.11.10 UART2 transmit/receive control register 0

UART0 transmit/receive control register 1

b7	b6	b5	b4	b3	b2	b1	b0
✕	✕	✕	✕				

Symbol	Address	When reset
U0C1	$03A5_{16}$	02_{16}

Bit symbol	Bit name	Function (During clock synchronous serial I/O mode)	Function (During UART mode)	R	W
TE	Transmit enable bit	0 : Transmission disabled 1 : Transmission enabled	0 : Transmission disabled 1 : Transmission enabled	○	○
TI	Transmit buffer empty flag	0 : Data present in transmit buffer register 1 : No data present in transmit buffer register	0 : Data present in transmit buffer register 1 : No data present in transmit buffer register	○	✕
RE	Receive enable bit	0 : Reception disabled 1 : Reception enabled	0 : Reception disabled 1 : Reception enabled	○	○
RI	Receive complete flag	0 : No data present in receive buffer register 1 : Data present in receive buffer register	0 : No data present in receive buffer register 1 : Data present in receive buffer register	○	✕
Nothing is assigned. In an attempt to write to these bits, write “0.” The value, if read, turns out to be “0.”				—	—

Figure 2.11.11 UART0 transmit/receive control register 1

UART2 transmit/receive control register 1

b7	b6	b5	b4	b3	b2	b1	b0

Symbol	Address	When reset
U2C1	$037D_{16}$	02_{16}

Bit symbol	Bit name	Function (During clock synchronous serial I/O mode)	Function (During UART mode)	R	W
TE	Transmit enable bit	0 : Transmission disabled 1 : Transmission enabled	0 : Transmission disabled 1 : Transmission enabled	○	○
TI	Transmit buffer empty flag	0 : Data present in transmit buffer register 1 : No data present in transmit buffer register	0 : Data present in transmit buffer register 1 : No data present in transmit buffer register	○	✕
RE	Receive enable bit	0 : Reception disabled 1 : Reception enabled	0 : Reception disabled 1 : Reception enabled	○	○
RI	Receive complete flag	0 : No data present in receive buffer register 1 : Data present in receive buffer register	0 : No data present in receive buffer register 1 : Data present in receive buffer register	○	✕
U2IRS	UART2 transmit interrupt cause select bit	0 : Transmit buffer empty (TI = 1) 1 : Transmit is completed (TXEPT = 1)	0 : Transmit buffer empty (TI = 1) 1 : Transmit is completed (TXEPT = 1)	○	○
U2RRM	UART2 continuous receive mode enable bit	0 : Continuous receive mode disabled 1 : Continuous receive mode enabled	Invalid	○	○
U2LCH	Data logic select bit	0 : No reverse 1 : Reverse	0 : No reverse 1 : Reverse	○	○
U2ERE	Error signal output enable bit	Must always be set to “0”	0 : Output disabled 1 : Output enabled	○	○

Figure 2.11.12 UART2 transmit/receive control register 1

UART transmit/receive control register 2

b7	b6	b5	b4	b3	b2	b1	b0
X	0	0	0	0		0	

Symbol	Address	When reset
UCON	$03B0_{16}$	$X0000000_2$

Bit symbol	Bit name	Function (During clock synchronous serial I/O mode)	Function (During UART mode)	R	W
U0IRS	UART0 transmit interrupt cause select bit	0 : Transmit buffer empty (TI = 1) 1 : Transmission completed (TXEPT = 1)	0 : Transmit buffer empty (TI = 1) 1 : Transmission completed (TXEPT = 1)	○	○
Reserved bit		Must always be set to "0"	Must always be set to "0"	○	○
U0RRM	UART0 continuous receive mode select bit	0 : Continuous receive mode disabled 0 : Continuous receive mode enable	Invalid	○	○
Reserved bits		Must always be set to "0"	Must always be set to "0"	○	○
Nothing is assigned. In an attempt to write to this bit, write "0." The value, if read, turns out to be "0."					

Figure 2.11.13 UART transmit/receive control register 2

UART2 special mode register

b7	b6	b5	b4	b3	b2	b1	b0
0			0	0	0	0	0

Symbol	Address	When reset
U2SMR	0377_{16}	00_{16}

Bit symbol	Bit name	Function (During clock synchronous serial I/O mode)	Function (During UART mode)	R	W
Reserved bits		Must always be set to "0"	Must always be set to "0"	—	○
ACSE	Auto clear function select bit of transmit enable bit	Must always be set to "0"	0 : No auto clear function 1 : Auto clear at occurrence of bus collision	○	○
SSS	Transmit start condition select bit	Must always be set to "0"	0 : Ordinary 1 : Falling edge of RxD2	○	○
Reserved bit		Must always be set to "0"	Must always be set to "0"	—	○

Figure 2.11.14 UART2 special mode register

2.11.2 Clock Synchronous Serial I/O Mode

The clock synchronous serial I/O mode uses a transfer clock to transmit and receive data. Tables 2.11.2 and 2.11.3 list the specifications of the clock synchronous serial I/O mode. Figures 2.11.15 and 2.11.16 show the UARTi transmit/receive mode register in clock synchronous serial I/O mode.

Table 2.11.2 Specifications of clock synchronous serial I/O mode (1)

Item	Specification
Transfer data format	• Transfer data length: 8 bits
Transfer clock	• When internal clock is selected (bit 3 at addresses $03A0_{16}$, 0378_{16} = "0") : fi/ 2(n+1) (Note 1) fi = f_1, f_8, f_{32} • When external clock is selected (bit 3 at addresses $03A0_{16}$, 0378_{16} = "1") : Input from CLKi pin
Transmission/reception control	• $\overline{CTS}$ function/$\overline{RTS}$ function/$\overline{CTS}$, $\overline{RTS}$ function chosen to be invalid
Transmission start condition	• To start transmission, the following requirements must be met: – Transmit enable bit (bit 0 at addresses $03A5_{16}$, $037D_{16}$) = "1" – Transmit buffer empty flag (bit 1 at addresses $03A5_{16}$, $037D_{16}$) = "0" – When $\overline{CTS}$ function selected, $\overline{CTS}$ input level = "L" • Furthermore, if external clock is selected, the following requirements must also be met: – CLKi polarity select bit (bit 6 at addresses $03A4_{16}$, $037C_{16}$) = "0": CLKi input level = "H" – CLKi polarity select bit (bit 6 at addresses $03A4_{16}$, $037C_{16}$) = "1": CLKi input level = "L"
Reception start condition	• To start reception, the following requirements must be met: – Receive enable bit (bit 2 at addresses $03A5_{16}$, $037D_{16}$) = "1" – Transmit enable bit (bit 0 at addresses $03A5_{16}$, $037D_{16}$) = "1" – Transmit buffer empty flag (bit 1 at addresses $03A5_{16}$, $037D_{16}$) = "0" • Furthermore, if external clock is selected, the following requirements must also be met: – CLKi polarity select bit (bit 6 at addresses $03A4_{16}$, $037C_{16}$) = "0": CLKi input level = "H" – CLKi polarity select bit (bit 6 at addresses $03A4_{16}$, $037C_{16}$) = "1": CLKi input level = "L"
Interrupt request generation timing	• When transmitting – Transmit interrupt cause select bit (bit 0 at address $03B0_{16}$, bit 4 at address $037D_{16}$) = "0": Interrupts requested when data transfer from UARTi transfer buffer register to UARTi transmit register is completed – Transmit interrupt cause select bit (bit 0 at address $03B0_{16}$, bit 4 at address $037D_{16}$) = "1": Interrupts requested when data transmission from UARTi transfer register is completed • When receiving – Interrupts requested when data transfer from UARTi receive register to UARTi receive buffer register is completed
Error detection	• Overrun error (Note 2) This error occurs when the next data is ready before contents of UARTi receive buffer register are read out

Table 2.11.3 Specifications of clock synchronous serial I/O mode (2)

Item	Specification
Select function	• CLK polarity selection Whether transmit data is output/input at the rising edge or falling edge of the transfer clock can be selected • LSB first/MSB first selection Whether transmission/reception begins with bit 0 or bit 7 can be selected • Continuous receive mode selection Reception is enabled simultaneously by a read from the receive buffer register • Switching serial data logic (UART2) Whether to reverse data in writing to the transmission buffer register or reading the reception buffer register can be selected. • TxD, RxD I/O polarity reverse (UART2) This function is reversing TxD port output and RxD port input. All I/O data level is reversed.

Notes 1: “n” denotes the value 00_{16} to FF_{16} that is set to the UART bit rate generator.

2: If an overrun error occurs, the UARTi receive buffer will have the next data written in. Note also that the UARTi receive interrupt request bit is not set to “1”.

UART0 transmit/receive mode register

b7	b6	b5	b4	b3	b2	b1	b0
0					0	0	1

Symbol	Address	When reset
U0MR	$03A0_{16}$	00_{16}

Bit symbol	Bit name	Function	R	W
SMD0	Serial I/O mode select bit	b2 b1 b0 0 0 1 : Clock synchronous serial I/O mode	○	○
SMD1			○	○
SMD2			○	○
CKDIR	Internal/external clock select bit	0 : Internal clock 1 : External clock	○	○
STPS	Invalid in clock synchronous serial I/O mode		○	○
PRY			○	○
PRYE			○	○
SLEP	0 (Must always be set to “0” in clock synchronous serial I/O mode)		○	○

Figure 2.11.15 UART0 transmit/receive mode registers in clock synchronous serial I/O mode

UART2 transmit/receive mode register

b7	b6	b5	b4	b3	b2	b1	b0
0					0	0	1

Symbol	Address	When reset
U2MR	0378_{16}	00_{16}

Bit symbol	Bit name	Function	R	W
SMD0	Serial I/O mode select bit	b2 b1 b0 0 0 1 : Clock synchronous serial I/O mode	○	○
SMD1			○	○
SMD2			○	○
CKDIR	Internal/external clock select bit	0 : Internal clock 1 : External clock	○	○
STPS	Invalid in clock synchronous serial I/O mode		○	○
PRY			○	○
PRYE			○	○
IOPOL	TxD, RxD I/O polarity reverse bit (Note)	0 : No reverse 1 : Reverse	○	○

Note: Usually set to “0”.

Figure 2.11.16 UART2 transmit/receive mode register in clock synchronous serial I/O mode

Table 2.11.4 lists the functions of the input/output pins during clock synchronous serial I/O mode. Note that for a period from when the UARTi operation mode is selected to when transfer starts, the TxDi pin outputs a “H”. (If the N-channel open-drain is selected, this pin is in floating state.)

Table 2.11.4 Input/output pin functions in clock synchronous serial I/O mode

Pin name	Function	Method of selection
TxDi ($P6_3$, $P7_0$)	Serial data output	(Outputs dummy data when performing reception only)
RxDi ($P6_2$, $P7_1$)	Serial data input	Port $P6_2$ and $P7_1$ direction register (bits 2 at address $03EE_{16}$, bit 1 at address $03EF_{16}$)= “0” (Can be used as an input port when performing transmission only)
CLKi ($P6_1$, $P7_2$)	Transfer clock output	Internal/external clock select bit (bit 3 at address $03A0_{16}$, 0378_{16}) = “0”
	Transfer clock input	Internal/external clock select bit (bit 3 at address $03A0_{16}$, 0378_{16}) = “1” Port $P6_1$ and $P7_2$ direction register (bits 1 at address $03EE_{16}$, bit 2 at address $03EF_{16}$) = “0”
$\overline{CTS}$i/$\overline{RTS}$i ($P6_0$, $P7_3$)	$\overline{CTS}$ input	$\overline{CTS}$/$\overline{RTS}$ disable bit (bit 4 at address $03A4_{16}$, $037C_{16}$) =“0” $\overline{CTS}$/$\overline{RTS}$ function select bit (bit 2 at addresses $03A4_{16}$, $037C_{16}$) = “0” Port $P6_0$ and $P7_3$ direction register (bits 0 at address $03EE_{16}$, bit 3 at address $03EF_{16}$) = “0”
	$\overline{RTS}$ output	$\overline{CTS}$/$\overline{RTS}$ disable bit (bit 4 at address $03A4_{16}$, $037C_{16}$) = “0” $\overline{CTS}$/$\overline{RTS}$ function select bit (bit 2 at address $03A4_{16}$, $037C_{16}$) = “1”
	Programmable I/O port	$\overline{CTS}$/$\overline{RTS}$ disable bit (bit 4 at address $03A4_{16}$, $037C_{16}$) = “1”

• Example of transmit timing (when internal clock is selected)

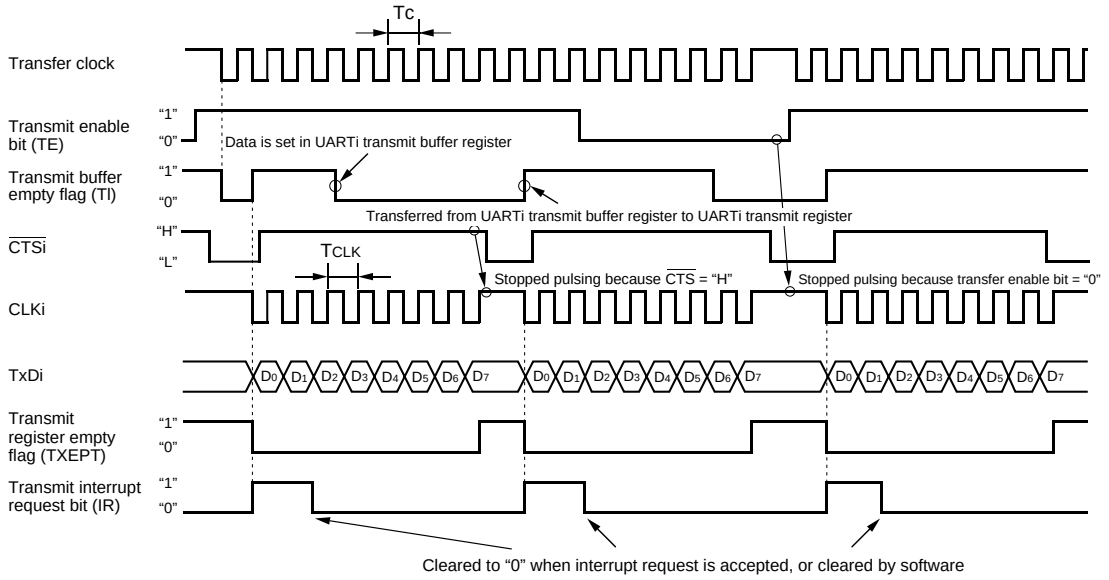

Shown in ( ) are bit symbols.

The above timing applies to the following settings:
- Internal clock is selected.
- CTS function is selected.
- CLK polarity select bit = "0".
- Transmit interrupt cause select bit = "0".

Tc = TCLK = 2(n + 1) / fi
fi: frequency of BRGi count source (f_1, f_8, f_{32})
n: value set to BRGi

• Example of receive timing (when external clock is selected)

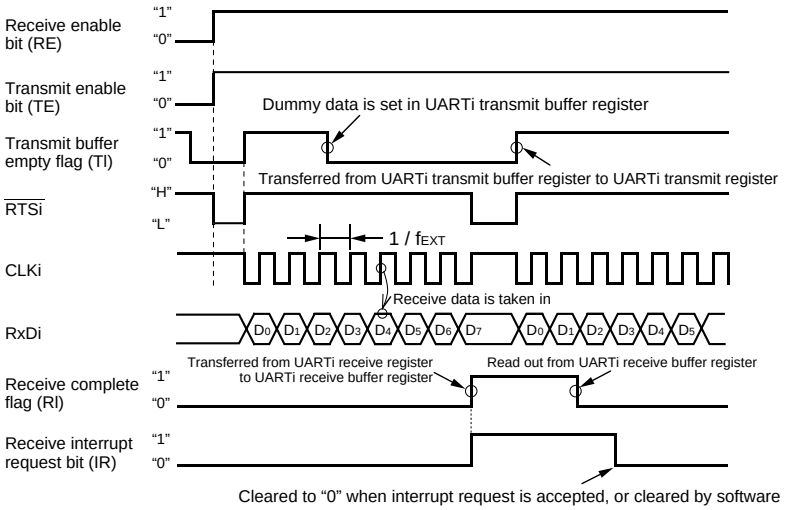

Shown in ( ) are bit symbols.

The above timing applies to the following settings:
- External clock is selected.
- RTS function is selected.
- CLK polarity select bit = "0".

f_{EXT}: frequency of external clock

Meet the following conditions are met when the CLK input before data reception = "H"
- Transmit enable bit → "1"
- Receive enable bit → "1"
- Dummy data write to UARTi transmit buffer register

Figure 2.11.17 Typical transmit/receive timings in clock synchronous serial I/O mode

(1) Polarity select function

As shown in Figure 2.11.18, the CLK polarity select bit (bit 6 at addresses 03A4$_{16}$, 037C$_{16}$) allows selection of the polarity of the transfer clock.

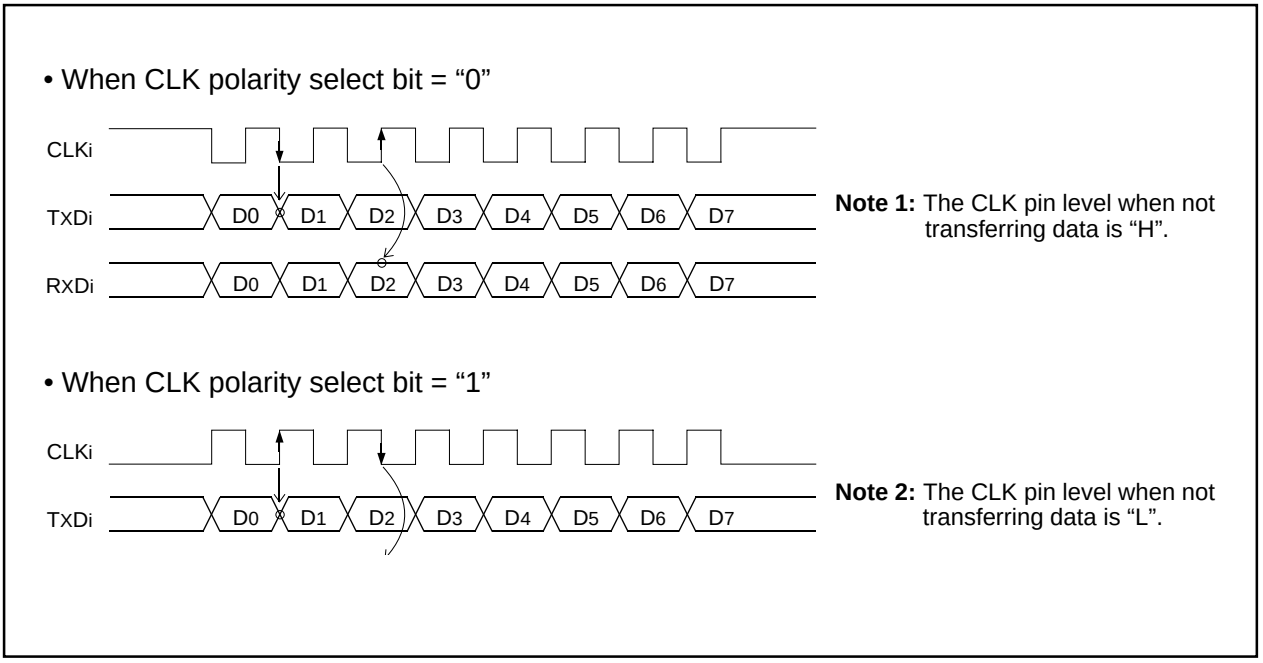

Figure 2.11.18 Polarity of transfer clock

(2) LSB first/MSB first select function

As shown in Figure 2.11.19, when the transfer format select bit (bit 7 at addresses 03A4$_{16}$, 037C$_{16}$) = “0”, the transfer format is “LSB first”; when the bit = “1”, the transfer format is “MSB first”.

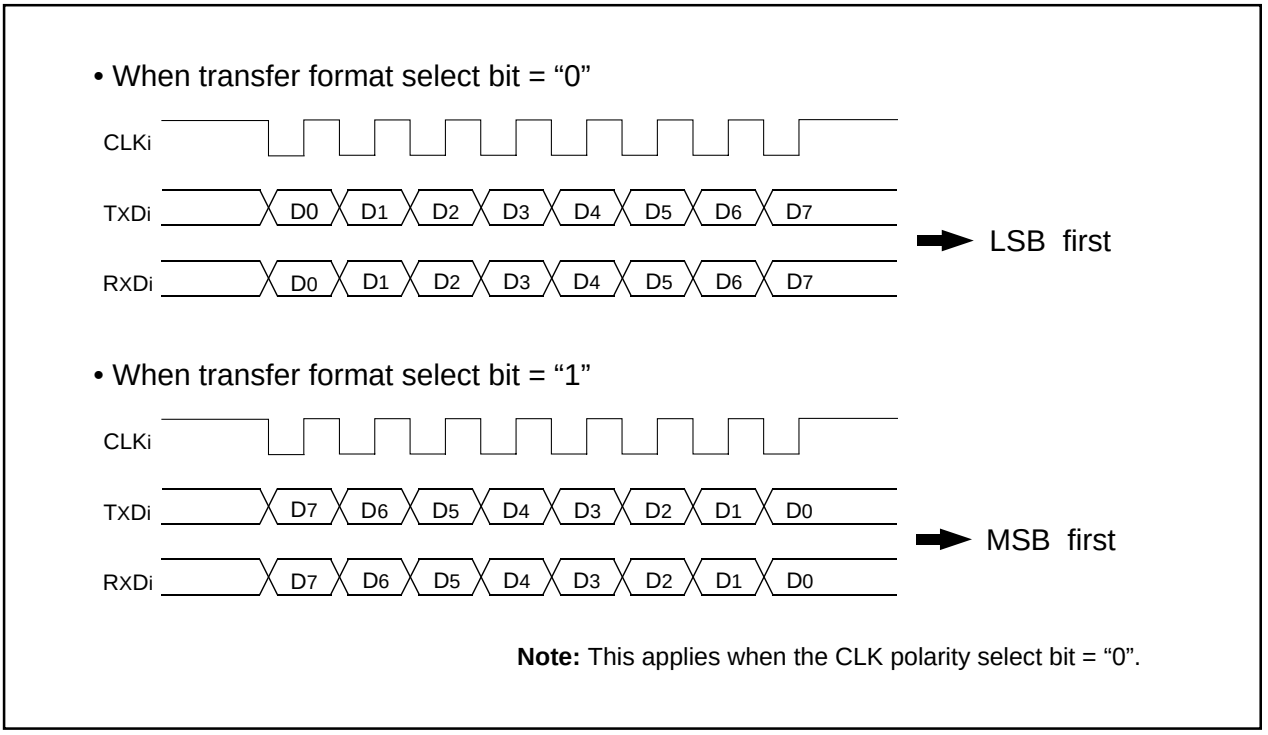

Figure 2.11.19 Transfer format

(3) Continuous receive mode

If the continuous receive mode enable bit (bits 2 at address $03B0_{16}$, bit 5 at address $037D_{16}$) is set to "1", the unit is placed in continuous receive mode. In this mode, when the receive buffer register is read out, the unit simultaneously goes to a receive enable state without having to set dummy data to the transmit buffer register back again.

(4) Serial data logic switch function (UART2)

When the data logic select bit (bit6 at address $037D_{16}$) = "1", and writing to transmit buffer register or reading from receive buffer register, data is reversed. Figure 2.11.20 shows the example of serial data logic switch timing.

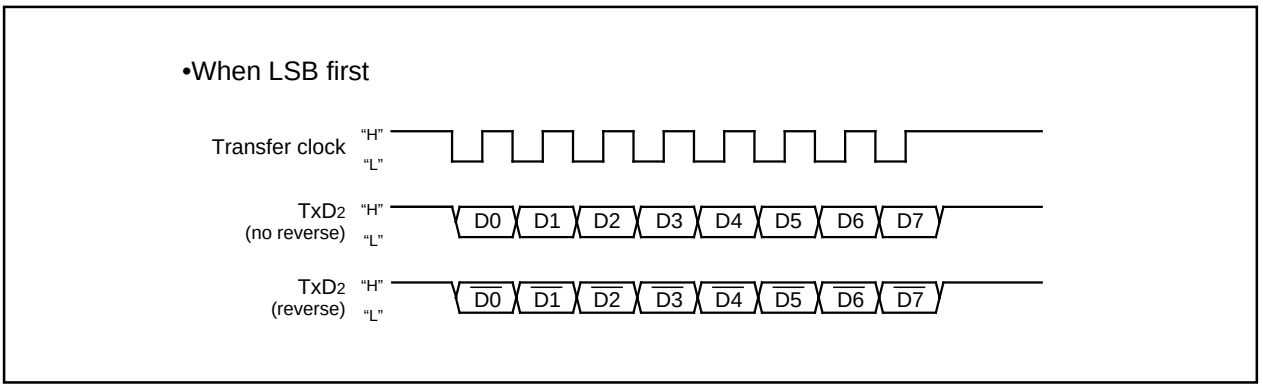

Figure 2.11.20 Serial data logic switch timing

2.11.3 Clock Asynchronous Serial I/O (UART) Mode

The UART mode allows transmitting and receiving data after setting the desired transfer rate and transfer data format. Tables 2.11.5 and 2.11.6 list the specifications of the UART mode. Figure 2.11.21 and 2.11.22 show the UARTi transmit/receive mode register in UART mode.

Table 2.11.5 Specifications of UART Mode (1)

Item	Specification
Transfer data format	• Character bit (transfer data): 7 bits, 8 bits, or 9 bits as selected • Start bit: 1 bit • Parity bit: Odd, even, or nothing as selected • Stop bit: 1 bit or 2 bits as selected
Transfer clock	• When internal clock is selected (bit 3 at addresses $03A0_{16}$, 0378_{16} = "0") : fi/16(n+1) (Note 1) fi = f_1, f_8, f_{32} • When external clock is selected (bit 3 at addresses $03A0_{16}$, 0378_{16} ="1") : f_{EXT}/16(n+1)(Note 1) (Note 2)
Transmission/reception control	• $\overline{CTS}$ function/$\overline{RTS}$ function/$\overline{CTS}$, $\overline{RTS}$ function chosen to be invalid
Transmission start condition	• To start transmission, the following requirements must be met: - Transmit enable bit (bit 0 at addresses $03A5_{16}$, $037D_{16}$) = "1" - Transmit buffer empty flag (bit 1 at addresses $03A5_{16}$, $037D_{16}$) = "0" - When $\overline{CTS}$ function selected, $\overline{CTS}$ input level = "L"
Reception start condition	• To start reception, the following requirements must be met: - Receive enable bit (bit 2 at addresses $03A5_{16}$, $037D_{16}$) = "1" - Start bit detection
Interrupt request generation timing	• When transmitting - Transmit interrupt cause select bits (bits 0 at address $03B0_{16}$, bit4 at address $037D_{16}$) = "0": Interrupts requested when data transfer from UARTi transfer buffer register to UARTi transmit register is completed - Transmit interrupt cause select bits (bits 0 at address $03B0_{16}$, bit4 at address $037D_{16}$) = "1": Interrupts requested when data transmission from UARTi transfer register is completed • When receiving - Interrupts requested when data transfer from UARTi receive register to UARTi receive buffer register is completed
Error detection	• Overrun error (Note 3) This error occurs when the next data is ready before contents of UARTi receive buffer register are read out • Framing error This error occurs when the number of stop bits set is not detected • Parity error This error occurs when if parity is enabled, the number of 1's in parity and character bits does not match the number of 1's set • Error sum flag This flag is set (= 1) when any of the overrun, framing, and parity errors is encountered

Table 2.11.6 Specifications of UART Mode (2)

Item	Specification
Select function	• Sleep mode selection (UART0) This mode is used to transfer data to and from one of multiple slave micro-computers • Serial data logic switch (UART2) This function is reversing logic value of transferring data. Start bit, parity bit and stop bit are not reversed. • TxD, RxD I/O polarity switch This function is reversing TxD port output and RxD port input. All I/O data level is reversed.

Notes 1: ‘n’ denotes the value 00_{16} to FF_{16} that is set to the UARTi bit rate generator.

2: f_{EXT} is input from the CLKi pin.

3: If an overrun error occurs, the UARTi receive buffer will have the next data written in. Note also that the UARTi receive interrupt request bit is not set to “1”.

UART0 transmit/receive mode register

b7	b6	b5	b4	b3	b2	b1	b0

Symbol	Address	When reset
U0MR	$03A0_{16}$	00_{16}

Bit symbol	Bit name	Function	R	W
SMD0	Serial I/O mode select bit	b2 b1 b0 1 0 0 : Transfer data 7 bits long 1 0 1 : Transfer data 8 bits long 1 1 0 : Transfer data 9 bits long	○	○
SMD1			○	○
SMD2			○	○
CKDIR	Internal / external clock select bit	0 : Internal clock 1 : External clock	○	○
STPS	Stop bit length select bit	0 : One stop bit 1 : Two stop bits	○	○
PRY	Odd / even parity select bit	Valid when bit 6 = “1” 0 : Odd parity 1 : Even parity	○	○
PRYE	Parity enable bit	0 : Parity disabled 1 : Parity enabled	○	○
SLEP	Sleep select bit	0 : Sleep mode deselected 1 : Sleep mode selected	○	○

Figure 2.11.21 UART0 transmit/receive mode register in UART mode

UART2 transmit/receive mode register

b7	b6	b5	b4	b3	b2	b1	b0

Symbol	Address	When reset
U2MR	0378_{16}	00_{16}

Bit symbol	Bit name	Function	R	W
SMD0	Serial I/O mode select bit	b2 b1 b0 1 0 0 : Transfer data 7 bits long 1 0 1 : Transfer data 8 bits long 1 1 0 : Transfer data 9 bits long	○	○
SMD1			○	○
SMD2			○	○
CKDIR	Internal / external clock select bit	0 : Internal clock 1 : External clock	○	○
STPS	Stop bit length select bit	0 : One stop bit 1 : Two stop bits	○	○
PRY	Odd / even parity select bit	Valid when bit 6 = “1” 0 : Odd parity 1 : Even parity	○	○
PRYE	Parity enable bit	0 : Parity disabled 1 : Parity enabled	○	○
IOPOL	TxD, RxD I/O polarity reverse bit (Note)	0 : No reverse 1 : Reverse	○	○

Note: Usually set to “0”.

Figure 2.11.22 UART2 transmit/receive mode register in UART mode

Table 2.11.7 lists the functions of the input/output pins during UART mode. Note that for a period from when the UARTi operation mode is selected to when transfer starts, the TxDi pin outputs a “H”. (If the N-channel open-drain is selected, this pin is in floating state.)

Table 2.11.7 Input/output pin functions in UART mode

Pin name	Function	Method of selection
TxDi ($P6_3$, $P7_0$)	Serial data output	
RxDi ($P6_2$, $P7_1$)	Serial data input	Port $P6_2$ and $P7_1$ direction register (bit 2 at address $03EE_{16}$, bit 1 at address $03EF_{16}$)= “0” (Can be used as an input port when performing transmission only)
CLKi ($P6_1$, $P7_2$)	Programmable I/O port	Internal/external clock select bit (bit 3 at address $03A0_{16}$, 0378_{16}) = “0”
	Transfer clock input	Internal/external clock select bit (bit 3 at address $03A0_{16}$, 0378_{16}) = “1” Port $P6_1$ and $P7_2$ direction register (bit 1 at address $03EE_{16}$, bit 2 at address $03EF_{16}$) = “0”
$\overline{CTS}$i/$\overline{RTS}$i ($P6_0$, $P7_3$)	$\overline{CTS}$ input	$\overline{CTS}$/$\overline{RTS}$ disable bit (bit 4 at address $03A4_{16}$, $037C_{16}$) =“0” $\overline{CTS}$/$\overline{RTS}$ function select bit (bit 2 at address $03A4_{16}$, $037C_{16}$) = “0” Port $P6_0$ and $P7_3$ direction register (bit 0 at address $03EE_{16}$, bit 3 at address $03EF_{16}$) = “0”
	$\overline{RTS}$ output	$\overline{CTS}$/$\overline{RTS}$ disable bit (bit 4 at address $03A4_{16}$, $037C_{16}$) = “0” $\overline{CTS}$/$\overline{RTS}$ function select bit (bit 2 at address $03A4_{16}$, $037C_{16}$) = “1”
	Programmable I/O port	$\overline{CTS}$/$\overline{RTS}$ disable bit (bit 4 at address $03A4_{16}$, $037C_{16}$) = “1”

<UART0>

• Example of transmit timing when transfer data is 8 bits long (parity enabled, one stop bit)

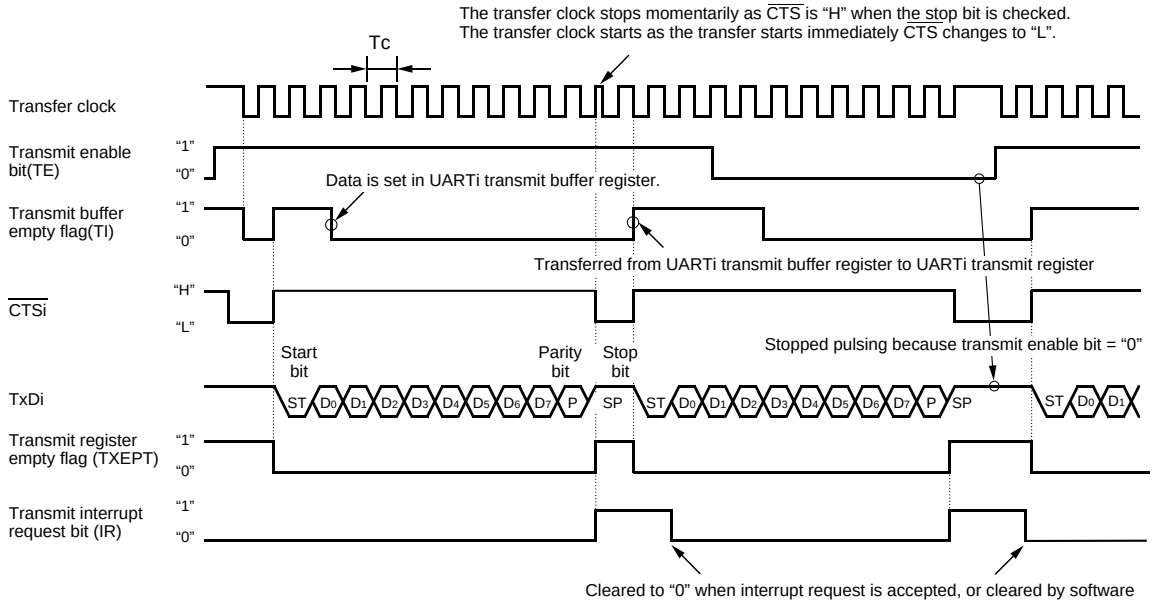

Shown in ( ) are bit symbols.

The above timing applies to the following settings :
- Parity is enabled.
- One stop bit.
- CTS function is selected.
- Transmit interrupt cause select bit = "1".

Tc = 16 (n + 1) / fi or 16 (n + 1) / f_{EXT}
fi : frequency of BRGi count source (f_1, f_8, f_{32})
f_{EXT} : frequency of BRGi count source (external clock)
n : value set to BRGi

<UART0>

• Example of transmit timing when transfer data is 9 bits long (parity disabled, two stop bits)

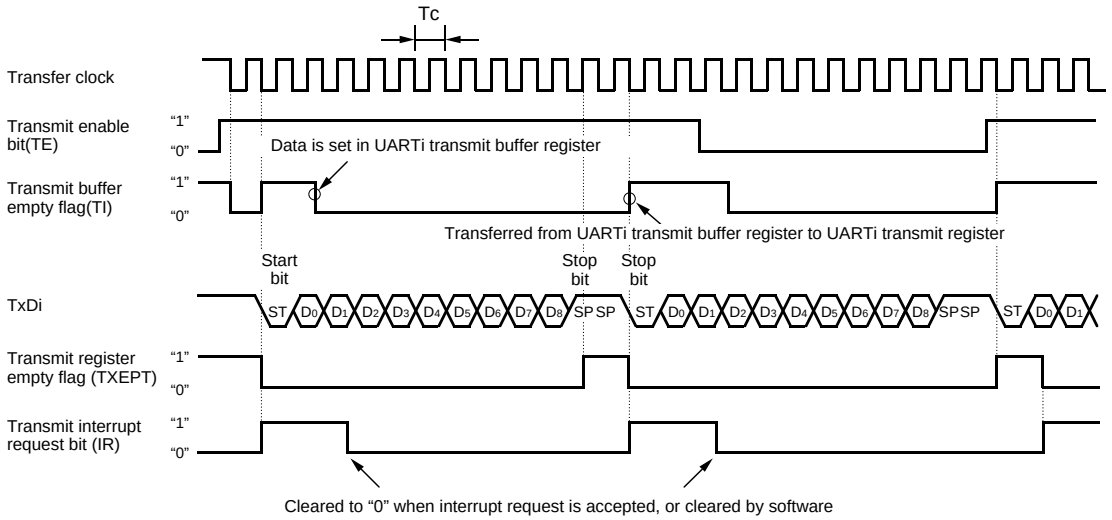

Shown in ( ) are bit symbols.

The above timing applies to the following settings :
- Parity is disabled.
- Two stop bits.
- CTS function is disabled.
- Transmit interrupt cause select bit = "0".

Tc = 16 (n + 1) / fi or 16 (n + 1) / f_{EXT}
fi : frequency of BRGi count source (f_1, f_8, f_{32})
f_{EXT} : frequency of BRGi count source (external clock)
n : value set to BRGi

Figure 2.11.23 Typical transmit/receive timings in UART mode

<UART2>

• Example of transmit timing when transfer data is 8 bits long (parity enabled, one stop bit)

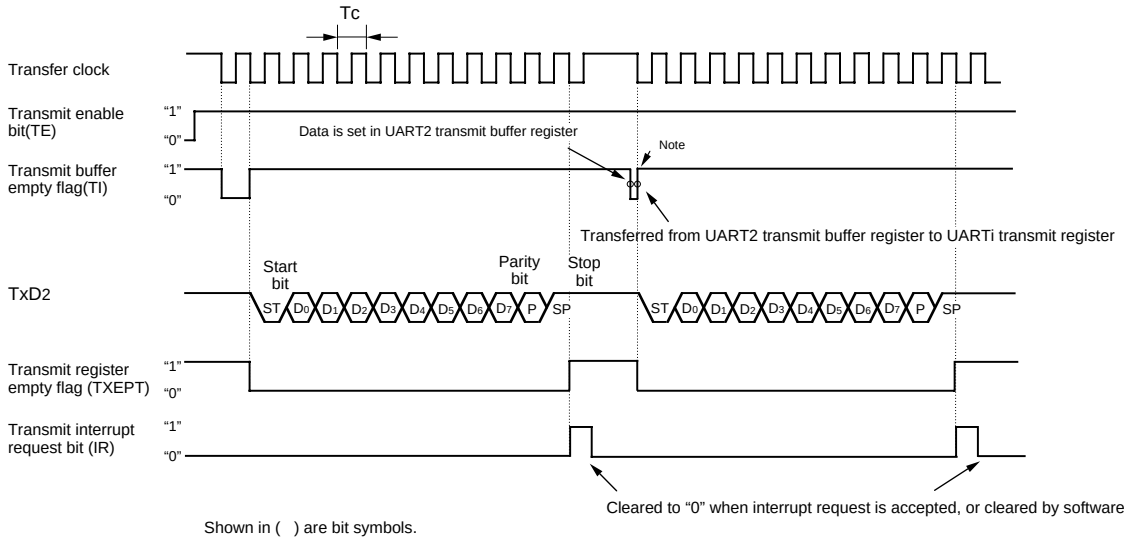

Shown in ( ) are bit symbols.

The above timing applies to the following settings :
- Parity is enabled.
- One stop bit.
- Transmit interrupt cause select bit = "1".

Tc = 16 (n + 1) / fi
fi : frequency of BRG2 count source (f1, f8, f32)
n : value set to BRG2

Note: The transmit is started with overflow timing of BRG after having written in a value at the transmit buffer in the above timing.

<UART2, UART0>

• Example of receive timing when transfer data is 8 bits long (parity disabled, one stop bit)

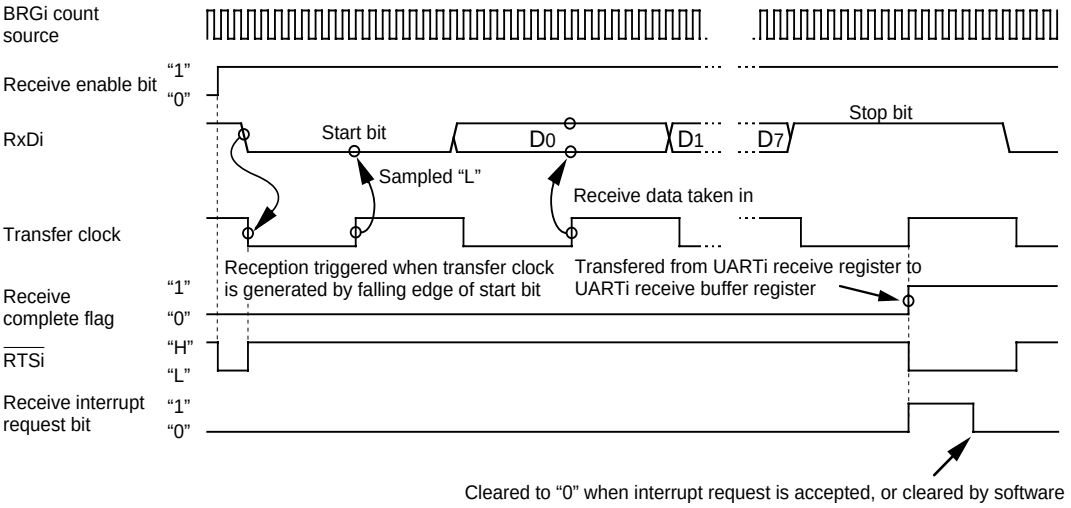

The above timing applies to the following settings :
- Parity is disabled.

Figure 2.11.23 Typical transmit/receive timings in UART mode

(1) Sleep mode (UART0)

This mode is used to transfer data between specific microcomputers among multiple microcomputers connected using UART0. The sleep mode is selected when the sleep select bit (bit 7 at address $03A0_{16}$) is set to "1" during reception. In this mode, the unit performs receive operation when the MSB of the received data = "1" and does not perform receive operation when the MSB = "0".

(2) Function for switching serial data logic (UART2)

When the data logic select bit (bit 6 of address $037D_{16}$) is assigned 1, data is inverted in writing to the transmission buffer register or reading the reception buffer register. Figure 2.11.24 shows the example of timing for switching serial data logic.

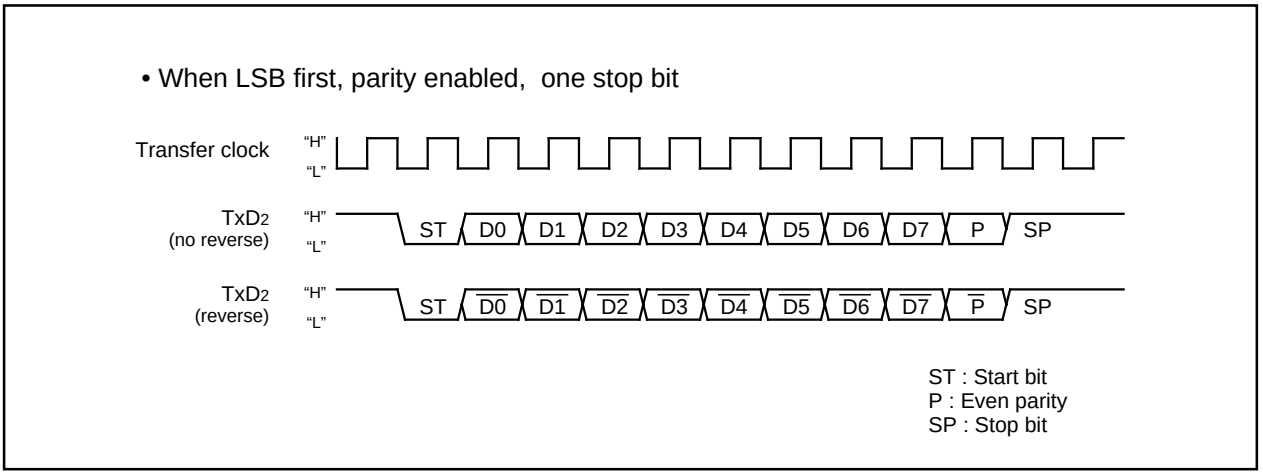

Figure 2.11.24 Timing for switching serial data logic

(3) TxD, RxD I/O polarity reverse function (UART2)

This function is to reverse TxD pin output and RxD pin input. The level of any data to be input or output (including the start bit, stop bit(s), and parity bit) is reversed. Set this function to "0" (not to reverse) for usual use.

(4) Bus collision detection function and other functions (UART2)

This function is to sample the output level of the TxD pin and the input level of the RxD pin at the rising edge of the transfer clock; if their values are different, then an interrupt request occurs. Figure 2.11.26 shows the example of detection timing of a buss collision (in UART mode).

And also, bit 5 of the special UART2 mode register is used as the selection bit for auto clear function select bit of enable bit. Setting this bit to “1” automatically resets the transmit enable bit to “0” when “1” is set in the bus collision detection interrupt request bit (nonconformity) (refer to Figure 2.11.25).

Bit 6 of the special UART2 mode register is used as the transmit start condition select bit. Setting this bit to “1” starts the TxD transmission in synchronization with the falling edge of the RxD terminal (refer to Figure 2.11.26).

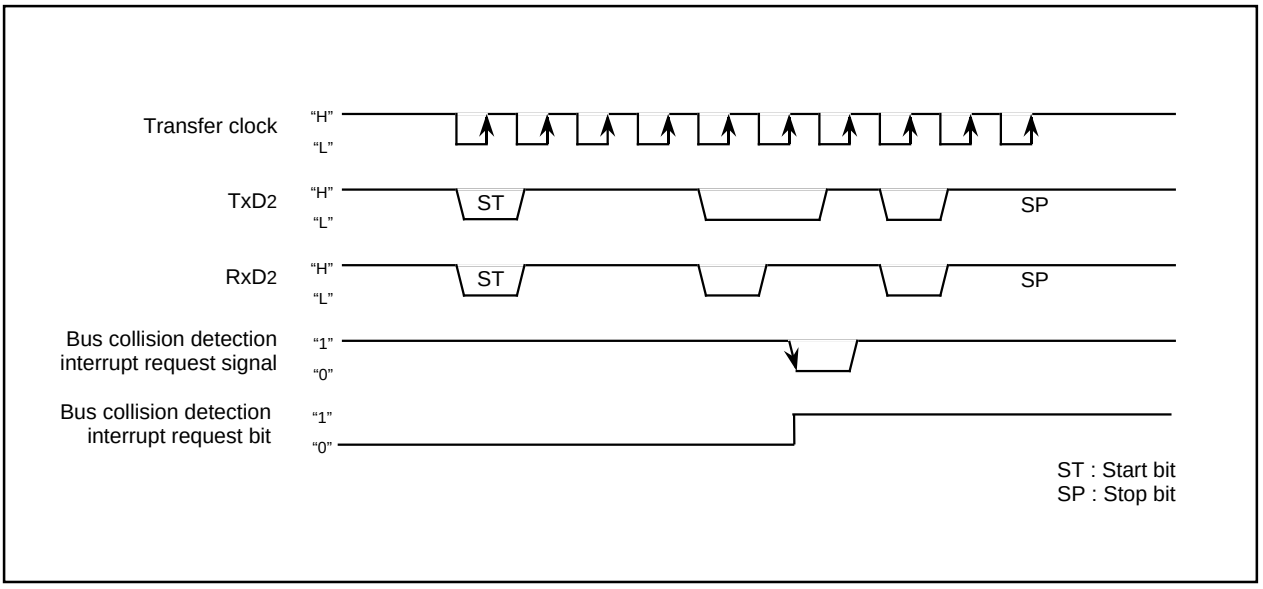

Figure 2.11.25 Detection timing of a bus collision (in UART mode)

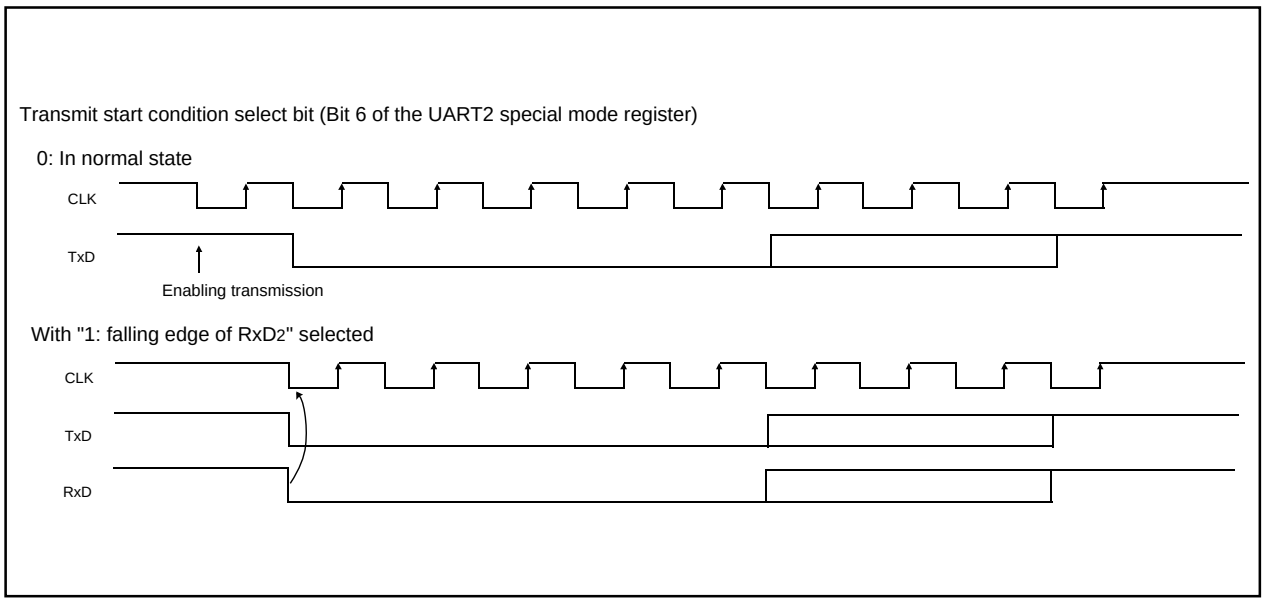

Figure 2.11.26 Some other functions

2.11.4 Clock-asynchronous Serial I/O Mode (Compliant with the SIM Interface)

The SIM interface is used for connecting the microcomputer with a memory card I/C or the like; adding some extra settings in UART2 clock-asynchronous serial I/O mode allows the user to effect this function. Tables 2.11.8 and 2.11.9 show the specifications of clock-asynchronous serial I/O mode (compliant with the SIM interface).

Table 2.11.8 Specifications of clock-asynchronous serial I/O mode (compliant with the SIM interface) (1)

Item	Specification
Transfer data format	• Transfer data 8-bit UART mode (bit 2 through bit 0 of address 0378_{16} = “101_2”) • One stop bit (bit 4 of address 0378_{16} = “0”) • With the direct format chosen Set parity to “even” (bit 5 and bit 6 of address 0378_{16} = “1” and “1” respectively) Set data logic to “direct” (bit 6 of address $037D_{16}$ = “0”). Set transfer format to LSB (bit 7 of address $037C_{16}$ = “0”). • With the inverse format chosen Set parity to “odd” (bit 5 and bit 6 of address 0378_{16} = “0” and “1” respectively) Set data logic to “inverse” (bit 6 of address $037D_{16}$ = “1”) Set transfer format to MSB (bit 7 of address $037C_{16}$ = “1”)
Transfer clock	• With the internal clock chosen (bit 3 of address 0378_{16} = “0”) : fi / 16 (n + 1) (Note 1) : $f_i=f_1, f_8, f_{32}$ • With an external clock chosen (bit 3 of address 0378_{16} = “1”) : f_{EXT} / 16 (n+1) (Note 1) (Note 2)
Transmission / reception control	• Disable the $\overline{CTS}$ and $\overline{RTS}$ function (bit 4 of address $037C_{16}$ = “1”)
Other settings	• The sleep mode select function is not available for UART2 • Set transmission interrupt factor to “transmission completed” (bit 4 of address $037D_{16}$ = “1”)
Transmission start condition	• To start transmission, the following requirements must be met: - Transmit enable bit (bit 0 of address $037D_{16}$) = “1” - Transmit buffer empty flag (bit 1 of address $037D_{16}$) = “0”
Reception start condition	• To start reception, the following requirements must be met: - Reception enable bit (bit 2 of address $037D_{16}$) = “1” - Detection of a start bit
Interrupt request generation timing	• When transmitting When data transmission from the UART2 transfer register is completed (bit 4 of address $037D_{16}$ = “1”) • When receiving When data transfer from the UART2 receive register to the UART2 receive buffer register is completed

Table 2.11.9 Specifications of clock-asynchronous serial I/O mode (compliant with the SIM interface) (2)

Item	Specification
Error detection	• Overrun error (see the specifications of clock-asynchronous serial I/O) (Note 3) • Framing error (see the specifications of clock-asynchronous serial I/O) • Parity error (see the specifications of clock-asynchronous serial I/O) - On the reception side, an "L" level is output from the TxD_2 pin by use of the parity error signal output function (bit 7 of address $037D_{16}$ = "1") when a parity error is detected - On the transmission side, a parity error is detected by the level of input to the RxD2 pin when a transmission interrupt occurs • The error sum flag (see the specifications of clock-asynchronous serial I/O)

Notes 1: 'n' denotes the value 00_{16} to FF_{16} that is set to the UARTi bit rate generator.

2: f_{EXT} is input from the CLK_2 pin.

3: If an overrun error occurs, the UART2 receive buffer will have the next data written in. Note also that the UARTi receive interrupt request bit is not set to "1".

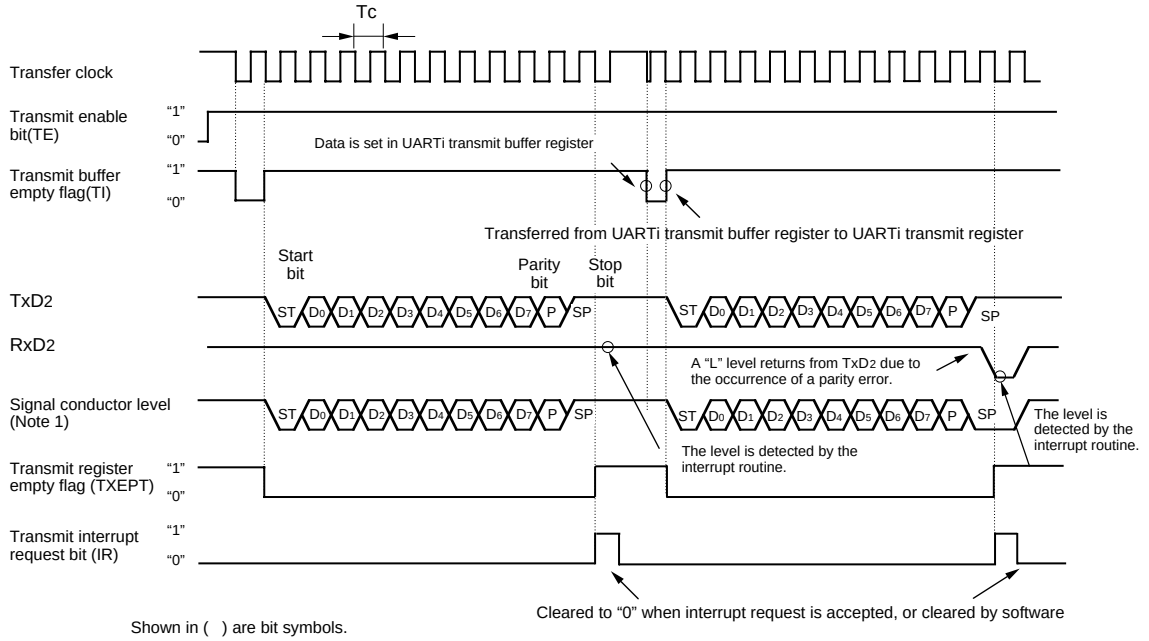

Shown in ( ) are bit symbols.

The above timing applies to the following settings :
- Parity is enabled.
- One stop bit.
- Transmit interrupt cause select bit = "1".

$Tc = 16 (n + 1) / fi$ or $16 (n + 1) / f_{EXT}$
fi : frequency of BRGi count source (f_1, f_8, f_{32})
f_{EXT} : frequency of BRGi count source (external clock)
n : value set to BRGi

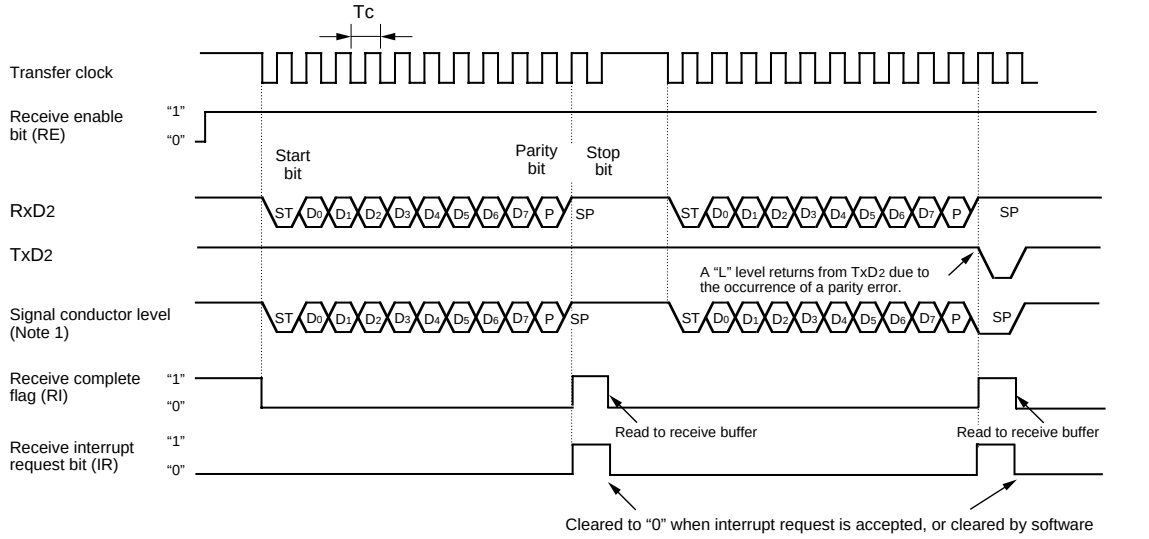

Shown in ( ) are bit symbols.

The above timing applies to the following settings :
- Parity is enabled.
- One stop bit.
- Transmit interrupt cause select bit = "0".

$Tc = 16 (n + 1) / fi$ or $16 (n + 1) / f_{EXT}$
fi : frequency of BRGi count source (f_1, f_8, f_{32})
f_{EXT} : frequency of BRGi count source (external clock)
n : value set to BRGi

Note: Equal in waveform because TxD_2 and RxD_2 are connected.

Figure 2.11.27 Typical transmit/receive timing in UART mode (compliant with the SIM interface)

(1) Function for outputting a parity error signal

With the error signal output enable bit (bit 7 of address 037D16) assigned “1”, you can output an “L” level from the TxD2 pin when a parity error is detected. In step with this function, the generation timing of a transmission completion interrupt changes to the detection timing of a parity error signal. Figure 2.11.28 shows the output timing of the parity error signal.

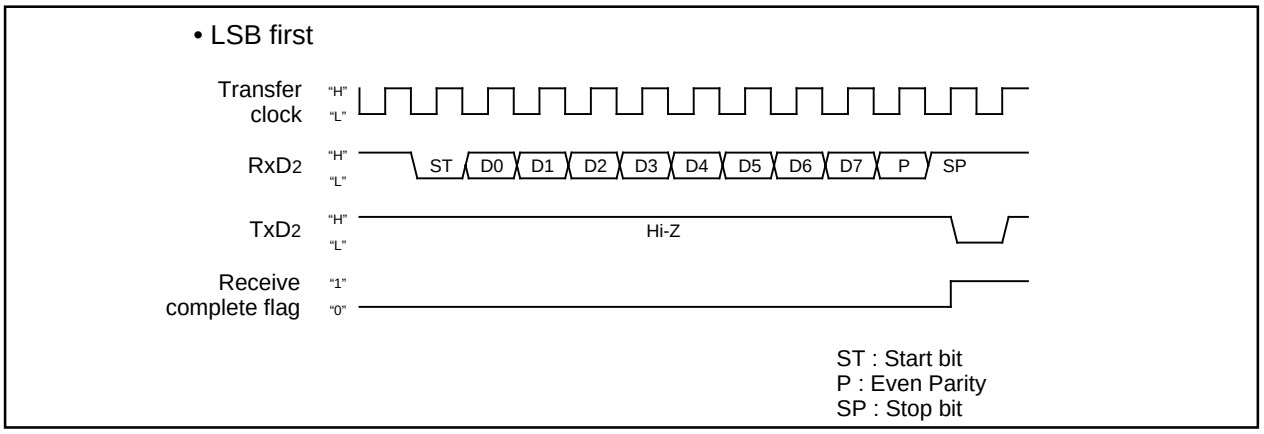

Figure 2.11.28 Output timing of the parity error signal

(2) Direct format/inverse format

Connecting the SIM card allows you to switch between direct format and inverse format. If you choose the direct format, D0 data is output from TxD2. If you choose the inverse format, D7 data is inverted and output from TxD2.

Figure 2.11.29 shows the SIM interface format.

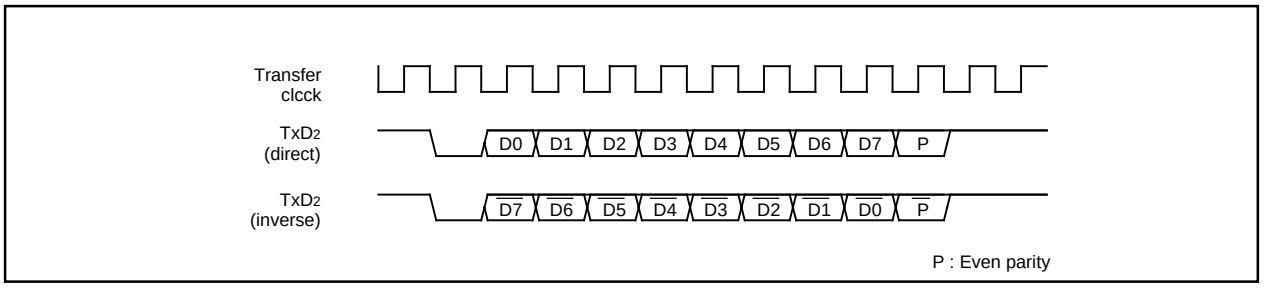

Figure 2.11.29 SIM interface format

Figure 2.11.30 shows the example of connecting the SIM interface. Connect TxD2 and RxD2 and apply pull-up.

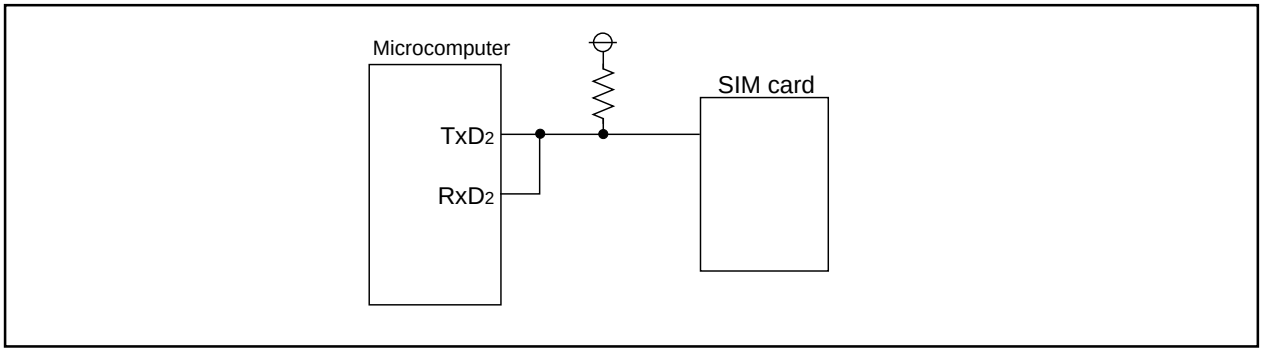

Figure 2.11.30 Connecting the SIM interface

2.11.5 Serial Interface Ports

The I/O ports ($P6_7$, $P7_0$ to $P7_2$) function as I/O ports of UART2 and multi-master I^2C-BUS interface 0 (refer to “2.11.6 Multi-master I^2C-BUS interface i”) . Set the connection between both serial interfaces and each port by bits 0 and 1 (BSEL0 and BSEL1) of the peripheral mode register (address $027D_{16}$) and bit 2 (FIICON) of the I^2C0 port selection register (address $02E5_{16}$).

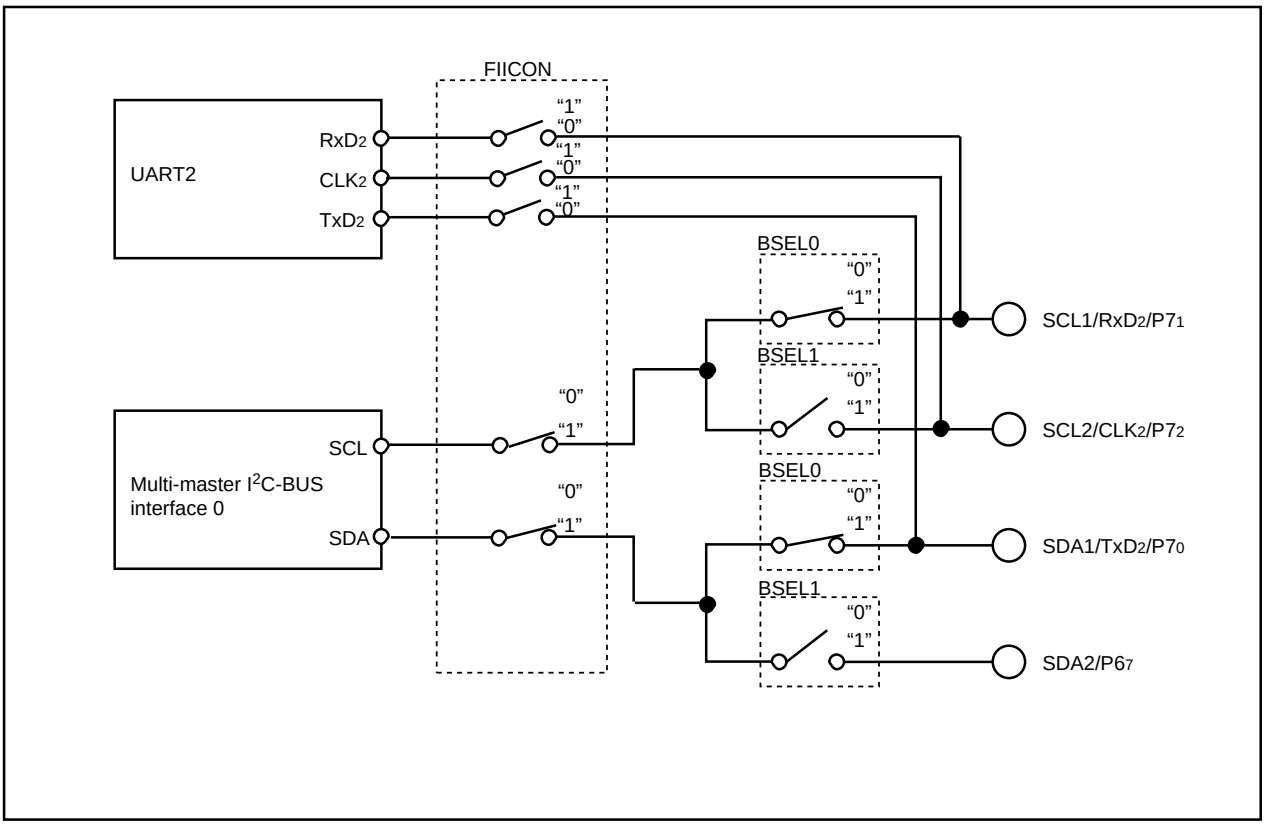

Figure 2.11.31 Serial interface port control

2.11.6 Multi-master I^{2}C-BUS Interface 0 and Multi-master I^{2}C-BUS Interface 1

The multi-master I^{2}C-BUS interface 0 and 1 have each dedicated circuit and operate independently.

The multi-master I^{2}C-BUS interface i is a serial communications circuit, conforming to the Philips I^{2}C-BUS data transfer format. This interface i, offering both arbitration lost detection and a synchronous functions, is useful for the multi-master serial communications.

Figures 2.11.32 and 2.11.33 show a block diagram of the multi-master I^{2}C-BUS interface i and Table 2.11.13 shows multi-master I^{2}C-BUS interface i functions.

This multi-master I^{2}C-BUS interface i consists of the I^{2}Ci address register, the I^{2}Ci data shift register, the I^{2}Ci clock control register, the I^{2}Ci control register, the I^{2}Ci status register, the I^{2}Ci port selection register and other control circuits.

Table 2.11.13 Multi-master I^{2}C-BUS Interface Functions

Item	Function
Format	In conformity with Philips I^{2}C-BUS standard: 10-bit addressing format 7-bit addressing format High-speed clock mode Standard clock mode
Communication mode	In conformity with Philips I^{2}C-BUS standard: Master transmission Master reception Slave transmission Slave reception
SCL clock frequencyn	16.1 kHz to 400 kHz (at BCLK = 10 MHz)

Note : We are not responsible for any third party's infringement of patent rights or other rights attributable to the use of the control function (bits 6 and 7 of the I^{2}C control register at address 027D$_{16}$) for connections between the I^{2}C-BUS interface 0 and ports (SCL1, SCL2, SDA1, SDA2).

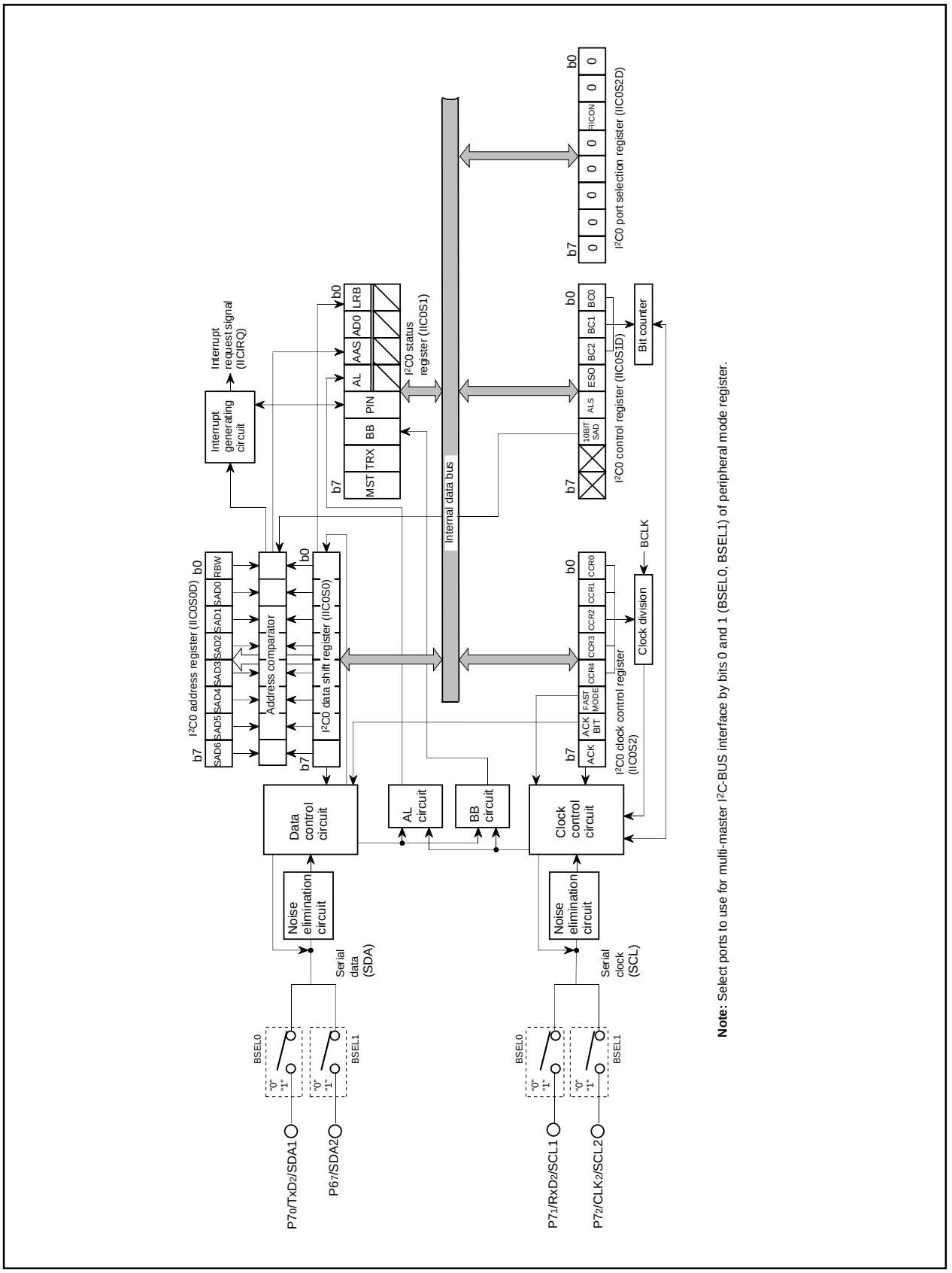

Fig. 2.11.32 Block Diagram of Multi-master I²C-BUS Interface 0

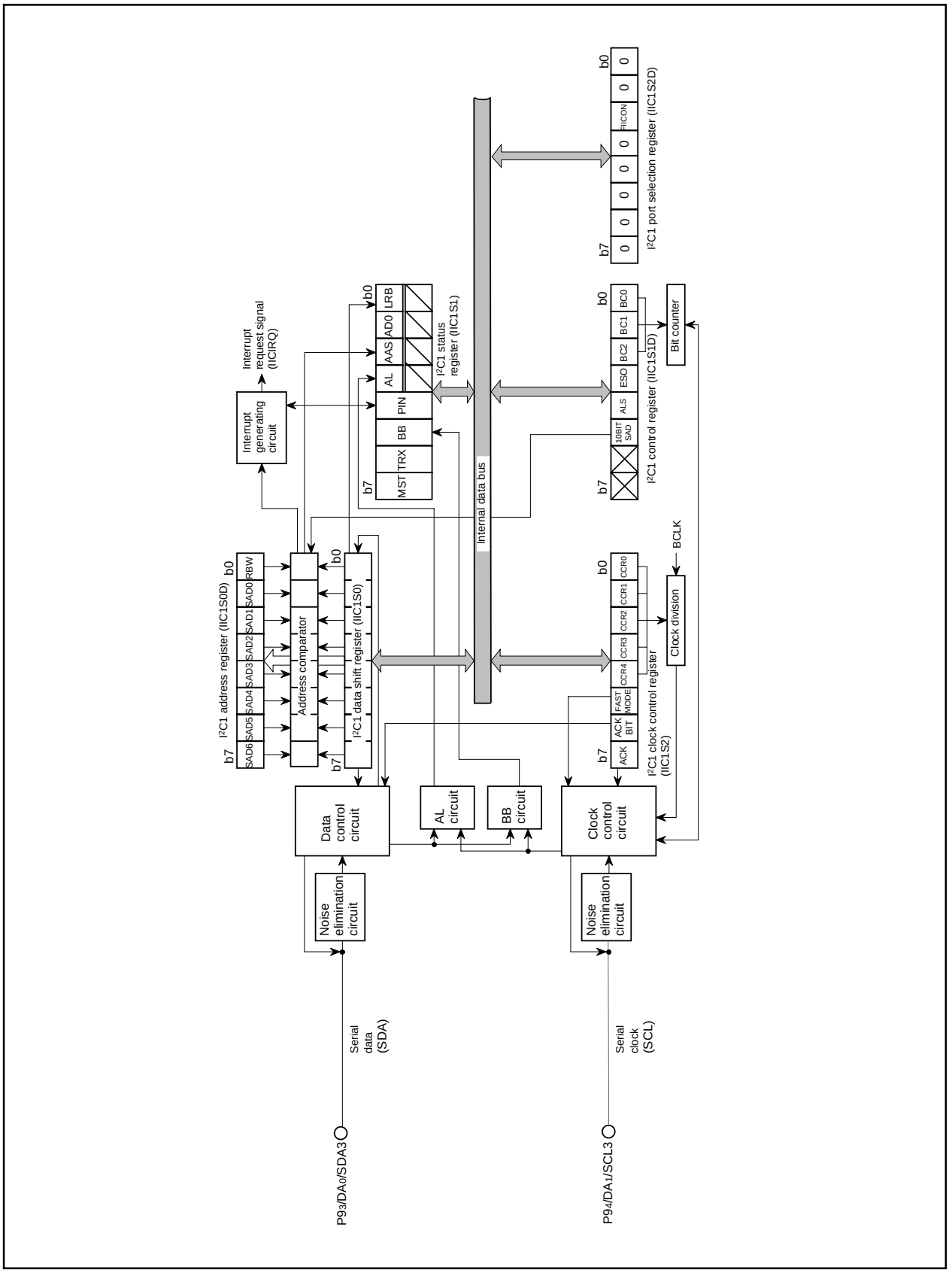

Fig. 2.11.33 Block Diagram of Multi-master I²C-BUS Interface 1

(1) I^2Ci port selection register (i = 0, 1)

The I^2Ci port selection register consists of bit to validate the multi-master I^2C-BUS interface i function.

■ Bit 2: Multi-master I^2C-BUS interface valid bit (FIICON)

When this bit is “0,” the multi-master I^2C-BUS interface i is nonactive; when “1,” it is active. When selecting active, multi-master I^2C-BUS interface 0 is connected with the ports selected by bits 0 and 1 of the peripheral mode register (address $027D_{16}$) and multi-master I^2C-BUS interface 1 is connected with the ports $P9_3$ and $P9_4$.

Note: It needs 10-BCLK cycles from setting this bit to “1” to being active of multi-master I^2C-BUS interface i. Accordingly, do not access multi-master I^2C-BUS interface i-related registers in this period.

I^2Ci port selection register (i = 0, 1)

b7	b6	b5	b4	b3	b2	b1	b0
0	0	0	0	0		0	0

Symbol	Address	When reset
IIC0S2D	$02E5_{16}$	$00??0000_2$
IIC1S2D	$02ED_{16}$	$00??0000_2$

Bit Symbol	Bit name	Function	R	W
Reserved bits		Must always be set to “0”	—	○
FIICON	Multi-master I^2C-BUS interface valid bit	0 : Nonactive 1 : Active	○	○
Reserved bits		Must always be set to “0”	—	○

Fig. 2.11.34 I^2Ci port selection register (i = 0, 1)

(2) I^2Ci data shift register, I^2Ci transmit buffer register (i = 0, 1)

The I^2Ci data shift register is an 8-bit shift register to store receive data and write transmit data. When transmit data is written into this register, it is transferred to the outside from bit 7 in synchronization with the SCL clock, and each time one-bit data is output, the data of this register are shifted one bit to the left. When data is received, it is input to this register from bit 0 in synchronization with the SCL clock, and each time one-bit data is input, the data of this register are shifted one bit to the left.

The I^2Ci data shift register is in a write enable status only when the ESO bit of the I^2Ci control register is “1.” The bit counter is reset by a write instruction to the I^2Ci data shift register. When both the ESO bit and the MST bit of the I^2Ci status register are “1,” the SCL is output by a write instruction to the I^2Ci data shift register. Reading data from the I^2Ci data shift register is always enabled regardless of the ESO bit value.

The I^2Ci transmit buffer register is a register to store transmit data (slave address) to the I^2Ci data shift register before RESTART condition generation. That is, in master, transmit data written to the I^2Ci transmit buffer register is written to the I^2Ci data shift register simultaneously. However, the SCL is not output. The I^2Ci transmit buffer register can be written only when the ESO bit is “1,” reading data from the I^2Ci transmit buffer register is disabled regardless of the ESO bit value.

Notes 1: To write data into the I^2Ci data shift register or the I^2Ci transmit buffer register after the MST bit value changes from “1” to “0” (slave mode), keep an interval of 20 BCLK or more.

2: To generate START/RESTART condition after the I^2Ci data shift register or the I^2Ci transmit buffer register is written, keep an interval of 2 BCLK or more.

I^2Ci data shift register (i = 0, 1)

b7 b6 b5 b4 b3 b2 b1 b0

Symbol	Address	When reset
IIC0S0	$02E0_{16}$	Indeterminate
IIC1S0	$02E8_{16}$	Indeterminate

Bit Symbol	Bit name	Function	R	W
D0	Data shift register	This is an 8-bit shift register to store receive data and write transmit data.	○	○
D1				
D2				
D3				
D4				
D5				
D6				
D7				

Note: To write data into the I^2Ci data shift register after setting the MST bit to "0" (slave mode), keep an interval of 8 machine cycles or more.

Fig. 2.11.35 I^2Ci data shift register (i = 0, 1)

I^2Ci transmit buffer register (i = 0, 1)

b7 b6 b5 b4 b3 b2 b1 b0

Symbol	Address	When reset
IIC0S0S	$02E6_{16}$	Indeterminate
IIC1S0S	$02EE_{16}$	Indeterminate

Bit Symbol	Bit name	Function	R	W
S0S0	Transmit buffer register	This is an 8-bit register to write transmit data to I^2Ci data shift register.	×	○
S0S1				
S0S2				
S0S3				
S0S4				
S0S5				
S0S6				
S0S7				

Fig. 2.11.36 I^2Ci transmit buffer register (i = 0, 1)

(3) I^2Ci address register (i = 0, 1)

The I^2Ci address register consists of a 7-bit slave address and a $\overline{read}$/write bit. In the addressing mode, the slave address written in this register is compared with the address data to be received immediately after the START condition are detected.

■ **Bit 0: $\overline{read}$/write bit (RBW)**

Not used when comparing addresses, in the 7-bit addressing mode. In the 10-bit addressing mode, the first address data to be received is compared with the contents (SAD6 to SAD0 + RBW) of the I^2Ci address register.

The RBW bit is cleared to “0” automatically when the stop condition is detected.

■ **Bits 1 to 7: slave address (SAD0–SAD6)**

These bits store slave addresses. Regardless of the 7-bit addressing mode and the 10-bit addressing mode, the address data transmitted from the master is compared with the contents of these bits.

I^2Ci address register (i = 0, 1)

b7	b6	b5	b4	b3	b2	b1	b0

Symbol	Address	When reset
IIC0S0D	$02E1_{16}$	00_{16}
IIC1S0D	$02E9_{16}$	00_{16}

Bit Symbol	Bit name	Function	R	W
RBW	$\overline{Read}$/write bit	<Only in 10-bit addressing (in slave) mode> The last significant bit of address data is compared. 0 : Wait the first byte of slave address after START condition (read state) 1 : Wait the first byte of slave address after RESTART condition (write state)	○	○
SAD0	Slave address	<In both modes> The address data is compared.	○	○
SAD1				
SAD2				
SAD3				
SAD4				
SAD5				
SAD6				

Fig. 2.11.37 I^2Ci address register (i = 0, 1)

(4) I^2Ci clock control register (i = 0, 1)

The I^2Ci clock control register is used to set ACK control, SCL mode and SCL frequency.

■ **Bits 0 to 4: SCL frequency control bits (CCR0–CCR4)**

These bits control the SCL frequency.

■ **Bit 5: SCL mode specification bit (FAST MODE)**

This bit specifies the SCL mode. When this bit is set to “0,” the standard clock mode is set. When the bit is set to “1,” the high-speed clock mode is set.

■ **Bit 6: ACK bit (ACK BIT)**

This bit sets the SDA status when an ACK clock* is generated. When this bit is set to “0,” the ACK return mode is set and SDA goes to LOW at the occurrence of an ACK clock. When the bit is set to “1,” the ACK non-return mode is set. The SDA is held in the HIGH status at the occurrence of an ACK clock.

However, when the slave address matches the address data in the reception of address data at ACK BIT = “0,” the SDA is automatically made LOW (ACK is returned). If there is a mismatch between the slave address and the address data, the SDA is automatically made HIGH (ACK is not returned).

*ACK clock: Clock for acknowledgement

■ **Bit 7: ACK clock bit (ACK)**

This bit specifies a mode of acknowledgment which is an acknowledgment response of data transmission. When this bit is set to “0,” the no ACK clock mode is set. In this case, no ACK clock occurs after data transmission. When the bit is set to “1,” the ACK clock mode is set and the master generates an ACK clock upon completion of each 1-byte data transmission.The device for transmitting address data and control data releases the SDA at the occurrence of an ACK clock (make SDA HIGH) and receives the ACK bit generated by the data receiving device.

Note: Do not write data into the I^2Ci clock control register during transmission. If data is written during transmission, the I^2Ci clock generator is reset, so that data cannot be transmitted normally.

I^2Ci clock control register (i = 0, 1)

b7	b6	b5	b4	b3	b2	b1	b0

Symbol	Address	When reset
IIC0S2	$02E4_{16}$	00_{16}
IIC1S2	$02EC_{16}$	00_{16}

Bit Symbol	Bit name	Function			R	W
CCR0	SCL frequency control bits	Setup value of CCR4–CCR0	Standard clock mode	High speed clock mode	○	○
		00 to 02	Setup disabled	Setup disabled		
CCR1		03	Setup disabled	333		
		04	Setup disabled	250		
CCR2		05	100	400 (See note)		
		06	83.3	166		
CCR3		:	500/CCR value	1000/CCR value		
		1D	17.2	34.5		
CCR4		1E	16.6	33.3		
		1F	16.1	32.3		
		(at BCLK = 10 MHz, unit : kHz)				
FAST MODE	SCL mode specification bit	0 : Standard clock mode 1 : High-speed clock mode			○	○
ACK BIT	ACK bit	0 : ACK is returned. 1 : ACK is not returned.			○	○
ACK	ACK clock bit	0 : No ACK clock 1 : ACK clock			○	○

Note: At 400 kHz in the high-speed clock mode, the duty is as below.
"0" period : "1" period = 3 : 2
In the other cases, the duty is as below.
"0" period : "1" period = 1 : 1

Fig. 2.11.38 I^2Ci clock control register (i = 0, 1)

(5) I^2Ci control register (i = 0, 1)

The I^2Ci control register controls the data communication format.

■ **Bits 0 to 2: bit counter (BC0–BC2)**

These bits decide the number of bits for the next 1-byte data to be transmitted. An interrupt request signal occurs immediately after the number of bits specified with these bits are transmitted.

When a START condition is received, these bits become "000_2" and the address data is always transmitted and received in 8 bits.

Note: When the bit counter value = "111_2," a STOP condition and START condition cannot be waited.

■ **Bit 3: I^2C-BUS interface i use enable bit (ESO)**

This bit enables usage of the multimaster I^2C-BUS interface i. When this bit is set to "0," the use disable status is provided, so the SDA and the SCL become high-impedance. When the bit is set to "1," use of the interface is enabled.

When ESO = "0," the following is performed.

• PIN = "1," BB = "0" and AL = "0" are set (they are bits of the I^2Ci status register).

• Writing data to the I^2Ci data shift register and the I^2Ci transmit buffer register is disabled.

■ **Bit 4: data format selection bit (ALS)**

This bit decides whether or not to recognize slave addresses. When this bit is set to "0," the addressing format is selected, so that address data is recognized. When a match is found between a slave address and address data as a result of comparison or when a general call (refer to "(6) I^2Ci status register," bit 1) is received, transmission processing can be performed. When this bit is set to "1," the free data format is selected, so that slave addresses are not recognized.

■ **Bit 5: addressing format selection bit (10BIT SAD)**

This bit selects a slave address specification format. When this bit is set to "0," the 7-bit addressing format is selected. In this case, only the high-order 7 bits (slave address) of the I^2Ci address register are compared with address data. When this bit is set to "1," the 10-bit addressing format is selected, all the bits of the I^2Ci address register are compared with address data.

I^2Ci control register (i = 0, 1)

b7	b6	b5	b4	b3	b2	b1	b0

Symbol	Address	When reset
IIC0S1D	$02E3_{16}$	00_{16}
IIC1S1D	$02EB_{16}$	00_{16}

Bit Symbol	Bit name	Function	R	W
BC0 BC1 BC2	Bit counter (Number of transmit/receive bits)	b2 b1 b0 0 0 0 : 8 0 0 1 : 7 0 1 0 : 6 0 1 1 : 5 1 0 0 : 4 1 0 1 : 3 1 1 0 : 2 1 1 1 : 1	○	○
ESO	I^2C-BUS interface i use enable bit	0 : Disabled 1 : Enabled	○	○
ALS	Data format selection bit	0 : Addressing format 1 : Free data format	○	○
10BIT SAD	Address format selection bit	0 : 7-bit addressing format 1 : 10-bit addressing format	○	○
Nothing is assigned. In an attempt to write to these bits, write “0.” The value, if read, turns out to be “0.”			—	—

Fig. 2.11.39 I^2Ci control register (i = 0, 1)

(6) I^2Ci status register (i = 0, 1)

The I^2Ci status register controls the I^2C-BUS interface i status. Bits 0 to 3, 5 are read-only bits and bits 4, 6, 7 can be read out and written to.

■ **Bit 0: last receive bit (LRB)**

This bit stores the last bit value of received data and can also be used for ACK receive confirmation. If ACK is returned when an ACK clock occurs, the LRB bit is set to “0.” If ACK is not returned, this bit is set to “1.” Except in the ACK mode, the last bit value of received data is input. The state of this bit is changed from “1” to “0” by executing a write instruction to the I^2Ci data shift register or the I^2Ci transmit buffer register.

■ **Bit 1: general call detecting flag (AD0)**

This bit is set to “1” when a general call* whose address data is all “0” is received in the slave mode. By a general call of the master device, every slave device receives control data after the general call. The AD0 bit is set to “0” by detecting the STOP condition or START condition.

✻General call: The master transmits the general call address “00_{16}” to all slaves.

■ **Bit 2: slave address comparison flag (AAS)**

This flag indicates a comparison result of address data.

<<In the slave receive mode, when the 7-bit addressing format is selected, this bit is set to “1” in one of the following conditions.>>

- The address data immediately after occurrence of a START condition matches the slave address stored in the high-order 7 bits of the I^2Ci address register.
- A general call is received.

<<In the slave reception mode, when the 10-bit addressing format is selected, this bit is set to “1” with the following condition.>>

- When the address data is compared with the I^2Ci address register (8 bits consists of slave address and RBW), the first bytes match.

<<The state of this bit is changed from “1” to “0” by executing a write instruction to the I^2Ci data shift register or the I^2Ci transmit buffer register.>>

■ **Bit 3: arbitration lost* detecting flag (AL)**

n the master transmission mode, when a device other than the microcomputer sets the SDA to “L,”, arbitration is judged to have been lost, so that this bit is set to “1.” At the same time, the TRX bit is set to “0,” so that immediately after transmission of the byte whose arbitration was lost is completed, the MST bit is set to “0.” When arbitration is lost during slave address transmission, the TRX bit is set to “0” and the reception mode is set. Consequently, it becomes possible to receive and recognize its own slave address transmitted by another master device.

✻Arbitration lost: The status in which communication as a master is disabled.

■ **Bit 4: I^2C-BUS interface i interrupt request bit (PIN)**

This bit generates an interrupt request signal. Each time 1-byte data is transmitted, the state of the PIN bit changes from “1” to “0.” At the same time, an interrupt request signal is sent to the CPU. The PIN bit is set to “0” in synchronization with a falling edge of the last clock (including the ACK clock) of an internal clock and an interrupt request signal occurs in synchronization with a falling edge of the PIN bit. When detecting the STOP condition in slave, the multi-master I^2C-BUS interface interrupt request bit (IR) is set to “1” (interrupt requested) regardless of falling of PIN bit. When the PIN bit is “0,” the SCL is kept in the “0” state and clock generation is disabled. Figure 2.11.41 shows an interrupt request signal generating timing chart.

The PIN bit is set to “1” in any one of the following conditions.

- Writing “1” to the PIN bit
- Executing a write instruction to the I^2Ci data shift register or the I^2Ci transmit buffer register (See note).
- When the ESO bit is “0”
- At reset

Note: It takes 8 BCLK cycles or more until PIN bit becomes “1” after write instructions are executed to these registers.

The conditions in which the PIN bit is set to “0” are shown below:

- Immediately after completion of 1-byte data transmission (including when arbitration lost is detected)
- Immediately after completion of 1-byte data reception
- In the slave reception mode, with ALS = “0” and immediately after completion of slave address or general call address reception
- In the slave reception mode, with ALS = “1” and immediately after completion of address data reception

■ **Bit 5: bus busy flag (BB)**

This bit indicates the status of use of the bus system. When this bit is set to “0,” this bus system is not busy and a START condition can be generated. When this bit is set to “1,” this bus system is busy and the occurrence of a START condition is disabled by the START condition duplication prevention function (See note).

This flag can be written by software only in the master transmission mode. In the other modes, this bit is set to “1” by detecting a START condition and set to “0” by detecting a STOP condition. When the ESO bit of the I^2Ci control register is “0” and at reset, the BB flag is kept in the “0” state.

■ **Bit 6: communication mode specification bit (transfer direction specification bit: TRX)**

This bit decides the direction of transfer for data communication. When this bit is “0,” the reception mode is selected and the data of a transmitting device is received. When the bit is “1,” the transmission mode is selected and address data and control data are output into the SDA in synchronization with the clock generated on the SCL.

When the ALS bit of the I^2Ci control register is “0” in the slave reception mode is selected, the TRX bit is set to “1” (transmit) if the least significant bit (R/$\overline{W}$ bit) of the address data transmitted by the master is “1.” When the ALS bit is “0” and the R/$\overline{W}$ bit is “0,” the TRX bit is cleared to “0” (receive).

The TRX bit is cleared to “0” in one of the following conditions.

- When arbitration lost is detected.
- When a STOP condition is detected.
- When occurence of a START condition is disabled by the START condition duplication prevention function (Note).
- With MST = “0” and when a START condition is detected.
- With MST = “0” and when ACK non-return is detected.
- At reset

■ **Bit 7: Communication mode specification bit (master/slave specification bit: MST)**

This bit is used for master/slave specification for data communication. When this bit is “0,” the slave is specified, so that a START condition and a STOP condition generated by the master are received, and data communication is performed in synchronization with the clock generated by the master. When this bit is “1,” the master is specified and a START condition and a STOP condition are generated, and also the clocks required for data communication are generated on the SCL.

The MST bit is cleared to “0” in one of the following conditions.

- Immediately after completion of 1-byte data transmission when arbitration lost is detected
- When a STOP condition is detected.
- When occurence of a START condition is disabled by the START condition duplication preventing function (See note).
- At reset

Note: The START condition duplication prevention function disables the following: the START condition generation; bit counter reset, and SCL output with the generation. This bit is valid from setting of BB flag to the completion of 1-byte transmittion/reception (occurrence of transmission/reception interrupt request) <IICIRQ>.

I^2Ci status register (i = 0, 1)

b7	b6	b5	b4	b3	b2	b1	b0

Symbol	Address	When reset
IIC0S1	$02E2_{16}$	$0001000?_2$
IIC1S1	$02EA_{16}$	$0001000?_2$

Bit Symbol	Bit name	Function	R	W
LRB	Last receive bit	0 : Last bit = “0” 1 : Last bit = “1” (See note 1)	○	×
AD0	General call detecting flag (See note)	0 : No general call detected 1 : General call detected (See note 1)	○	×
AAS	Slave address comparison flag (See note)	0 : Address mismatch 1 : Address match (See note 1)	○	×
AL	Arbitration lost detecting flag (See note)	0 : Not detected 1 : Detected (See note 1)	○	×
PIN	I^2C-BUS interface i interrupt request bit	0 : Interrupt request issued 1 : No interrupt request issued (See note 2)	○	×
BB	Bus busy flag	0 : Bus free 1 : Bus busy (See note 1)	○	×
TRX	Communication mode specification bits	b7b6 0 0 : Slave receive mode 0 1 : Slave transmit mode 1 0 : Master receive mode 1 1 : Master transmit mode	○	○
MST				

Notes 1: These bits and flags can be read out, but cannot be written.
2: This bit can be written only “1.”

Fig. 2.11.40 I^2Ci status register (i = 0, 1)

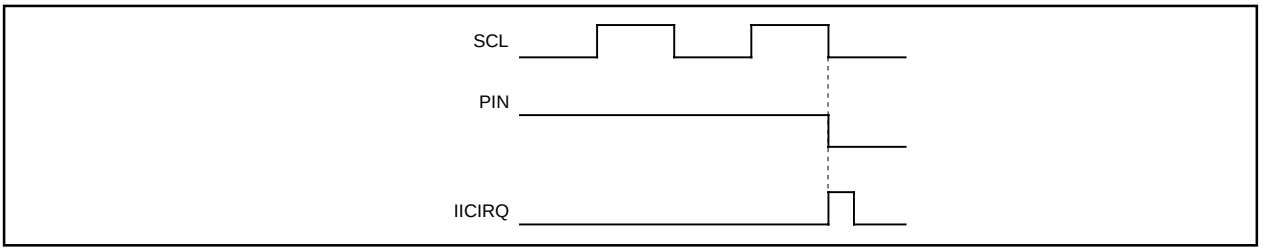

Fig. 2.11.41 Interrupt request signal generation timing

(7) START condition generation method

When the ESO bit of the I^2Ci control register is "1," execute a write instruction to the I^2Ci status register to set the MST, TRX and BB bits to "1." A START condition will then be generated. After that, the bit counter becomes "000_2" and an SCL for 1 byte is output. The START condition generation timing and BB bit set timing are different in the standard clock mode and the high-speed clock mode. Refer to Figure 2.11.42 for the START condition generation timing diagram, and Table 2.11.13 for the START condition/STOP condition generation timing table.

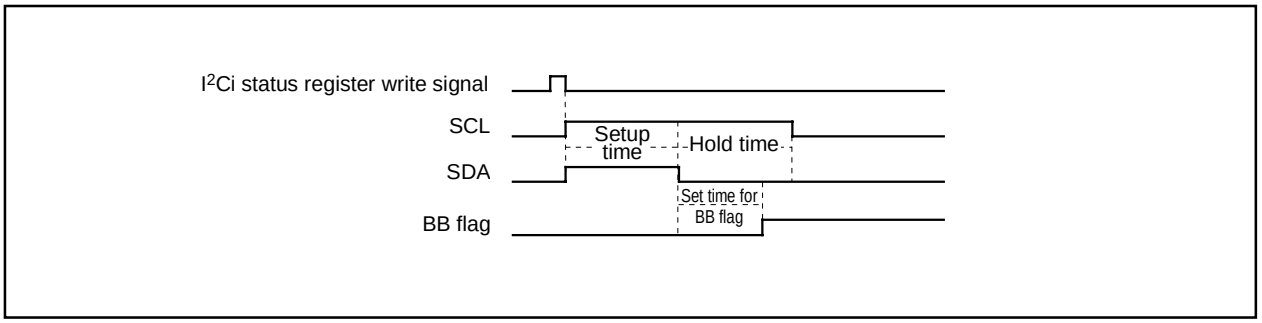

Fig. 2.11.42 START condition generation timing diagram

(8) STOP condition generation method

When the ESO bit of the I^2Ci control register is "1," execute a write instruction to the I^2Ci status register for setting the MST bit and the TRX bit to "1" and the BB bit to "0". A STOP condition will then be generated. The STOP condition generation timing and the BB flag reset timing are different in the standard clock mode and the high-speed clock mode. Refer to Figure 2.11.43 for the STOP condition generation timing diagram, and Table 2.11.13 for the START condition/STOP condition generation timing table.

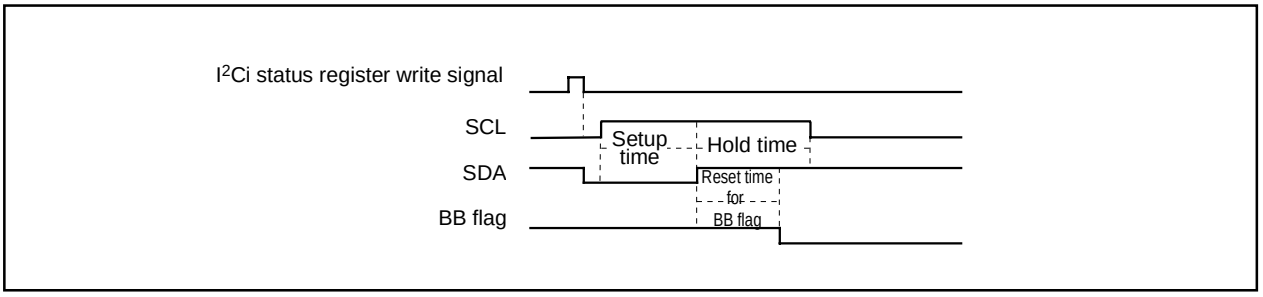

Fig. 2.11.43 STOP condition generation timing diagram

Table 2.11.13 START condition/STOP condition generation timing table

Item	Standard Clock Mode	High-speed Clock Mode
Setup time	5.35 µs (53.5 cycles)	1.85 µs (18.5 cycles)
Hold time	4.9 µs (49 cycles)	2.4 µs (24 cycles)
Set/reset time for BB flag	3.75 µs (37.5 cycles)	0.85 µs (8.5 cycles)

Note: Absolute time at BCLK = 10 MHz. The value in parentheses denotes the number of BCLK cycles.

(9) START/STOP condition detect conditions

The START/STOP condition detect conditions are shown in Figure 2.11.44 and Table 2.11.14. Only when the 3 conditions of Table 2.11.14 are satisfied, a START/STOP condition can be detected.

Note: When a STOP condition is detected in the slave mode (MST = 0), an interrupt request signal <IICIRQ> is generated to the CPU.

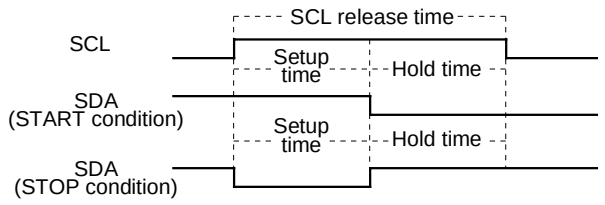

Fig. 2.11.44 START condition/STOP condition detect timing diagram

Table 2.11.14 START condition/STOP condition detect conditions

Standard Clock Mode	High-speed Clock Mode
6.5 µs (65 cycles) < SCL release time	1.0 µs (10 cycles) < SCL release time
3.25 µs (32.5 cycles) < Setup time	0.5 µs (5 cycles) < Setup time
3.25 µs (32.5 cycles) < Hold time	0.5 µs (5 cycles) < Hold time

Note: Absolute time at BCLK = 10 MHz. The value in parentheses denotes the number of BCLK cycles.

(10) Address data communication

There are two address data communication formats, namely, 7-bit addressing format and 10-bit addressing format. The respective address communication formats is described below.

■ **7-bit addressing format**

To meet the 7-bit addressing format, set the 10BIT SAD bit of the I^2Ci control register to “0.” The first 7-bit address data transmitted from the master is compared with the high-order 7-bit slave address stored in the I^2Ci address register. At the time of this comparison, address comparison of the RBW bit of the I^2Ci address register is not made. For the data transmission format when the 7-bit addressing format is selected, refer to Figure 2.11.45, (1) and (2).

■ **10-bit addressing format**

To meet the 10-bit addressing format, set the 10BIT SAD bit of the I^2Ci control register to “1.” An address comparison is made between the first-byte address data transmitted from the master and the 7-bit slave address stored in the I^2Ci address register. At the time of this comparison, an address comparison between the RBW bit of the I^2Ci address register and the R/$\overline{W}$ bit which is the last bit of the address data transmitted from the master is made. In the 10-bit addressing mode, the R/$\overline{W}$ bit which is the last bit of the address data not only specifies the direction of communication for control data but also is processed as an address data bit.

When the first-byte address data matches the slave address, the AAS bit of the I^2Ci status register is set to “1.” After the second-byte address data is stored into the I^2Ci data shift register, make an address comparison between the second-byte data and the slave address by software. When the address data of the 2nd bytes matches the slave address, set the RBW bit of the I^2Ci address register to “1” by software. This processing can match the 7-bit slave address and R/$\overline{W}$ data, which are received after a RESTART condition is detected, with the value of the I^2Ci address register. For the data transmission format when the 10-bit addressing format is selected, refer to Figure 2.11.45, (3) and (4).

(11) Example of Master Transmission

An example of master transmission in the standard clock mode, at the SCL frequency of 100 kHz and in the ACK return mode is shown below.

① Set a slave address in the high-order 7 bits of the I^2Ci address register and “0” in the RBW bit.
② Set the ACK return mode and SCL = 100 kHz by setting “85$_{16}$” in the I^2Ci clock control register.
③ Set “10$_{16}$” in the I^2Ci status register and hold the SCL at the HIGH.
④ Set a communication enable status by setting “08$_{16}$” in the I^2Ci control register.
⑤ Set the address data of the destination of transmission in the high-order 7 bits of the I^2Ci data shift register and set “0” in the least significant bit.
⑥ Set “F0$_{16}$” in the I^2Ci status register to generate a START condition. At this time, an SCL for 1 byte and an ACK clock automatically occurs.
⑦ Set transmit data in the I^2Ci data shift register. At this time, an SCL and an ACK clock automatically occurs.
⑧ When transmitting control data of more than 1 byte, repeat step ⑦.
⑨ Set “D0$_{16}$” in the I^2Ci status register. After this, if ACK is not returned or transmission ends, a STOP condition will be generated.

(12) Example of Slave Reception

An example of slave reception in the high-speed clock mode, at the SCL frequency of 400 kHz, in the ACK non-return mode, using the addressing format, is shown below.

① Set a slave address in the high-order 7 bits of the I^2Ci address register and “0” in the RBW bit.
② Set the no ACK clock mode and SCL = 400 kHz by setting “25$_{16}$” in the I^2Ci clock control register.
③ Set “10$_{16}$” in the I^2Ci status register and hold the SCL at the HIGH.
④ Set a communication enable status by setting “08$_{16}$” in the I^2Ci control register.
⑤ When a START condition is received, an address comparison is made.
⑥

•When all transmitted address are“0” (general call):
AD0 of the I^2Ci status register is set to “1”and an interrupt request signal occurs.
•When the transmitted addresses match the address set in ①:
ASS of the I^2Ci status register is set to “1” and an interrupt request signal occurs.
•In the cases other than the above:
AD0 and AAS of the I^2Ci status register are set to “0” and no interrupt request signal occurs.

⑦ Set dummy data in the I^2Ci data shift register.
⑧ When receiving control data of more than 1 byte, repeat step ⑦.
⑨ When a STOP condition is detected, the communication ends.

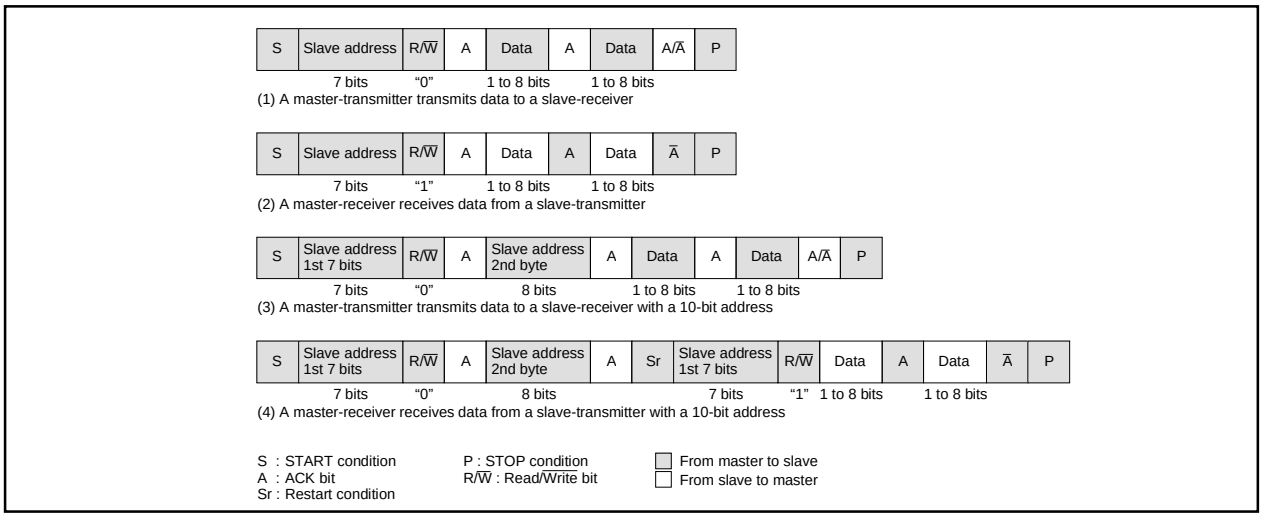

Fig. 2.11.45 Address data communication format

(13) Precautions when using multi-master I²C-BUS interface i

■ **BCLK operation mode**

Select the no-division mode and set the main clock frequency to f(XIN) = 10 MHz.

■ **Used instructions**

Specify byte (.B) as data size to access multi-master I²C-BUS interface i-related registers.

■ **Read-modify-write instruction**

The precautions when the read-modify-write instruction such as BSET, BCLR etc. is executed for each register of the multi-master I²C-BUS interface are described below.

•I²Ci data shift register (IICiS0)

When executing the read-modify-write instruction for this register during transfer, data may become a value not intended.

•I²Ci address register (IICiS0D)

When the read-modify-write instruction is executed for this register at detecting the STOP condition, data may become a value not intended. It is because hardware changes the read/write bit (RBW) at the above timing.

•I²Ci status register (IICiS1)

Do not execute the read-modify-write instruction for this register because all bits of this register are changed by hardware.

•I²Ci control register (IICiS1D)

When the read-modify-write instruction is executed for this register at detecting the START condition or at completing the byte transfer, data may become a value not intended. Because hardware changes the bit counter (BC0–BC2) at the above timing.

•I²Ci clock control register (IICiS2)

The read-modify-write instruction can be executed for this register.

•I²Ci port selection register (IICiS2D)

Since the read value of high-order 4 bits is indeterminate, the read-modify-write instruction cannot be used.

•I²Ci transmit buffer register (IICiS0S)

Since the value of all bits is indeterminate, the read-modify-write instruction cannot be used.

■ **START condition generating procedure using multi-master**

```
                :
        FCLR    I                       (Interrupt disabled)
        BTST    5, IICiS1               (BB flag confirming and branch process)
        JC      BUSBUSY
BUSFREE:
        MOV.B   SA, IICiS0              (Writing of slave address value <SA>)
        NOP
        NOP                                                                  ①   ②
MOV.B           #F0H, IICiS1            (Trigger of START condition generating)
        FSET    I                       (Interrupt enabled)
                :
BUSBUSY:
        FSETI                           (Interrupt enabled)
                :
```

① Be sure to add NOP instruction × 2 between writing the slave address value and setting trigger of START condition generating shown the above procedure example.

② When using multi-master system, disable interrupts during the following three process steps:

- BB flag confirming
- Writing of slave address value
- Trigger of START condition generating

When the condition of the BB flag is bus busy, enable interrupts immediately.

When using single-master system, it is not necessary to disable interrupts above.

■ **RESTART condition generating procedure**

```
                :
        MOV.B   SA, IICiS0S             (Writing of slave address value <SA>) —— ①
        NOP
        NOP
        MOV.B   #F0H, IICiS1            (Trigger of RESTART condition generating)
                :
```

① Use the I^2Ci transmit buffer register to write the slave address value to the I^2Ci data shift register. And also, be sure to add NOP instruction × 2.

■ **Writing to I^2Ci status register**

Do not execute an instruction to set the PIN bit to “1” from “0” and an instruction to set the MST and TRX bits to “0” from “1” simultaneously. It is because it may enter the state that the SCL pin is released and the SDA pin is released after about one machine cycle. Do not execute an instruction to set the MST and TRX bits to “0” from “1” simultaneously when the PIN bit is “1.” It is because it may become the same as above.

■ **Process of after STOP condition generating**

Do not write data in the I^2Ci data shift register (IICiS0) and the I^2Ci status register (IICiS1) until the bus busy flag BB becomes “0” after generating the STOP condition in the master mode. It is because the STOP condition waveform might not be normally generated. Reading to the above registers do not have the problem.

2.12 A-D Converter

The A-D converter consists of one 8-bit successive approximation A-D converter circuit with a capacitive coupling amplifier. Pins $P10_2$ to $P10_7$ also function as the analog signal input pins. The direction registers of these pins for A-D conversion must therefore be set to input. The Vref connect bit (bit 5 at address $03D7_{16}$) can be used to isolate the resistance ladder of the A-D converter from the reference voltage (V_{REF}) when the A-D converter is not used. Doing so stops any current flowing into the resistance ladder from V_{REF}, reducing the power dissipation. When using the A-D converter, start A-D conversion only after setting bit 5 of $03D7_{16}$ to connect V_{REF}.

The result of A-D conversion is stored in the A-D registers of the selected pins.

Table 2.12.1 shows the performance of the A-D converter. Figure 2.12.1 shows the block diagram of the A-D converter, and Figures 2.12.2 to 2.12.5 show the A-D converter-related registers.

Table 2.12.1 Performance of A-D converter

Item	Performance
Method of A-D conversion	Successive approximation (capacitive coupling amplifier)
Analog input voltage (Note 1)	0V to AV_{CC} (V_{CC})
Operating clock ϕ_{AD} (Note 2)	f_{AD}/divide-by-2 of f_{AD}/divide-by-4 of f_{AD}, $f_{AD}=f(X_{IN})$
Resolution	8-bit
Absolute precision	V_{CC} = 5V • Without sample and hold function: ±5 LSB • With sample and hold function: ±5 LSB
Operating modes	One-shot mode, repeat mode, single sweep mode, repeat sweep mode 0, and repeat sweep mode 1
Analog input pins	6 pins (AN_0 to AN_5)
A-D conversion start condition	• Software trigger A-D conversion starts when the A-D conversion start flag changes to “1”
Conversion speed per pin	• Without sample and hold function 49 ϕ_{AD} cycles • With sample and hold function 28 ϕ_{AD} cycles

Notes 1: Does not depend on use of sample and hold function.

2: Divide the frequency if $f(X_{IN})$ exceeds 10 MHz, and make ϕ_{AD} frequency equal to 10 MHz. Without sample and hold function, set the ϕ_{AD} frequency to 250kHz min.
With the sample and hold function, set the ϕ_{AD} frequency to 1MHz min.

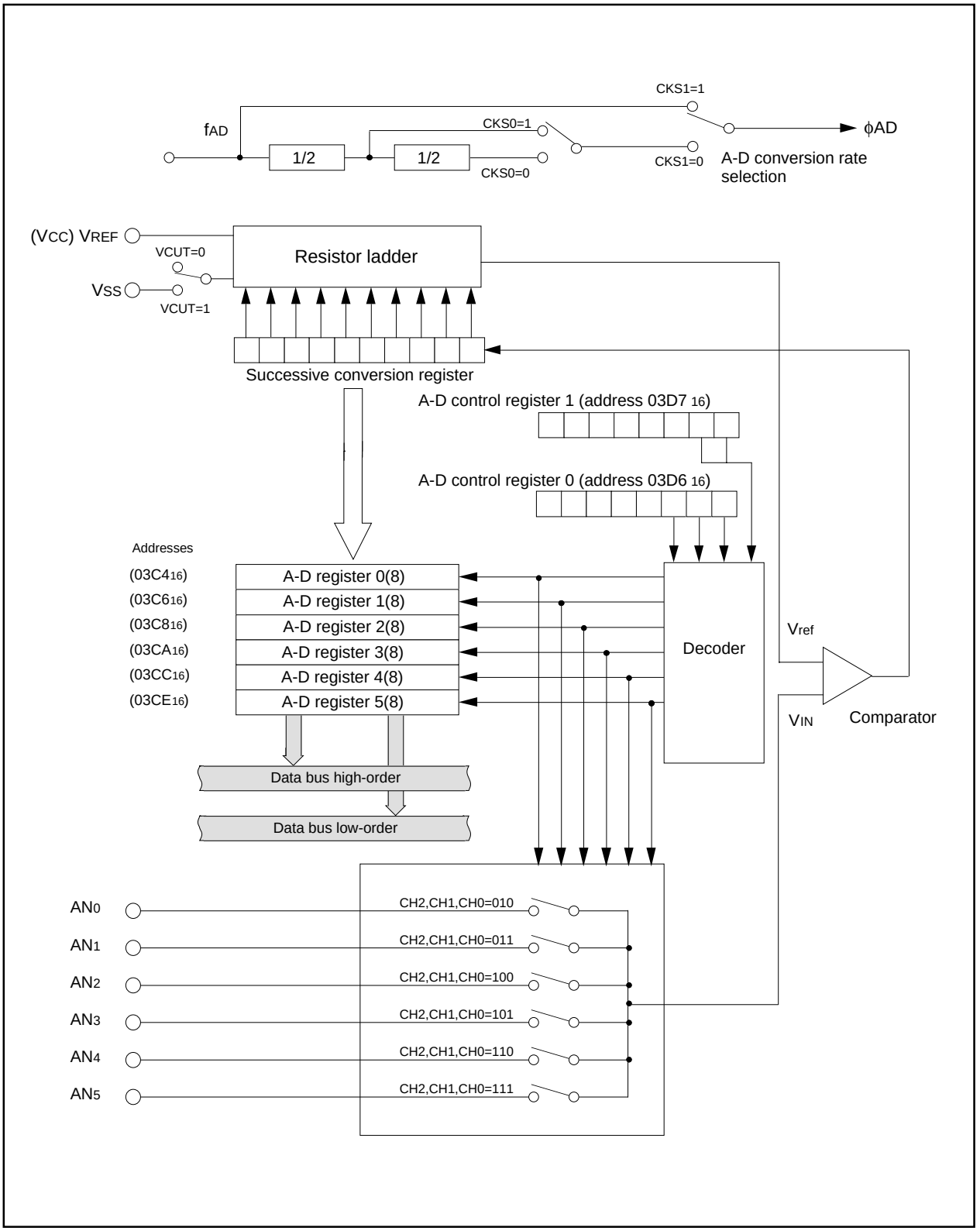

Figure 2.12.1 Block diagram of A-D converter

A-D control register 0 (Note 1)

b7	b6	b5	b4	b3	b2	b1	b0
				0			

Symbol	Address	When reset
ADCON0	$03D6_{16}$	$00000???_2$

Bit symbol	Bit name	Function	R	W
CH0	Analog input pin select bit	b2 b1 b0 0 0 0 : Do not set 0 0 1 : Do not set 0 1 0 : AN_0 is selected 0 1 1 : AN_1 is selected 1 0 0 : AN_2 is selected 1 0 1 : AN_3 is selected 1 1 0 : AN_4 is selected 1 1 1 : AN_5 is selected (Note 2)	○	○
CH1			○	○
CH2			○	○
MD0	A-D operation mode select bit 0	b4 b3 0 0 : One-shot mode 0 1 : Repeat mode 1 0 : Single sweep mode 1 1 : Repeat sweep mode 0 (Note 2) Repeat sweep mode 1	○	○
MD1			○	○
Reserved bit		Must always be set to "0"	○	○
ADST	A-D conversion start flag	0 : A-D conversion disabled 1 : A-D conversion started	○	○
CKS0	Frequency select bit 0	0 : $f_{AD}/4$ is selected 1 : $f_{AD}/2$ is selected	○	○

Notes 1: If the A-D control register is rewritten during A-D conversion, the conversion result is indeterminate.
2: When changing A-D operation mode, set analog input pin again.

Figure 2.12.2 A-D control register 0

A-D control register 1 (Note)

b7	b6	b5	b4	b3	b2	b1	b0
0	0			0			

Symbol	Address	When reset
ADCON1	$03D7_{16}$	00_{16}

Bit symbol	Bit name	Function	R	W
SCAN0	A-D sweep pin select bit	When single sweep and repeat sweep mode 0 are selected b1 b0 0 0 : Do not set 0 1 : AN_0 and AN_1 (2 pins) 1 0 : AN_0 to AN_3 (4 pins) 1 1 : AN_0 to AN_5 (6 pins) When repeat sweep mode 1 is selected b1 b0 0 0 : Do not set 0 1 : Do not set 1 0 : AN_0 (1 pin) 1 1 : AN_0 and AN_1 (2 pins)	○	○
SCAN1			○	○
MD2	A-D operation mode select bit 1	0 : Any mode other than repeat sweep mode 1 1 : Repeat sweep mode 1	○	○
Reserved bit		Most always be set to "0"	○	○
CKS1	Frequency select bit 1	0 : $f_{AD}/2$ or $f_{AD}/4$ is selected 1 : f_{AD} is selected	○	○
VCUT	Vref connect bit	0 : Vref not connected 1 : Vref connected	○	○
Reserved bits		Most always be set to "0"	○	○

Note: If the A-D control register is rewritten during A-D conversion, the conversion result is

Figure 2.12.3 A-D control register 1

A-D control register 2 (Note)

b7	b6	b5	b4	b3	b2	b1	b0
X	X	X	X	0	0	0	

Symbol	Address	When reset
ADCON2	$03D4_{16}$	$0000???0_2$

Bit symbol	Bit name	Function	R	W
SMP	A-D conversion method select bit	0 : Without sample and hold 1 : With sample and hold	○	○
Reserved bits		Must always be set to “0”	○	○
Nothing is assigned. In an attempt to write to these bits, write “0.” The value, if read, turns out to be “0.”			—	—

Note: If the A-D control register is rewritten during A-D conversion, the conversion result is indeterminate.

Figure 2.12.4 A-D control register 2

A-D register i

Symbol	Address	When reset
ADi(i=0 to 5)	$03C4_{16}$, $03C6_{16}$, $03C8_{16}$	Indeterminate
	$03CA_{16}$, $03CC_{16}$, $03CE_{16}$	Indeterminate

b7	b0

Function	R	W
Eight bits of A-D conversion result	○	×

Figure 2.12.5 A-D register i (i = 0 to 5)

2.12.1 One-shot Mode

In one-shot mode, the pin selected using the analog input pin select bit is used for one-shot A-D conversion. Table 2.12.2 shows the specifications of one-shot mode. Figures 2.12.6 and 2.12.7 show the A-D control register in one-shot mode.

Table 2.12.2 One-shot mode specifications

Item	Specification
Function	The pin selected by the analog input pin select bit is used for one A-D conversion
Start condition	Writing “1” to A-D conversion start flag
Stop condition	• End of A-D conversion • Writing “0” to A-D conversion start flag
Interrupt request generation timing	End of A-D conversion
Input pin	One of AN_0 to AN_5, as selected
Reading of result of A-D converter	Read A-D register corresponding to selected pin

A-D control register 0 (Note)

b7	b6	b5	b4	b3	b2	b1	b0
		0	0	0			

Symbol	Address	When reset
ADCON0	$03D6_{16}$	$00000???_2$

Bit symbol	Bit name	Function	R	W
CH0	Analog input pin select bit	b2 b1 b0 0 0 0 : Do not set 0 0 1 : Do not set 0 1 0 : AN_0 is selected 0 1 1 : AN_1 is selected 1 0 0 : AN_2 is selected 1 0 1 : AN_3 is selected 1 1 0 : AN_4 is selected 1 1 1 : AN_5 is selected (Note 2)	○	○
CH1			○	○
CH2			○	○
MD0	A-D operation mode select bit 0	b4 b3 0 0 : One-shot mode (Note 2)	○	○
MD1			○	○
Reserved bit		Must always be set to "0"	○	○
ADST	A-D conversion start flag	0 : A-D conversion disabled 1 : A-D conversion started	○	○
CKS0	Frequency select bit 0	0: $f_{AD}/4$ is selected 1: $f_{AD}/2$ is selected	○	○

Notes 1: If the A-D control register is rewritten during A-D conversion, the conversion result is indeterminate.
2: When changing A-D operation mode, it is necessary to set analog input pins again.

Figure 2.12.6 A-D control register 0 in one-shot mode

A-D control register 1 (Note)

b7	b6	b5	b4	b3	b2	b1	b0
0	0	1		0	0		

Symbol	Address	When reset
ADCON1	$03D7_{16}$	00_{16}

Bit symbol	Bit name	Function	R	W
SCAN0	A-D sweep pin select bit	Invalid in one-shot mode	○	○
SCAN1			○	○
MD2	A-D operation mode select bit 1	0 : Any mode other than repeat sweep mode 1	○	○
Reserved bit		Must always be set to "0"	○	○
CKS1	Frequency select bit1	0 : $f_{AD}/2$ or $f_{AD}/4$ is selected 1 : f_{AD} is selected	○	○
VCUT	Vref connect bit	1 : Vref connected	○	○
Reserved bits		Must always be set to "0"	○	○

Note: If the A-D control register is rewritten during A-D conversion, the conversion result is indeterminate.

Figure 2.12.7 A-D control register 1 in one-shot mode

2.12.2 Repeat Mode

In repeat mode, the pin selected using the analog input pin select bit is used for repeated A-D conversion. Table 2.12.3 shows the specifications of repeat mode. Figures 2.12.8 and 2.12.9 show the A-D control register in repeat mode.

Table 2.12.3 Repeat mode specifications

Item	Specification
Function	The pin selected by the analog input pin select bit is used for repeated A-D conversion
Star condition	Writing “1” to A-D conversion start flag
Stop condition	Writing “0” to A-D conversion start flag
Interrupt request generation timing	None generated
Input pin	One of AN_0 to AN_5, as selected
Reading of result of A-D converter	Read A-D register corresponding to selected pin

A-D control register 0 (Note)

b7	b6	b5	b4	b3	b2	b1	b0
		0	0	1			

Symbol	Address	When reset
ADCON0	$03D6_{16}$	$00000???_{2}$

Bit symbol	Bit name	Function	R	W
CH0	Analog input pin select bit	b2 b1 b0 0 0 0 : Do not set 0 0 1 : Do not set 0 1 0 : AN_0 is selected 0 1 1 : AN_1 is selected 1 0 0 : AN_2 is selected 1 0 1 : AN_3 is selected 1 1 0 : AN_4 is selected 1 1 1 : AN_5 is selected (Note 2)	○	○
CH1			○	○
CH2			○	○
MD0	A-D operation mode select bit 0	b4 b3 0 1 : Repeat mode (Note 2)	○	○
MD1			○	○
Reserved bit		Must always be set to “0”	○	○
ADST	A-D conversion start flag	0 : A-D conversion disabled 1 : A-D conversion started	○	○
CKS0	Frequency select bit 0	0 : $f_{AD}/4$ is selected 1 : $f_{AD}/2$ is selected	○	○

Notes 1: If the A-D control register is rewritten during A-D conversion, the conversion result is indeterminate.
2: When changing A-D operation mode, it is necessary to set analog input pins again.

Figure 2.12.8 A-D conversion register 0 in repeat mode

A-D control register 1 (Note)

b7	b6	b5	b4	b3	b2	b1	b0
0	0	1		0	0		

Symbol	Address	When reset
ADCON1	$03D7_{16}$	00_{16}

Bit symbol	Bit name	Function	R	W
SCAN0	A-D sweep pin select bit	Invalid in repeat mode	○	○
SCAN1			○	○
MD2	A-D operation mode select bit 1	0 : Any mode other than repeat sweep mode 1	○	○
Reserved bit		Most always be set to “0”	○	○
CKS1	Frequency select bit 1	0 : $f_{AD}/2$ or $f_{AD}/4$ is selected 1 : f_{AD} is selected	○	○
VCUT	Vref connect bit	1 : Vref connected	○	○
Reserved bits		Most always be set to “0”	○	○

Note: If the A-D control register is rewritten during A-D conversion, the conversion result is indeterminate.

Figure 2.12.9 A-D conversion register 1 in repeat mode

2.12.3 Single Sweep Mode

In single sweep mode, the pins selected using the A-D sweep pin select bit are used for one-by-one A-D conversion. Table 2.12.4 shows the specifications of single sweep mode. Figures 2.12.10 and 2.12.11 show the A-D control register in single sweep mode.

Table 2.12.4 Single sweep mode specifications

Item	Specification
Function	The pins selected by the A-D sweep pin select bit are used for one-by-one A-D conversion
Start condition	Writing “1” to A-D converter start flag
Stop condition	• End of A-D conversion • Writing “0” to A-D conversion start flag
Interrupt request generation timing	End of A-D conversion
Input pin	AN_0 and AN_1 (2 pins), AN_0 to AN_3 (4 pins), AN_0 to AN_5 (6 pins)
Reading of result of A-D converter	Read A-D register corresponding to selected pin

A-D control register 0 (Note)

b7	b6	b5	b4	b3	b2	b1	b0
		0	1	0			

Symbol	Address	When reset
ADCON0	$03D6_{16}$	$00000???_2$

Bit symbol	Bit name	Function	R	W
CH0	Analog input pin select bit	Invalid in single sweep mode	○	○
CH1			○	○
CH2			○	○
MD0	A-D operation mode select bit 0	b4 b3 1 0 : Single sweep mode	○	○
MD1			○	○
Reserved bit		Must always be set to "0"	○	○
ADST	A-D conversion start flag	0 : A-D conversion disabled 1 : A-D conversion started	○	○
CKS0	Frequency select bit 0	0 : $f_{AD}/4$ is selected 1 : $f_{AD}/2$ is selected	○	○

Note: If the A-D control register is rewritten during A-D conversion, the conversion result is indeterminate.

Figure 2.12.10 A-D control register 0 in single sweep mode

A-D control register 1 (Note 1)

b7	b6	b5	b4	b3	b2	b1	b0
0	0	1		0	0		

Symbol	Address	When reset
ADCON1	$03D7_{16}$	00_{16}

Bit symbol	Bit name	Function	R	W
SCAN0	A-D sweep pin select bit	When single sweep and repeat sweep mode 0 are selected b1 b0 0 0 : Do not set 0 1 : AN_0 and AN_1 (2 pins) 1 0 : AN_0 to AN_3 (4 pins) 1 1 : AN_0 to AN_5 (6 pins)	○	○
SCAN1			○	○
MD2	A-D operation mode select bit 1	0 : Any mode other than repeat sweep mode 1	○	○
Reserved bit		Must always be set to "0"	○	○
CKS1	Frequency select bit 1	0 : $f_{AD}/2$ or $f_{AD}/4$ is selected 1 : f_{AD} is selected	○	○
VCUT	Vref connect bit	1 : Vref connected	○	○
Reserved bits		Must always be set to "0"	○	○

Note: If the A-D control register is rewritten during A-D conversion, the conversion result is indeterminate.

Figure 2.12.11 A-D control register 1 in single sweep mode

2.12.4 Repeat Sweep Mode 0

In repeat sweep mode 0, the pins selected using the A-D sweep pin select bit are used for repeat sweep A-D conversion. Table 2.12.5 shows the specifications of repeat sweep mode 0. Figures 2.12.12 and 2.12.13 show the A-D control register in repeat sweep mode 0.

Table 2.12.5 Repeat sweep mode 0 specifications

Item	Specification
Function	The pins selected by the A-D sweep pin select bit are used for repeat sweep A-D conversion
Start condition	Writing “1” to A-D conversion start flag
Stop condition	Writing “0” to A-D conversion start flag
Interrupt request generation timing	None generated
Input pin	AN_0 and AN_1 (2 pins), AN_0 to AN_3 (4 pins), AN_0 to AN_5 (6 pins)
Reading of result of A-D converter	Read A-D register corresponding to selected pin (at any time)

A-D control register 0 (Note)

b7	b6	b5	b4	b3	b2	b1	b0
		0	1	1			

Symbol	Address	When reset
ADCON0	$03D6_{16}$	$00000???_{2}$

Bit symbol	Bit name	Function	R	W
CH0	Analog input pin select bit	Invalid in repeat sweep mode 0	○	○
CH1			○	○
CH2			○	○
MD0	A-D operation mode select bit 0	b4 b3 1 1 : Repeat sweep mode 0	○	○
MD1			○	○
Reserved bit		Must always be set to “0”	○	○
ADST	A-D conversion start flag	0 : A-D conversion disabled 1 : A-D conversion started	○	○
CKS0	Frequency select bit 0	0 : $f_{AD}/4$ is selected 1 : $f_{AD}/2$ is selected	○	○

Note: If the A-D control register is rewritten during A-D conversion, the conversion result is indeterminate.

Figure 2.12.12 A-D control register 0 in repeat sweep mode 0

A-D control register 1 (Note)

b7	b6	b5	b4	b3	b2	b1	b0
0	0	1		0	0		

Symbol	Address	When reset
ADCON1	$03D7_{16}$	00_{16}

Bit symbol	Bit name	Function	R	W
SCAN0	A-D sweep pin select bit	When single sweep and repeat sweep mode 0 are selected b1 b0 0 0 : Do not set 0 1 : AN_0 and AN_1 (2 pins) 1 0 : AN_0 to AN_3 (4 pins) 1 1 : AN_0 to AN_5 (6 pins)	○	○
SCAN1			○	○
MD2	A-D operation mode select bit 1	0 : Any mode other than repeat sweep mode 1	○	○
Reserved bit		Must always be set to “0”	○	○
CKS1	Frequency select bit 1	0 : $f_{AD}/2$ or $f_{AD}/4$ is selected 1 : f_{AD} is selected	○	○
VCUT	Vref connect bit	1 : Vref connected	○	○
Reserved bits		Must always be set to “0”	○	○

Note: If the A-D control register is rewritten during A-D conversion, the conversion result is indeterminate.

Figure 2.12.13 A-D control register 1 in repeat sweep mode 0

2.12.5 Repeat Sweep Mode 1

In repeat sweep mode 1, all pins are used for A-D conversion with emphasis on the pin or pins selected using the A-D sweep pin select bit. Table 2.12.6 shows the specifications of repeat sweep mode 1. Figures 2.12.14 and 2.12.15 show the A-D control register in repeat sweep mode 1.

Table 2.12.6 Repeat sweep mode 1 specifications

Item	Specification
Function	All pins perform repeat sweep A-D conversion, with emphasis on the pin or pins selected by the A-D sweep pin select bit Example : AN_0 selected $AN_0 \rightarrow AN_1 \rightarrow AN_0 \rightarrow AN_2 \rightarrow AN_0 \rightarrow AN_3$, etc
Start condition	Writing “1” to A-D conversion start flag
Stop condition	Writing “0” to A-D conversion start flag
Interrupt request generation timing	None generated
Input pin	AN_0 (1 pin), AN_0 and AN_1 (2 pins)
Reading of result of A-D converter	Read A-D register corresponding to selected pin (at any time)

A-D control register 0 (Note)

b7	b6	b5	b4	b3	b2	b1	b0
		0	1	1			

Symbol	Address	When reset
ADCON0	$03D6_{16}$	$00000???_2$

Bit symbol	Bit name	Function	R	W
CH0	Analog input pin select bit	Invalid in repeat sweep mode 1	○	○
CH1			○	○
CH2			○	○
MD0	A-D operation mode select bit 0	b4 b3 1 1 : Repeat sweep mode 1	○	○
MD1			○	○
Reserved bit		Must always be set to “0”	○	○
ADST	A-D conversion start flag	0 : A-D conversion disabled 1 : A-D conversion started	○	○
CKS0	Frequency select bit 0	0 : $f_{AD}/4$ is selected 1 : $f_{AD}/2$ is selected	○	○

Note: If the A-D control register is rewritten during A-D conversion, the conversion result is indeterminate.

Figure 2.12.14 A-D control register 0 in repeat sweep mode 1

A-D control register 1 (Note)

b7	b6	b5	b4	b3	b2	b1	b0
0	0	1		0	1		

Symbol	Address	When reset
ADCON1	$03D7_{16}$	00_{16}

Bit symbol	Bit name	Function	R	W
SCAN0	A-D sweep pin select bit	When repeat sweep mode 1 is selected b1 b0 0 0 : Do not set 0 1 : Do not set 1 0 : AN_0 (1 pin) 1 1 : AN_0 and AN_1 (2 pins)	○	○
SCAN1			○	○
MD2	A-D operation mode select bit 1	1 : Repeat sweep mode 1	○	○
Reserved bit		Must always be set to “0”	○	○
CKS1	Frequency select bit 1	0 : $f_{AD}/2$ or $f_{AD}/4$ is selected 1 : f_{AD} is selected	○	○
VCUT	Vref connect bit	1 : Vref connected	○	○
Reserved bits		Must always be set to “0”	○	○

Note : If the A-D control register is rewritten during A-D conversion, the conversion result is indeterminate.

Figure 2.12.15 A-D control register 1 in repeat sweep mode 1

2.12.6 Sample and Hold

Sample and hold is selected by setting bit 0 of the A-D control register 2 (address $03D4_{16}$) to “1”. When sample and hold is selected, the rate of conversion of each pin increases. As a result, a 28 ϕ_{AD} cycle is achieved. Sample and hold can be selected in all modes. However, in all modes, be sure to specify before starting A-D conversion whether sample and hold is to be used.

2.13 D-A Converter

This is an 8-bit, R-2R type D-A converter. The microcomputer contains two independent D-A converters of this type.

D-A conversion is performed when a value is written to the corresponding D-A register. Bits 0 and 1 (D-A output enable bits) of the D-A control register decide if the result of conversion is to be output. Do not set the target port to output mode if D-A conversion is to be performed.

Output analog voltage (V) is determined by a set value (n : decimal) in the D-A register.

$$V = V_{REF} \times n / 256 \quad (n = 0 \text{ to } 255)$$

V_{REF} : reference voltage

Table 2.13.1 lists the performance of the D-A converter. Figure 2.13.1 shows the block diagram of the D-A converter. Figure 2.13.2 shows the A-D control register, Figure 2.13.3 shows the D-A register and Figure 2.13.4 shows the D-A converter equivalent circuit.

Table 2.13.1 Performance of D-A converter

Item	Performance
Conversion method	R-2R method
Resolution	8 bits
Analog output pin	2 channels

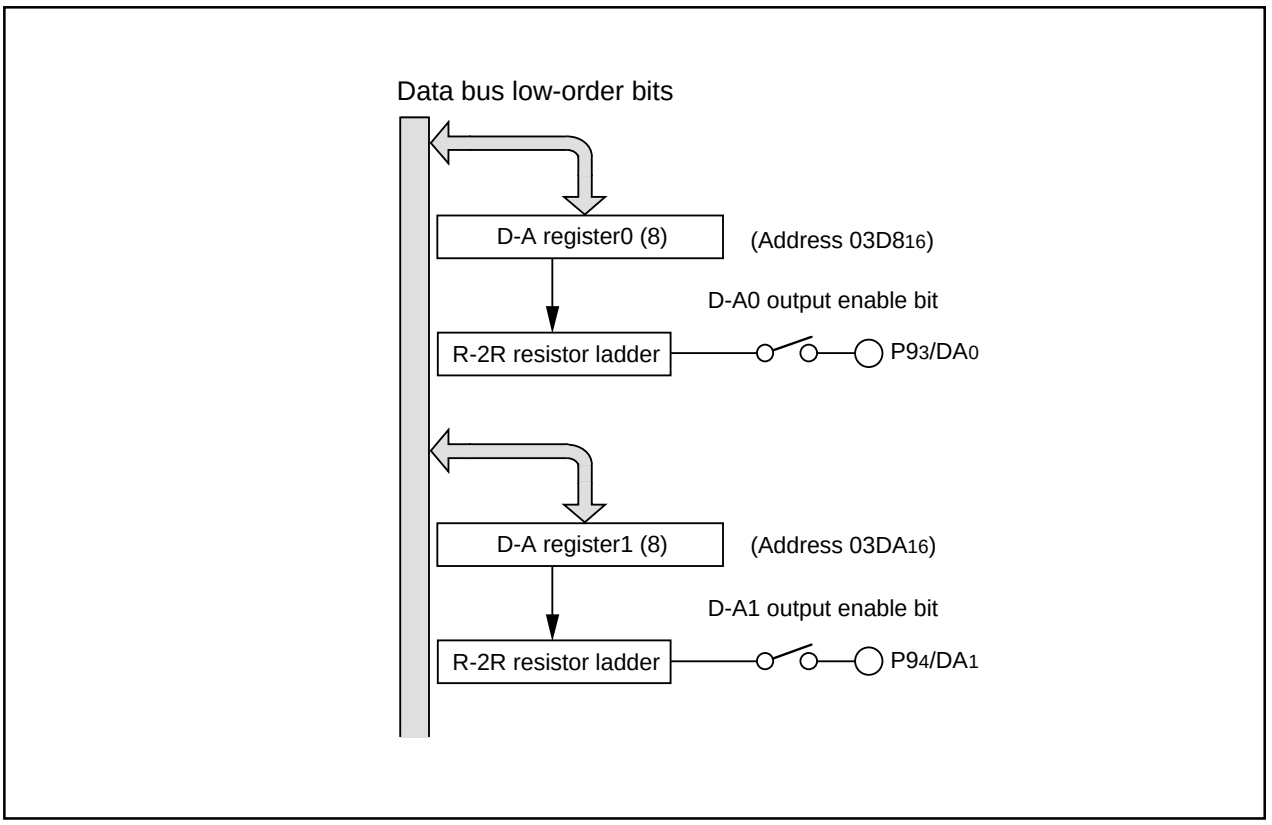

Figure 2.13.1 Block diagram of D-A converter

D-A control register

b7	b6	b5	b4	b3	b2	b1	b0

Symbol	Address	When reset
DACON	03DC16	0016

Bit symbol	Bit name	Function	R	W
DA0E	D-A0 output enable bit	0 : Output disabled 1 : Output enabled	○	○
DA1E	D-A1 output enable bit	0 : Output disabled 1 : Output enabled	○	○
Nothing is assigned. In an attempt to write to these bits, write “0.” The value, if read, turns out to be “0.”			—	—

Figure 2.13.2 D-A control register

D-A register i (i = 0, 1)

b7	b0

Symbol	Address	When reset
DAi (i = 0,1)	03D816, 03DA16	Indeterminate

Function	R	W
Output value of D-A conversion	○	○

Figure 2.13.3 D-A register i (i = 0 and 1)

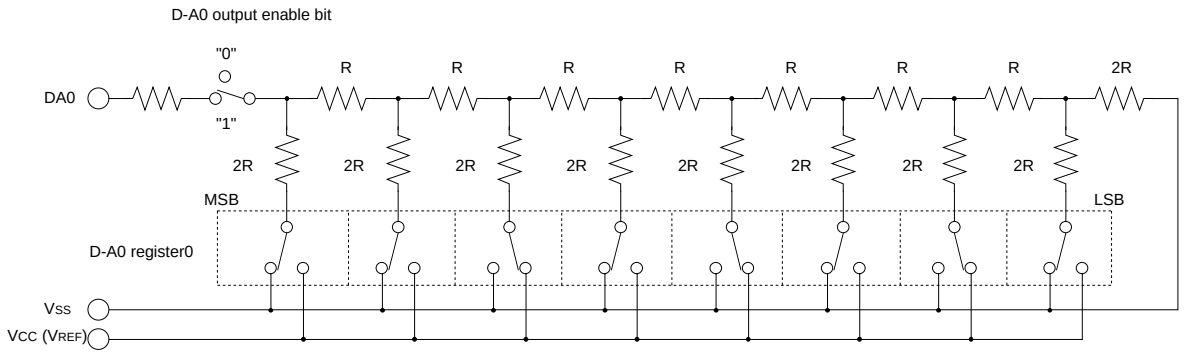

Note 1: The above diagram shows an instance in which the D-A register is assigned 2A16.
2: The same circuit as this is also used for D-A1.
3: To reduce the current consumption when the D-A converter is not used, set the D-A output enable bit to 0 and set the D-A register to 0016 so that no current flows in the resistors Rs and 2Rs.

Figure 2.13.4 D-A converter equivalent circuit

2.14 Data Slicer

This microcomputer includes the data slicer function for the closed caption decoder (referred to as the CCD). This function takes out the caption data superimposed in the vertical blanking interval of a composite video signal. A composite video signal which makes the sync tip's polarity negative is input to the CV_{IN} pin. When the data slicer function is not used, the data slicer circuit and the timing signal generating circuit can be cut off by setting bit 0 of the data slicer control register 1 (address 0260_{16}) to "0." These settings can realize the low-power dissipation.

Note: When using the data slicer, set bit 7 of the peripheral mode register (address $027D_{16}$) according to the main clock frequency.

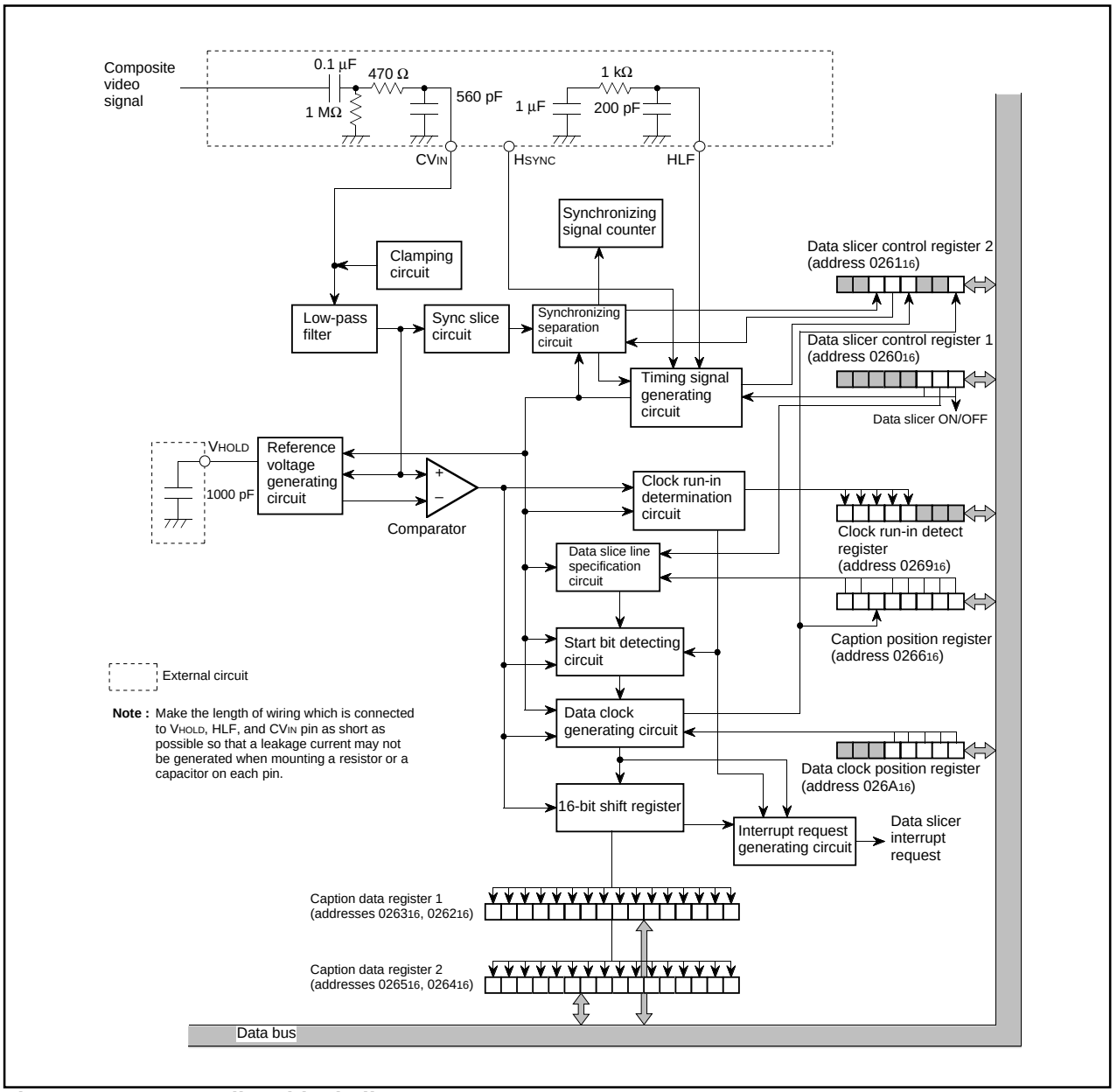

Figure 2.14.1 Data slicer block diagram

2.14.1 Notes when not Using Data Slicer

When bit 0 of data slicer control register 1 (address 0260_{16}) is “0,” terminate the pins as shown in Figure 2.14.2

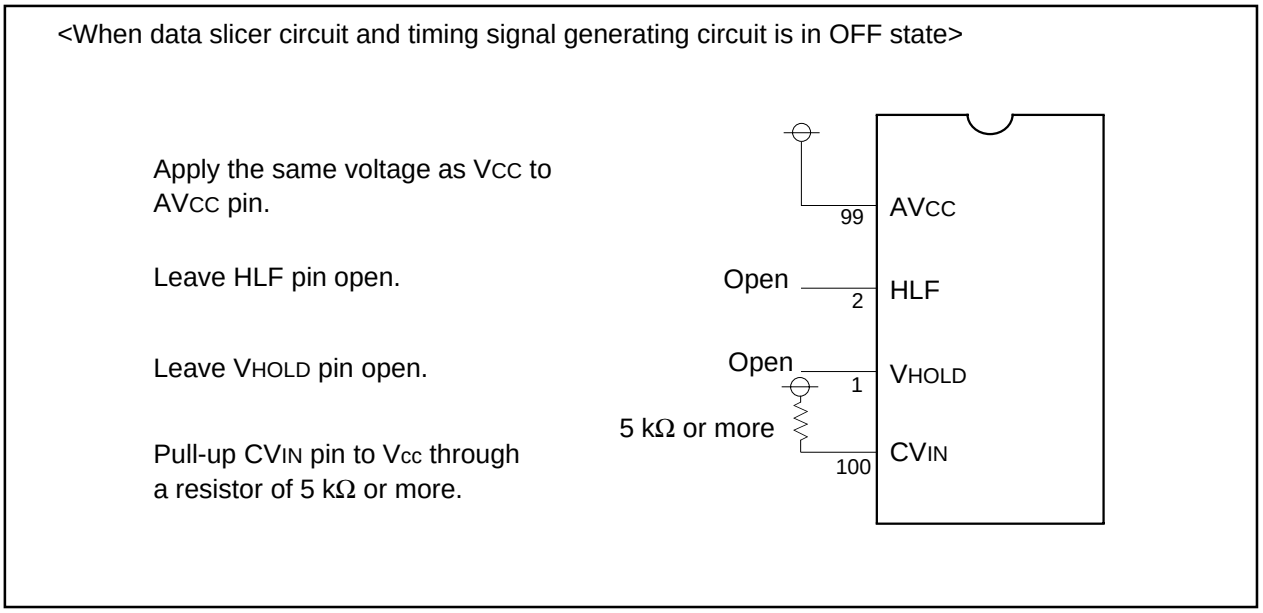

Figure 2.14.2 Termination of data slicer input/output pins when data slicer circuit and timing generating circuit is in OFF state

When both bits 0 and 2 of data slicer control register 1 (address 0260_{16}) are “1,” terminate the pins as shown in Figure 2.14.3.

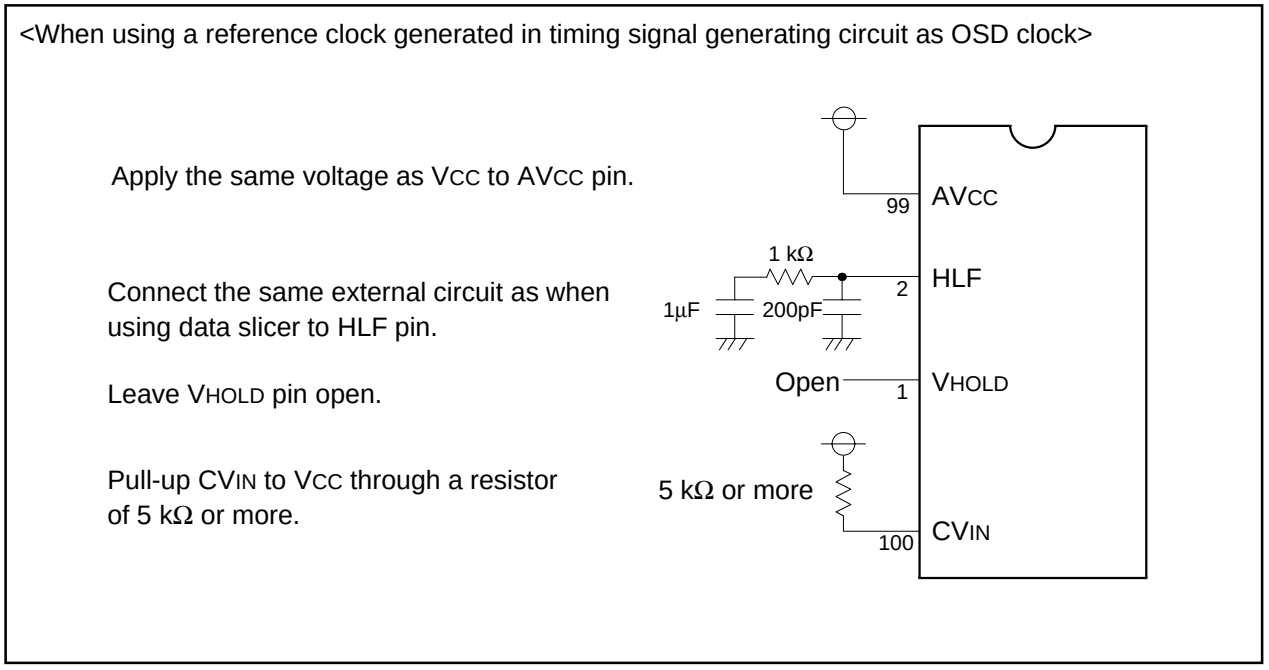

Figure 2.14.3 Termination of data slicer input/output pins when timing signal generating circuit is in ON state

Figures 2.14.4 and 2.14.5 the data slicer control registers.

Data slicer control register 1

b7	b6	b5	b4	b3	b2	b1	b0
0	0	0	0	0			

Symbol	Address	When reset
DSC1	0260_{16}	00_{16}

Bit symbol	Bit name	Function	R	W
DSC10	Data slicer and timing signal generating circuit control bit	0: Stopped 1: Operating	○	○
DSC11	Selection bit of data slice reference voltage generating field	0: F2 1: F1	○	○
DSC12	Reference clock source selection bit	0: Video signal 1: HSYNC signal	○	○
Reserved bits		Must always be set to “0”	○	○

Definition of fields 1 (F1) and 2 (F2)

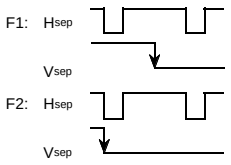

Figure 2.14.4 Data slicer control register 1

Data slicer control register 2

b7	b6	b5	b4	b3	b2	b1	b0
	0					0	

Symbol	Address	When reset
DSC2	0261_{16}	$?0?0??0?_{2}$

Bit symbol	Bit name	Function	R	W
DSC20	Caption data latch completion flag 1	0: Data is not latched yet and a clock-run-in is not determined. 1: Data is latched and a clock-run-in is determined.	○	×
Reserved bit		Must always be set to “0”	○	○
Test bit		Read-only	○	×
DSC23	Field determination flag	0: F2 1: F1	○	×
DSC24	Vertical synchronous signal (V_{sep}) generating method selection bit	0: Method (1) 1: Method (2)	○	○
DSC25	V-pulse shape determination flag	0: Match 1: Mismatch	○	×
Reserved bit		Must always be set to “0”	○	○
Test bit		Read-only	○	×

Definition of fields 1 (F1) and 2 (F2)

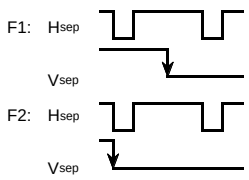

Figure 2.14.5 Data slicer control register 2

2.14.2 Clamping Circuit and Low-pass Filter

The clamp circuit clamps the sync.tip part of the composite video signal input from the CV_{IN} pin. The low-pass filter attenuates the noise of clamped composite video signal. The CV_{IN} pin to which composite video signal is input requires a capacitor (0.1 μF) coupling outside. Pull down the CV_{IN} pin with a resistor of hundreds of kiloohms to 1 MΩ. In addition, we recommend to install externally a simple low-pass filter using a resistor and a capacitor at the CV_{IN} pin (refer to Figure 2.14.1).

2.14.3 Sync Slice Circuit

This circuit takes out a composite sync signal from the output signal of the low-pass filter.

2.14.4 Synchronous Signal Separation Circuit

This circuit separates a horizontal synchronous signal and a vertical synchronous signal from the composite sync signal taken out in the sync slice circuit.

(1) Horizontal synchronous signal (H_{sep})

A one-shot horizontal synchronizing signal Hsep is generated at the falling edge of the composite sync signal.

(2) Vertical synchronous signal (V_{sep})

As a Vsep signal generating method, it is possible to select one of the following 2 methods by using bit 4 of the data slicer control register 2 (address 026_{16}).

- Method 1 The “L” level width of the composite sync signal is measured. If this width exceeds a certain time, a V_{sep} signal is generated in synchronization with the rising of the timing signal immediately after this “L” level.
- Method 2 The “L” level width of the composite sync signal is measured. If this width exceeds a certain time, it is detected whether a falling of the composite sync signal exits or not in the “L” level period of the timing signal immediately after this “L” level. If a falling exists, a V_{sep} signal is generated in synchronization with the rising of the timing signal (refer to Figure 2.14.6).

Figure 2.14.6 shows a V_{sep} generating timing. The timing signal shown in the figure is generated from the reference clock which the timing generating circuit outputs.

Reading bit 5 of data slicer control register 2 permits determinating the shape of the V-pulse portion of the composite sync signal. As shown in Figure 2.14.7, when the A level matches the B level, this bit is “0.” In the case of a mismatch, the bit is “1.”

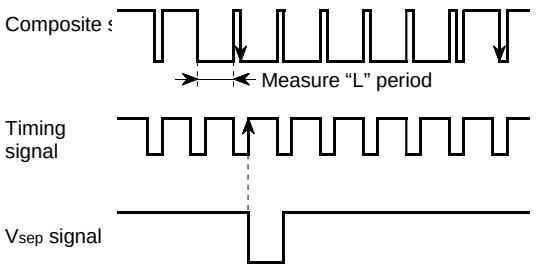

A V_{sep} signal is generated at a rising of the timing signal immediately after the “L” level width of the composite sync signal exceeds a certain time.

Figure 2.14.6 V_{sep} generating timing (method 2)

2.14.5 Timing Signal Generating Circuit

This circuit generates a reference clock which is 832 times as large as the horizontal synchronous signal frequency. It also generates various timing signals on the basis of the reference clock, horizontal synchronous signal and vertical synchronizing signal. The circuit operates by setting bit 0 of data slicer control register 1 (address 0260_{16}) to “1.”

The reference clock can be used as a display clock for OSD function in addition to the data slicer. The H_{SYNC} signal can be used as a count source instead of the composite sync signal. However, when the H_{SYNC} signal is selected, the data slicer cannot be used. A count source of the reference clock can be selected by bit 2 of data slicer control register 1 (address 0260_{16}).

For the pins HLF, connect a resistor and a capacitor as shown in Figure 2.14.1 Make the length of wiring which is connected to these pins as short as possible so that a leakage current may not be generated.

Note: It takes a few tens of milliseconds until the reference clock becomes stable after the data slicer and the timing signal generating circuit are started. In this period, various timing signals, H_{sep} signals and V_{sep} signals become unstable. For this reason, take stabilization time into consideration when programming.

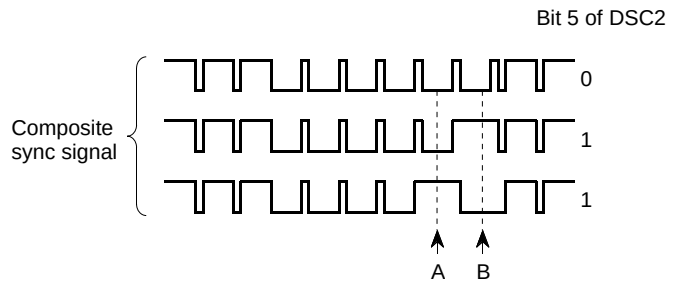

Figure 2.14.7 Determination of v-pulse waveform

2.14.6 Data Slice Line Specification Circuit

(1) Specification of data slice line

This circuit decides a line on which caption data is superimposed. The line 21 (fixed), 1 appropriate line for a period of 1 field (total 2 line for a period of 1 field), and both fields (F1 and F2) are sliced their data. The caption position register (address 0266_{16}) is used for each setting (refer to Table 2.14.1). The counter is reset at the falling edge of V_{sep} and is incremented by 1 every Hsep pulse. When the counter value matched the value specified by bits 4 to 0 of the caption position register, this H_{sep} is sliced.

The values of "00_{16}" to "$1F_{16}$" can be set in the caption position register (at setting only 1 appropriate line). Figure 2.14.8 shows the signals in the vertical blanking interval. Figure 2.14.9 shows the caption position register.

(2) Specification of line to set slice voltage

The reference voltage for slicing (slice voltage) is generated for the clock run-in pulse in the particular line (refer to Table 2.14.1). The field to generate slice voltage is specified by bit 1 of data slicer control register 1. The line to generate slice voltage 1 field is specified by bits 6, 7 of the caption position register (refer to Table 2.14.1).

(3) Field determination

The field determination flag can be read out by bit 3 of data slicer control register 2. This flag change at the falling edge of V_{sep}.

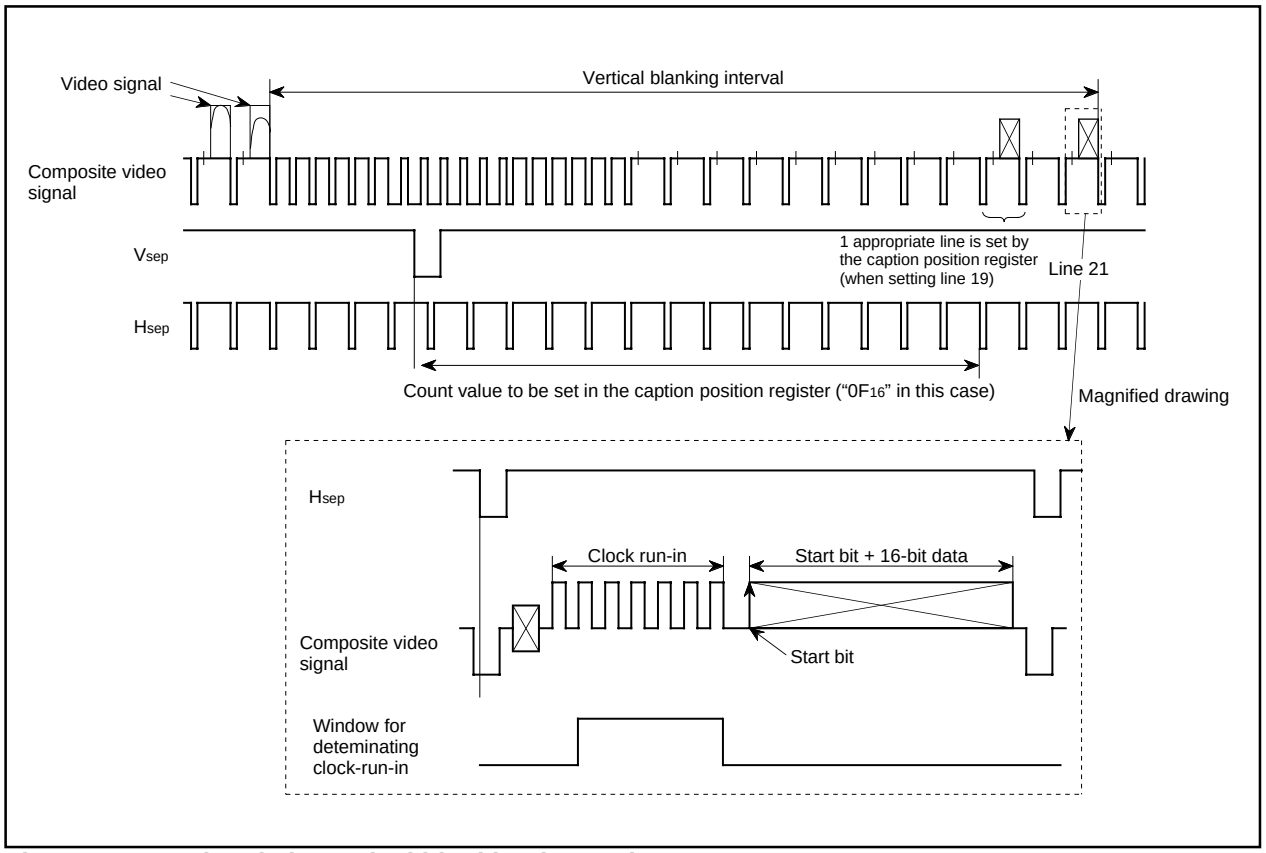

Figure 2.14.8 Signals in vertical blanking interval

Caption position register

b7	b6	b5	b4	b3	b2	b1	b0

Symbol	Address	When reset
CPS	0266_{16}	$00?00000_{2}$

Bit symbol	Bit name	Function	R	W
CPS0	Caption position bits		○	○
CPS1			○	○
CPS2			○	○
CPS3			○	○
CPS4			○	○
CPS5	Caption data latch completion flag 2	0: Data is not latched yet and a clock-run-in is not determined. 1: Data is latched and a clock-run-in is determined.	○	×
CPS6	Slice line mode specification bits (in 1 field)	Refer to the corresponding table (Table 2.14.1).	○	○
CPS7			○	○

Figure 2.14.9 Caption position register

Table 2.14.1 Specification of data slice line

CPS		Field and Line to Be Sliced Data	Field and Line to Generate Slice Voltage
b7	b6		
0	0	• Both fields of F1 and F2 • Line 21 and a line specified by bits 4 to 0 of CPS (total 2 lines) (See note 2)	• Field specified by bit 1 of DSC1 • Line 21 (total 1 line)
0	1	• Both fields of F1 and F2 • A line specified by bits 4 to 0 of CPS (total 1 line) (See note 3)	• Field specified by bit 1 of DSC1 • A line specified by bits 4 to 0 of CPS (total 1 line) (See note 3)
1	0	• Both fields of F1 and F2 • Line 21 (total 1 line)	• Field specified by bit 1 of DSC1 • Line 21 (total 1 line)
1	1	• Both fields of F1 and F2 • Line 21 and a line specified by bits 4 to 0 of CPS (total 2 lines) (See note 2)	• Field specified by bit 1 of DSC1 • Line 21 and a line specified by bits 4 to 0 of CPS (total 2 lines) (See note 2)

Notes 1: DSC is data slicer control register 1.
CPS is caption position register.
2: Set “00_{16}” to “10_{16}” to bits 4 to 0 of CPS.
3: Set “00_{16}” to “$1F_{16}$” to bits 4 to 0 of CPS.

2.14.7 Reference Voltage Generating Circuit and Comparator

The composite video signal clamped by the clamping circuit is input to the reference voltage generating circuit and the comparator.

(1) Reference voltage generating circuit

This circuit generates a reference voltage (slice voltage) by using the amplitude of the clock run-in pulse in line specified by the data slice line specification circuit. Connect a capacitor between the VHOLD pin and the VSS pin, and make the length of wiring as short as possible so that a leakage current may not be generated.

(2) Comparator

The comparator compares the voltage of the composite video signal with the voltage (reference voltage) generated in the reference voltage generating circuit, and converts the composite video signal into a digital value.

2.14.8 Start Bit Detecting Circuit

This circuit detects a start bit at line decided in the data slice line specification circuit.

The detection of a start bit is described below.

① A sampling clock is generated by dividing the reference clock output by the timing signal.

② A clock run-in pulse is detected by the sampling clock.

③ After detection of the pulse, a start bit pattern is detected from the comparator output.

2.14.9 Clock Run-in Determination Circuit

This circuit determinates clock run-in by counting the number of pulses in a window of the composite video signal.

The reference clock count value in one pulse cycle is stored in bits 3 to 7 of the clock run-in detect register (address 0269_{16}). Read out these bits after the occurrence of a data slicer interrupt (refer to 2.14.12 Interrupt request generating circuit).

Figure 2.14.10 shows the structure of clock run-in detect register.

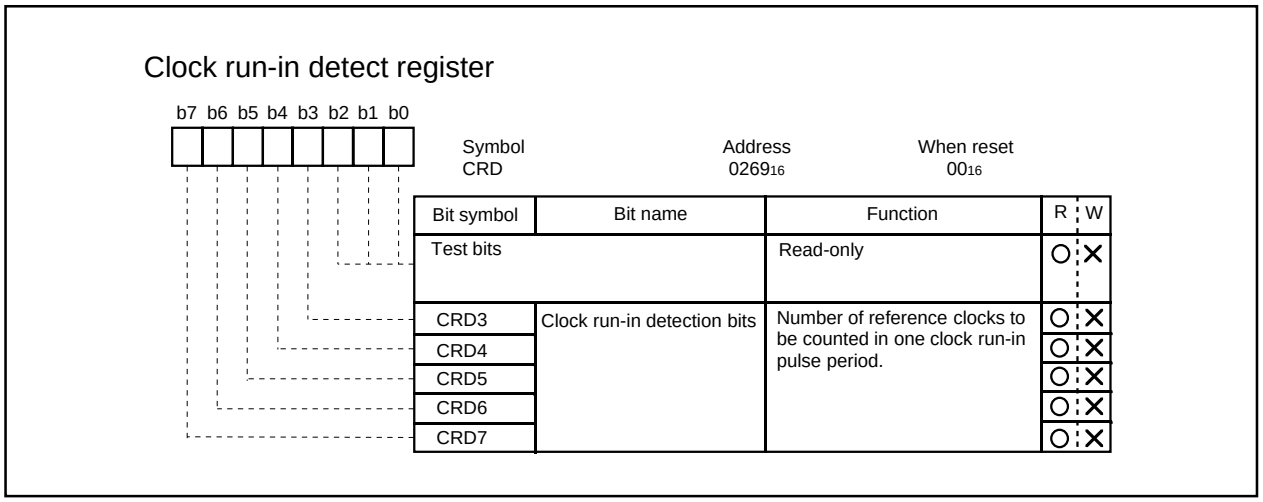

Figure 2.14.10 Clock run-in detect register

2.14.10 Data Clock Generating Circuit

This circuit generates a data clock synchronized with the start bit detected in the start bit detecting circuit. The data clock stores caption data to the 16-bit shift register. When the 16-bit data has been stored and the clock run-in determination circuit determines clock run-in, the caption data latch completion flag is set. This flag is reset at a falling of the vertical synchronous signal (V_{sep}).

Data clock position register

b7	b6	b5	b4	b3	b2	b1	b0
X	X	X					

Symbol	Address	When reset
DPS	$026A_{16}$	$XXX00001_2$

Bit symbol	Bit name	Function	R	W
DPS0	Data clock position set bits		○	○
DPS1			○	○
DPS2			○	○
DPS3			○	○
DPS4			○	○
Nothing is assigned. If an attempt to write to these bits, write “0.” The read turns out to be “0.”			—	—

Figure 2.14.11 Data clock position register

2.14.11 16-bit Shift Register

The caption data converted into a digital value by the comparator is stored into the 16-bit shift register in synchronization with the data clock. The contents of the stored caption data can be obtained by reading out the caption data register 1 (addresses 0263_{16}, 0262_{16}) and caption data register 2 (addresses 0265_{16}, 0264_{16}). These registers are reset to “0” at a falling of V_{sep}. Read out data registers 1 and 2 after the occurrence of a data slicer interrupt (refer to “2.14.12 Interrupt request generating circuit)”.

2.14.12 Interrupt Request Generating Circuit

The interrupt requests as shown in Table 2.14.3 are generated by combination of the following bits; bits 6 and 7 of the caption position register (address 0266_{16}). Read out the contents of data registers 1, 2 and the contents of bits 3 to 7 of the clock run-in detect register after the occurrence of a data slicer interrupt request.

Table 2.14.2 Contents of caption data latch completion flag and 16-bit shift register

Slice Line Specification Mode		ContentsofCaptionDataLatchCompletionFlag		Contents of 16-bit Shift Register	
CPS		Completion Flag 1 (bit 0 of DSC2)	Completion Flag 2 (bit 5 of CPS)	Caption Data Register 1	Caption Data Register 2
bit 7	bit 6				
0	0	Line 21	A line specified by bits 4 to 0 of CPS	16-bit data of line 21	16-bit data of a line specified by bits 4 to 0 of CPS
0	1	A line specified by bits 4 to 0 of CPS	Invalid	16-bit data of a line specified by bits 4 to 0 of CPS	Invalid
1	0	Line 21	Invalid	16-bit data of line 21	Invalid
1	1	Line 21	A line specified by bits 4 to 0 of CPS	16-bit data of line 21	16-bit data of a line specified by bits 4 to 0 of CPS

CPS: Caption position register
DSC2: Data slicer control register 2

Table 2.14.3 Occurrence sources of Interrupt request

CPS		Occurrence Sources of Interrupt Request at End of Data Slice Line
b7	b6	
0	0	After slicing line 21
	1	After a line specified by bits 4 to 0 of CPS
1	0	After slicing line 21
	1	After slicing line 21

CPS: Caption position register

Data slicer reserved register i (i =1, 2)

b7	b6	b5	b4	b3	b2	b1	b0
0	0	0	0	0	0	0	0

Symbol	Address	When reset
DR1	0268_{16}	00_{16}
DR2	0267_{16}	00_{16}

Bit symbol	Bit name	Description	R	W
Reserved bits		Mest always be set to “0”	○	○

Figure 2.14.12 Data slicer reserved register i (i = 1, 2)

2.15 HSYNC Counter

The synchronous signal counter counts HSYNC from HSYNC count input pins (HC0/P7$_5$, HC1/P7$_7$) as a count source.

The count value in a certain time (T time; 1024 µs, 2048 µs, 4096 µs and 8192 µs) divided system clock f$_{32}$ is stored into the 8-bit latch.

Accordingly, the latch value changes in the cycle of T time. When the count value exceeds "FF$_{16}$," "FF$_{16}$" is stored into the latch.

The latch value can be obtained by reading out the HSYNC counter latch (address 027F$_{16}$). A count source and count update cycle (T time) are selected by bits 0, 3 and 4 of the HSYNC counter register.

Figure 2.15.1 shows the HSYNC counter and Figure 2.15.2 shows the synchronous signal counter block diagram.

Note: When using the HSYNC counter, set bit 7 of the peripheral mode register (address 027D$_{16}$) according to the main clock frequency.

HSYNC counter register

b7 b6 b5 b4 b3 b2 b1 b0

Symbol	Address	When reset
HC	0267$_{16}$	XXX00X00$_{16}$

Bit symbol	Bit name	Function	R	W
HCC0	Count source switch bit	0 : HC0/P7$_5$ pin input 1 : HC1/P7$_7$ pin input	○	○
HCC1	Input polarity switch bit	0 : (Falling edge count) 1 : (Rising edge count)	○	○
Nothing is assigned. In an attempt to write to this bit, write "0." The value, if read, turns out to be "0."			—	—
HCC3	Count freguency selection bits	b4 b3 <Count freguency> 0 0 : 1024 µs 0 1 : 2048 µs 1 0 : 4096 µs 1 1 : 8192 µs	○	○
HCC4			○	○
Nothing is assigned. In an attempt to write to these bits, write "0." The value, if read, turns out to be "0."			—	×

Note: When HC0 and HC1 input are positive polarity (negetive polarity), HIGH width (LOW width) needs 3 main clock cycles or more of system clock.

Figure 2.15.1 HSYNC counter register

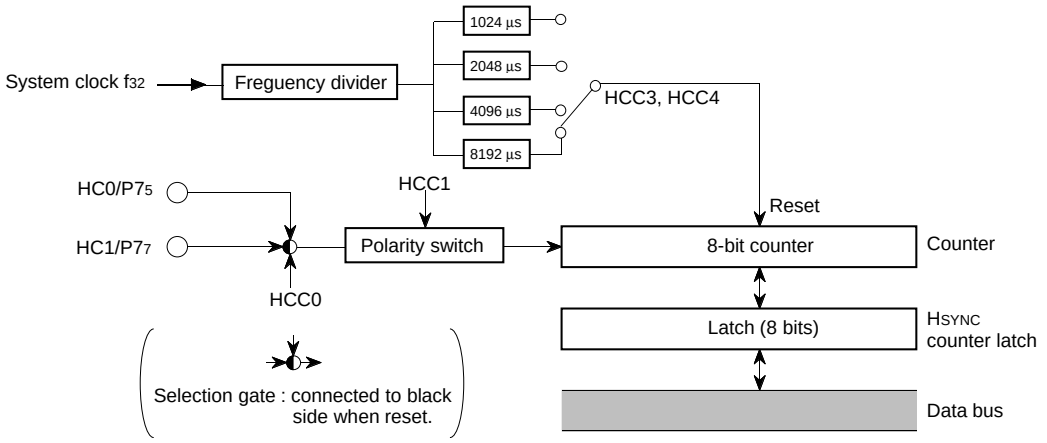

Figure 2.15.2 HSYNC counter block diagram

2.16 OSD Functions

Table 2.16.1 outlines the OSD functions of this microcomputer. This OSD function can display the following: the block display (32 characters × 16 lines or 42 characters × 16 lines) and the SPRITE display, and can display the both display at the same time. There are 3 display modes and they are selected by a block unit. The display modes are selected by block control register i (i = 1 to 16). The features of each display are described below.

Note: When using OSD function, select "No-division mode" as BCLK operating mode and set the main clock frequency to f(XIN) = 10 MHz.

Table 2.16.1 Features of each display style

Parameter \ Display style		Block display					SPRITE display
		CC mode (Closed caption mode)	OSD mode (On-screen display mode)			CDOSD mode (Color dot on-screen display mode)	
			OSDS mode	OSDP mode	OSDL mode		
Number of display characters		32 characters × 16 lines/42 characters × 16 lines					1 character × 2 lines
Dot structure		16 × 20 dots (Character display area: 16 × 26 dots)		16 × 20 dots 12 × 20 dots 8 × 20 dots 4 × 20 dots	24 × 32 dots	16 × 26 dots	32 × 20 dots
Kinds of character ROM	OSDL enable mode	254 kinds			254 kinds	126 kinds	2 kinds of RAM font
	OSDL disable mode	508 kinds	254 kinds		———		
Kinds of character sizes (See note 1)		4 kinds	14 kinds	12 kinds		14 kinds	8 kinds
	Pre-divide ratio (Note)	× 1, × 2	× 1, × 2, × 3				× 1, × 2
	Dot size	1Tc × 1/2H, 1Tc × 1H	1Tc × 1/2H, 1Tc × 1H, 1.5Tc × 1/2H, 1.5Tc × 1H, 2Tc × 2H, 3Tc × 3H	1Tc × 1/2H, 1Tc × 1H, 2Tc × 2H, 3Tc × 3H		1Tc × 1/2H, 1Tc × 1H, 1.5Tc × 1/2H, 1.5Tc × 1H, 2Tc × 2H, 3Tc × 3H	1Tc × 1/2H, 1Tc × 1H, 2Tc × 2H, 3Tc × 3H
Attribute		Smooth italic, under line, flash	Border		———		
Character font coloring		1 screen: 8 kinds (a character unit) Max. 512 kinds	1 screen: 16 kinds (a character unit) Max. 512 kinds			1 screen: 16 kinds (a dot unit) (only specified dots are colored by a character unit) Max. 512 kinds	1 screen: 16 kinds (a dot unit) Max. 512 kinds
Character background coloring		Possible (a character unit, 1 screen: 4 kinds, Max. 512 kinds)	Possible (a character unit,1 screen: 16 kinds, Max. 512 kinds)			———	
Display layer		Layer 1	Layers 1, 2	Layer 1	Layers 1, 2		Layer 3 (with highest priority)
OSD output (See note 2)		Analog R, G, B output (each 8 adjustment levels: 512 colors), Digital OUT1, OUT2 output					
Raster coloring		Possible (a screen unit, max 512 kinds)					
Other function (See note 3)		Auto solid space function	Triple layer OSD function, window function, blank function				
Display expansion (multiline display)		Possible					

Notes 1: The character size is specified with dot size and pre-divide ratio (refer to "2.16.3 Dot Size").
2: As for SPRITE display, OUT2 is not output.
3: As for SPRITE display, the window function does not operate.
4: The divide ratio of the frequency divider (the pre-divide circuit) is referred as "pre-divide ratio" hereafter.

The OSD circuit has an extended display mode. This mode allows multiple lines (16 lines or more) to be displayed on the screen by interrupting the display each time one line is displayed and rewriting data in the block for which display is terminated by software.
Figure 2.16.1 shows the display-enable fonts for each display style. Figure 2.16.2 shows the block diagram of the OSD circuit. Figure 2.16.3 shows the OSD control register 1. Figure 2.16.4 shows the block control register i.

Display Styles	Display-enable Fonts
CC Mode	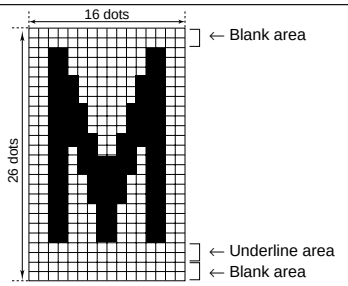
OSDS Mode	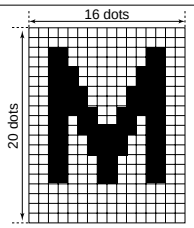
OSDP Mode	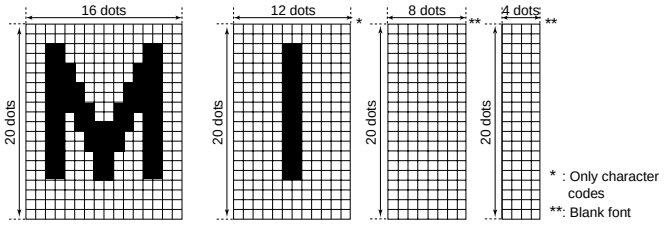
OSDL Mode	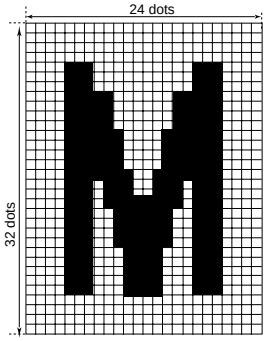
CDOSD Mode	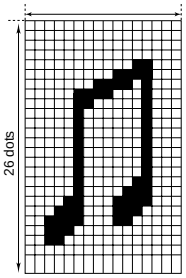
SPRITE	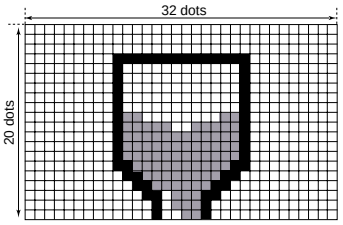

Figure 2.16.1 Display-enable fonts for each display style

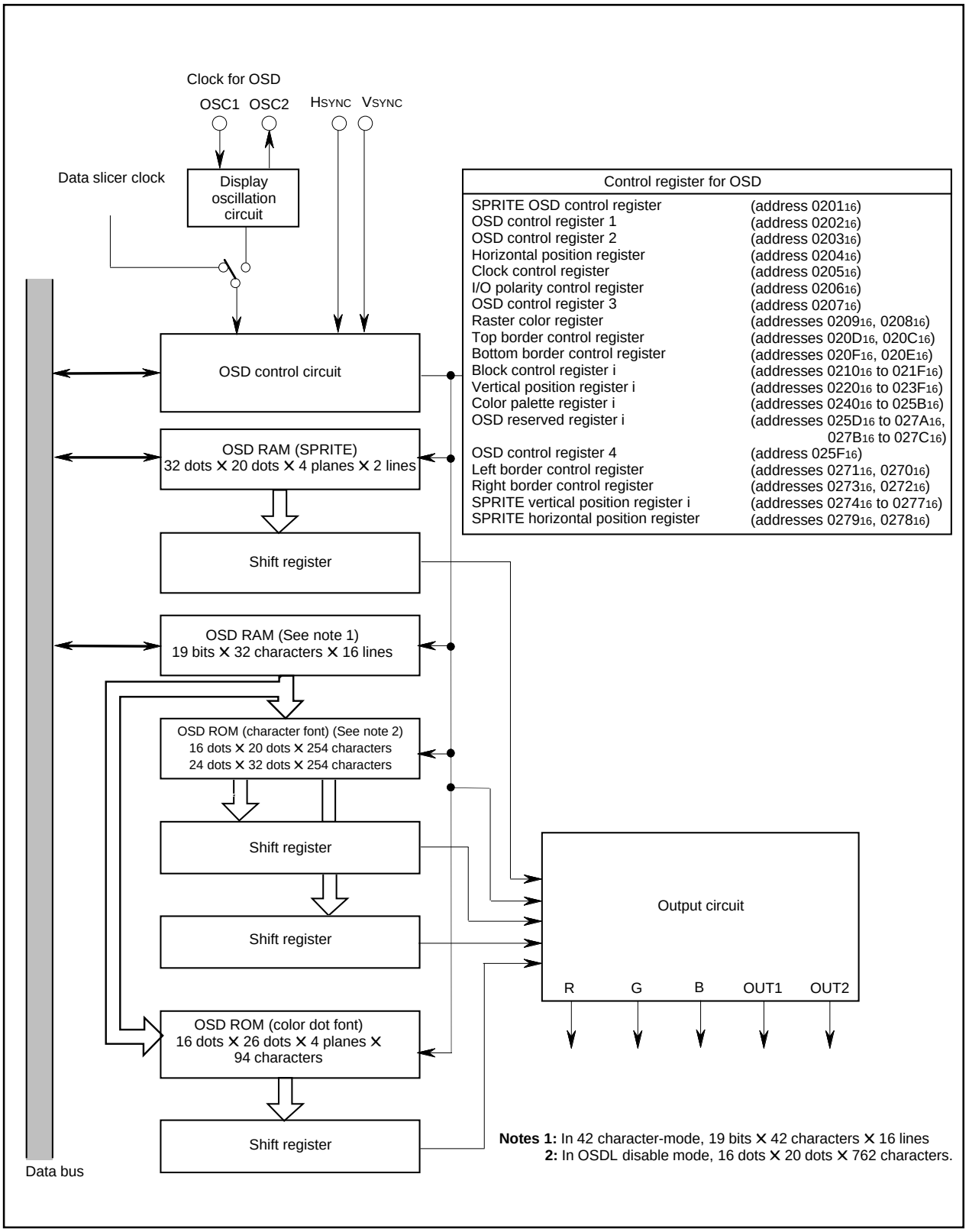

Control register for OSD	
SPRITE OSD control register	(address 0201_{16})
OSD control register 1	(address 0202_{16})
OSD control register 2	(address 0203_{16})
Horizontal position register	(address 0204_{16})
Clock control register	(address 0205_{16})
I/O polarity control register	(address 0206_{16})
OSD control register 3	(address 0207_{16})
Raster color register	(addresses 0209_{16}, 0208_{16})
Top border control register	(addresses $020D_{16}$, $020C_{16}$)
Bottom border control register	(addresses $020F_{16}$, $020E_{16}$)
Block control register i	(addresses 0210_{16} to $021F_{16}$)
Vertical position register i	(addresses 0220_{16} to $023F_{16}$)
Color palette register i	(addresses 0240_{16} to $025B_{16}$)
OSD reserved register i	(addresses $025D_{16}$ to $027A_{16}$, $027B_{16}$ to $027C_{16}$)
OSD control register 4	(address $025F_{16}$)
Left border control register	(addresses 0271_{16}, 0270_{16})
Right border control register	(addresses 0273_{16}, 0272_{16})
SPRITE vertical position register i	(addresses 0274_{16} to 0277_{16})
SPRITE horizontal position register	(addresses 0279_{16}, 0278_{16})

Figure 2.16.2 Block diagram of OSD circuit

OSD control register 1

b7	b6	b5	b4	b3	b2	b1	b0

Symbol	Address	When reset
OC1	0202_{16}	00_{16}

Bit symbol	Bit name	Function	R	W
OC10	OSD control bit (See note 1)	0 : All-blocks and SPRITE display OFF 1 : All-blocks and SPRITE display ON	○	○
OC11	Scan mode selection bit	0 : Normal scan mode 1 : Bi-scan mode	○	○
OC12	Border type selection bit	0 : All bordered 1 : Shadow bordered (See note 2)	○	○
OC13	Flash mode selection bit	0 : Color signal of character background part does not flash 1 : Color signal of character background part flashes	○	○
OC14	Automatic solid space control bit	0 : OFF 1 : ON	○	○
OC15	Vertical window/blank control bit	0 : OFF 1 : ON	○	○
OC16	Layer mixing control bits (See note 3)	b7 b6 0 0: Logic sum (OR) of layer 1's color and layer 2's color 0 1: Layer 1's color has priority 1 0: Layer 2's color has priority 1 1: Do not set.	○	○
OC17			○	○

Notes 1 : Even this bit is switched during display, the display screen remains unchanged until a rising (falling) of the next VSYNC.
2 : Shadow border is output at right and bottom side of the font.
3 : OUT2 is always ORed, regardless of values of these bits.

Figure 2.16.3 OSD control register 1

Block control register i

b7	b6	b5	b4	b3	b2	b1	b0
X							

Symbol
BCi (i = 1 to 16)

When reset
Indeterminate

Bit symbol	Bit name	Function	R	W
BCi_0	Display mode selection bits		○	○
BCi_1			○	○
BCi_2			○	○
BCi_3	Dot size selection bits		○	○
BCi_4			○	○
BCi_5	Pre-divide ratio selection bits		○	○
BCi_6			○	○
Nothing is assigned. In an attempt to write to this bit, write “0.” The value, if read, turns out to be indeterminate.			—	—

Bit symbol function (b0, b1, b0):

b0	b1	b0	Functions
0	0	0	Display OFF
0	0	1	OSDS mode (No bordered)
0	1	0	CC mode
0	1	1	CDOSD mode
1	0	0	OSDP mode (No bordered)
1	0	1	OSDS mode (Bordered)
1	1	0	OSDP mode (Bordered)
1	1	1	OSDL mode

Bit symbol function (b6, b5, b4, b3):

b6	b5	b4	b3	Pre-divide ratio	Dot size
0	0	0	0	× 1	1Tc × 1/2H
		0	1		1Tc × 1H
		1	0		2Tc × 2H
		1	1		3Tc × 3H
0	1	0	0	× 2	1Tc × 1/2H
		0	1		1Tc × 1H
		1	0		2Tc × 2H
		1	1		3Tc × 3H
1	1	0	0		1.5Tc × 1/2H (See notes 3, 4)
		0	1		1.5Tc × 1H (See notes 3, 4)
1	1	0	0	× 3	1Tc × 1/2H
		0	1		1Tc × 1H
		1	0		2Tc × 2H
		1	1		3Tc × 3H

Notes 1: Tc is OSD clock cycle divided in pre-divide circuit
2: H is HSYNC
3: This character size is available only in Layer 2. At this time, set layer 1’s pre-divide ratio = × 2, layer 1’s horizontal dot size = 1Tc.
4: In OSDL and OSDP modes, 1.5Tc size cannot be used.

Figure 2.16.4 Block control register i (i = 0 to 16)

2.16.1 Triple Layer OSD

Three built-in layers of display screens accommodate triple display of channels, volume, etc., closed caption, and sprite displays within layers 1 to 3.

The layer to be displayed in each block is selected by bit 0 or 1 of the OSD control register 2 for each display mode (refer to Figure 2.16.7). Layer 3 always displays the sprite display.

When the layer 1 block and the layer 2 block overlay, the screen is composed with layer mixing by bit 6 or 7 of the OSD control register 1, as shown in Figure 2.16.5. Layer 3 always takes display priority of layers 1 and 2.

Notes 1: When mixing layer 1 and layer 2, note Table 2.16.2.

2: OSDP mode is always displayed on layer 1. And also, it cannot be overlapped with layer 2's block.

3: OUT2 is always ORed, regardless of values of bits 6, 7 of the OSD control register 1. And besides, even when OUT2 (layer 1 and layer 2) overlaps with SPRITE display (layer 3), OUT2 is output without masking.

Table 2.16.2 Mixing layer 1 and layer 2

Parameter \ Block	Block in Layer 1	Block in Layer 2	
Display mode	CC, OSDS/L, CDOSD mode	OSDS/L, CDOSD mode	
Pre-divide ratio	✕ 1, ✕ 2 (CC mode) ✕ 1 to ✕ 3 (OSD, CDOSD mode)	Same as layer 1 (See note)	
Dot size	1Tc ✕ 1/2H, 1Tc ✕ 1H (CC mode)	Pre-divide ratio = ✕ 1	Pre-divide ratio = ✕ 2
		1Tc ✕ 1/2H 1Tc ✕ 1H	1Tc✕1/2H, 1.5Tc✕1/2H 1Tc✕1H, 1.5Tc✕1H (See note)
	1Tc ✕ 1H, 1Tc ✕ 1/2H, 2Tc ✕ 2H, 3Tc ✕ 3H (OSDS/L, CDOSD mode)	• Same size as layer 1 •1.5Tc can be selected only when: layer 1's pre-divide ratio = ✕ 2 AND layer 1's horizontal dot size = 1Tc. As this time, vertical dot size is the same as layer 1.	
Horizontal display start position	Arbitrary	Same position as layer 1	
Vertical display start position	Arbitrary However, when dot size is 2Tc ✕ 2H or 2Tc ✕ 3H, set difference between vertical display position of layer 1 and that of layer 2 as follows. •2Tc ✕ 2H: 2H units •3Tc ✕ 3H: 3H units		

Note: In the OSDL mode, 1.5Tc size cannot be used.

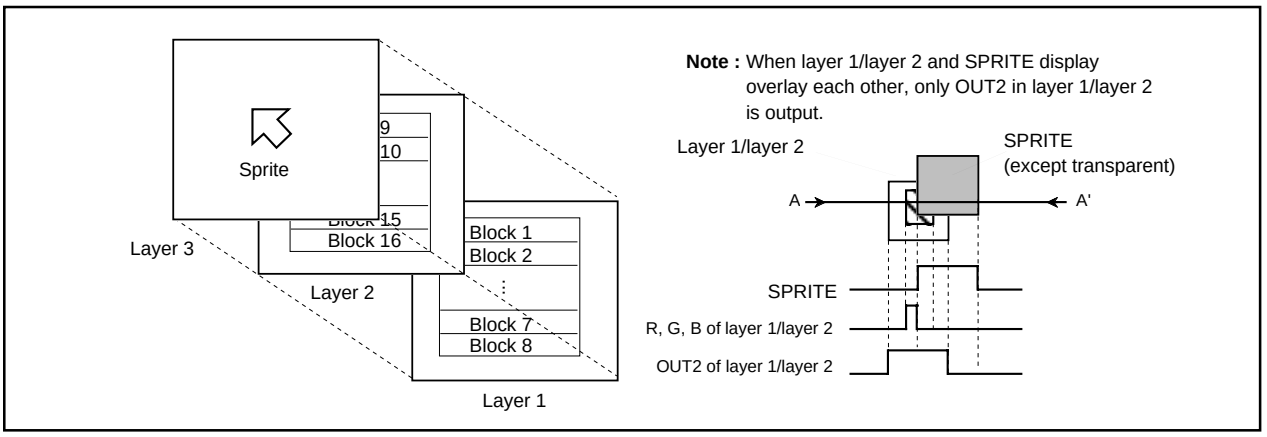

Fig 2.16.5 Triple layer OSD

Display example of layer 1 = “HELLO,” layer 2 = “CH5”

Logical sum (OR) of layer 1’s color and layer 2’s color (See note) OC17 = “0,” OC16 = “0”

Layer 1’s color has priority OC17 = “0”, OC16 = “1”

Layer 2’s color has priority OC17 = “1,” OC16 = “0”

Note: The logical sum (OR) of layer mixing is not OR of the color palette registers’ contents (color), but that of color pallet registers’ numbers (i).

Example) When the logical sum (OR) is performed on the color palettes 1 and 4; the number 1 (0001_2) and number 4 (0100_2) are ORed and it results in the number 5 (0101_2). That is, the contents (color) of color palette register 5 is output. The color of color palette register 5 is output in the ORed part, regardless of colors of color palettes registers 1 and 4.

Figure 2.16.6 Display example of triple layer OSD

OSD control register 2

b7	b6	b5	b4	b3	b2	b1	b0

Symbol	Address	When reset
OC2	0203_{16}	00_{16}

Bit symbol	Bit name	Function				R	W
OC20	Display layer selection bits	b1	b0	Layer 1	Layer 2	○	○
		0	0	CC, OSDS/L/P, CDOSD	—		
		0	1	CC, OSDS/L/P	CDOSD		
OC21		1	0	CC, OSDP, CDOSD	OSDS/L	○	○
		1	1	CC, OSDP	CDOSD OSDS/L		
OC22	R, G, B signal output selection bit	0: Digital output 1: Analog output (8 gradations)				○	○
OC23	Solid space output bit	0: OUT1 output 1: OUT2 output				○	○
OC24	Horizontal window/blank control bit	0: OFF 1: ON				○	○
OC25	Window/blank selection bit 1 (horizontal)	0: Horizontal blank function 1: Horizontal window function				○	○
OC26	Window/blank selection bit 2 (vertical)	0: Vertical blank function 1: Vertical window function				○	○
OC27	OSD interrupt request selection bit	0: At completion of layer 1 block display 1: At completion of layer 2 block display				○	○

Figure 2.16.7 OSD control register 2

2.16.2 Display Position

The display positions of characters are specified by a block. There are 16 blocks, blocks 1 to 16. Up to 32 characters (32-character mode)/42 characters (42-character mode)/ can be displayed in each block (refer to 2.16.6 Memory for OSD).

The display position of each block can be set in both horizontal and vertical directions by software.

The display position in the horizontal direction can be selected for all blocks in common from 256-step display positions in units of 4 T_{OSC} (T_{OSC} = OSD oscillation cycle).

The display position in the vertical direction for each block can be selected from 1024-step display positions in units of 1 T_H (T_H = H_{SYNC} cycle).

Blocks are displayed in conformance with the following rules:

- When the display position is overlapped with another block in the same layer (Figure 2.16.8 (b)), a low block number (1 to 16) is displayed on the front.
- When another block display position appears while one block is displayed in the same layer (Figure 2.16.8 (c)), the block with a larger set value as the vertical display start position is displayed. However, do not display block with the dot size of 2T_C × 2H or 3T_C × 3H during display period (✻) of another block.
  - ✻ In the case of OSDS/P mode block: 20 dots in vertical from the vertical display start position.
  - ✻ In the case of OSDL mode block: 32 dots in vertical from the vertical display start position.
  - ✻ In the case of CC or CDOSD mode block: 26 dots in vertical from the vertical display start position.

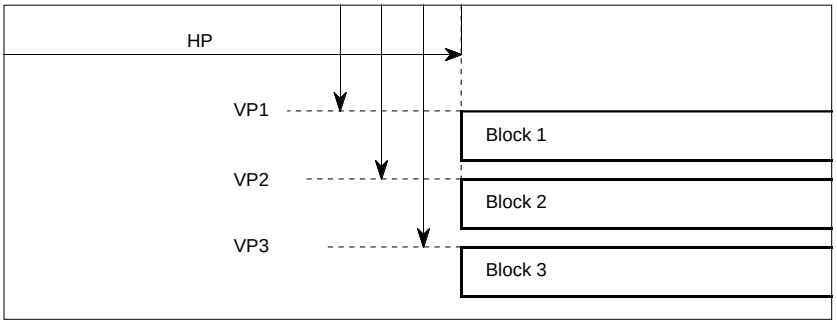

(a) Example when each block is separated

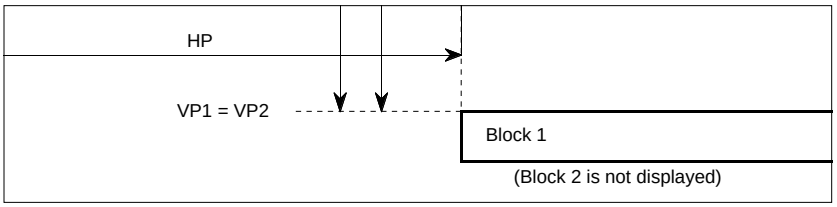

(b) Example when block 2 overlaps with block 1

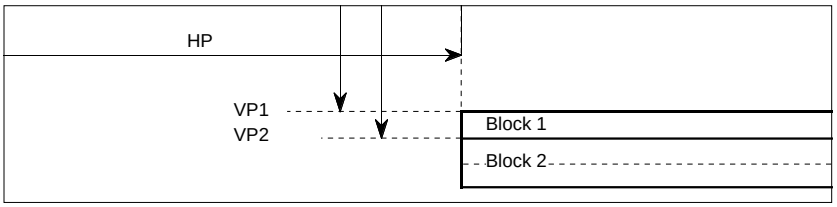

(c) Example when block 2 overlaps in process of block 1

Note: VPi (i = 1 to 16) indicates the vertical display start position of display block i.

Figure 2.16.8 Display position

The display position in the vertical direction is determined by counting the horizontal sync signal (HSYNC). At this time, when VSYNC and HSYNC are positive polarity (negative polarity), it starts to count the rising edge (falling edge) of HSYNC signal from after fixed cycle of rising edge (falling edge) of VSYNC signal. So interval from rising edge (falling edge) of VSYNC signal to rising edge (falling edge) of HSYNC signal needs enough time (2 × BCLK cycles or more) for avoiding jitter. The polarity of HSYNC and VSYNC signals can select with the I/O polarity control register (address 0206_{16}).

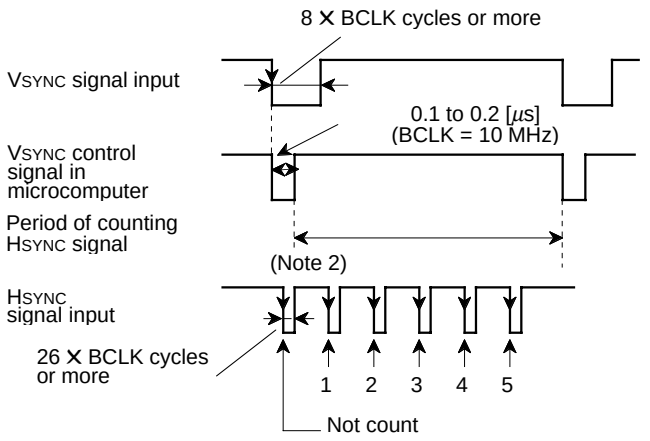

When bits 0 and 1 of the I/O polarity control register (address 0206_{16}) are set to "1" (negative polarity)

Notes 1 : The vertical position is determined by counting falling edge of HSYNC signal after rising edge of VSYNC control signal in the microcomputer.
2 : Do not generate falling edge of HSYNC signal near rising edge of VSYNC control signal in microcomputer to avoid jitter.
3 : The pulse width of HSYNC needs 26 × BCLK cycles or more (BCLK = 10 MHz).

Figure 2.16.9 Supplement explanation for display position

The vertical position for each block can be set in 1024 steps (where each step is 1TH (TH: HSYNC cycle)) as values “002$_{16}$” to “3FF$_{16}$” in vertical position register i (i = 1 to 16) (addresses 0220$_{16}$ to 023F$_{16}$). The vertical position register i is shown in Figure 2.16.10.

Vertical position register i

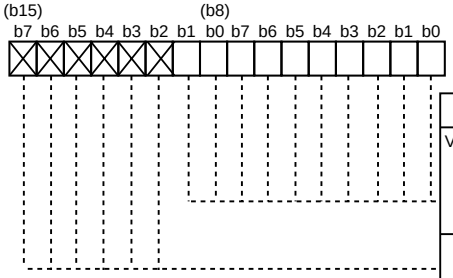

Symbol	Address	When reset
VPi (i = 1 to 16)	Even addresses within addresses 0220$_{16}$ to 023F$_{16}$, Odd addresses within addresses 0220$_{16}$ to 023F$_{16}$	Indeterminate

Bit symbol	Bit name	Function	R	W
VPi_9 to VPi_0	Vertical display start position control bits of SPRITE font	Vertical display start position = TH × n (n: setting value, TH: HSYNC cycle)	○	○
Nothing is assined. In an attempt to write to this bit, write “0.” The value, if read, turns out to be indeterminate.			—	—

Note : Do not set VPi ≤ “001$_{16}$,” VPi ≥ “400$_{16}$.”

Figure 2.16.10 Vertical position register i (i = 1 to 16)

The horizontal position is common to all blocks, and can be set in 256 steps (where 1 step is 4TOSC, TOSC being OSD oscillation cycle) as values “00$_{16}$” to “FF$_{16}$” in bits 0 to 7 of the horizontal position register (address 0204$_{16}$). The horizontal position register is shown in Figure 2.16.11.

Horizontal position register

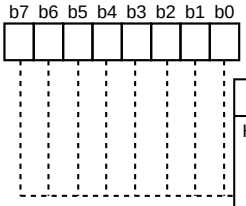

Symbol	Address	When reset
HP	0204$_{16}$	00$_{16}$

Bit symbol	Bit name	Function	R	W
HP_7 to HP_0	Horizontal display start position control bits	Horizontal display start position = 4TOSC × n (n: setting value, TOSC: OSD oscillation cycle)	○	○

Note : The setting value synchronizes with the VSYNC.

Figure 2.16.11 Horizontal position register

Note : 1Tc (Tc : OSD clock cycle divided in pre-divide circuit) gap occurs between the horizontal display start position set by the horizontal position register and the most left dot of the 1st block. Accordingly, when 2 blocks have different pre-divide ratios, their horizontal display start position will not match.
Ordinary, this gap is 1Tc regardless of character sizes, however, the gap is 1.5Tc only when the character size is 1.5Tc.

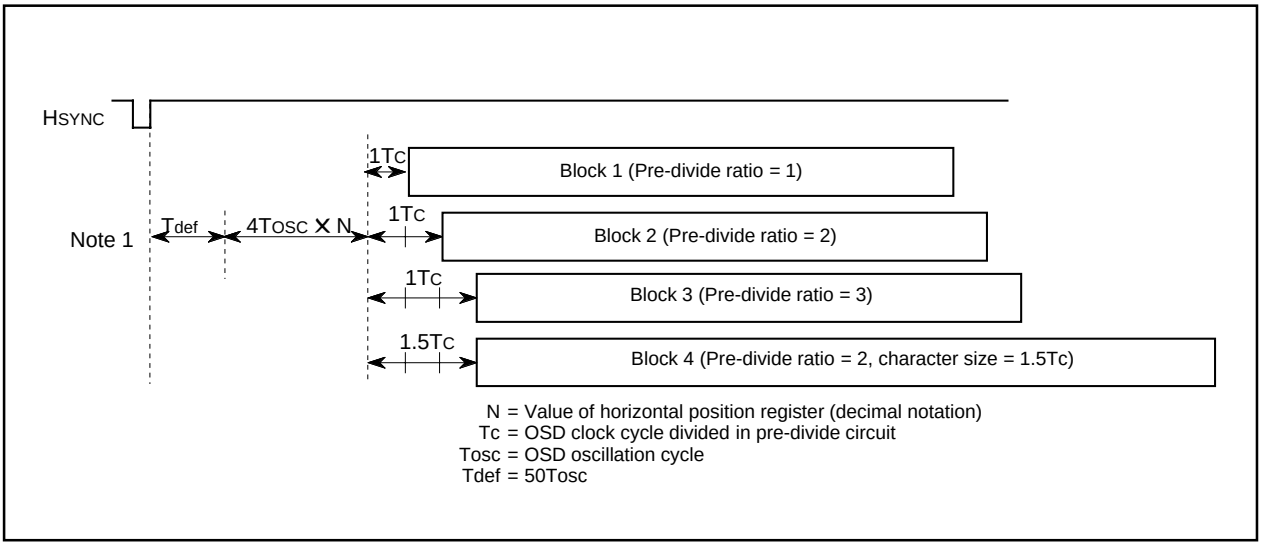

Figure 2.16.12 Notes on horizontal display start position

2.16.3 Dot Size

The dot size can be selected by a block unit. The dot size in vertical direction is determined by dividing HSYNC in the vertical dot size control circuit. The dot size in horizontal is determined by dividing the following clock in the horizontal dot size control circuit : the clock gained by dividing the OSD clock source (data slicer clock, OSC1, main clock) in the pre-divide circuit. The clock cycle divided in the pre-divide circuit is defined as 1TC.

The dot size is specified by bits 3 to 6 of the block control register.

Refer to Figure 2.16.4 (the block control register i), refer to Figure 2.16.15 (the clock control register).

The block diagram of dot size control circuit is shown in Figure 2.16.13.

Notes 1 : The pre-divide ratio = 3 cannot be used in the CC mode.

2 : The pre-divide ratio of the layer 2 must be same as that of the layer 1 by the block control register i.

3 : In the bi-scan mode, the dot size in the vertical direction is 2 times as compared with the normal mode. Refer to “2.16.18 Scan Mode” about the scan mode.

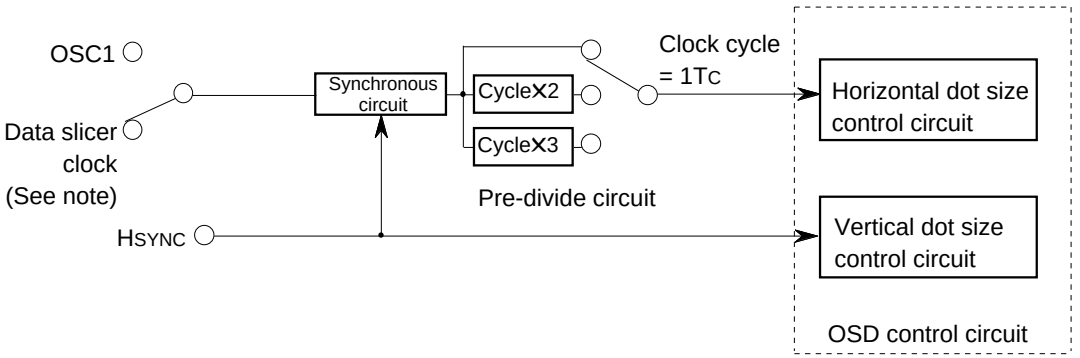

Note: To use data slicer clock, set bit 0 of data slicer control register 1 to “0.”

Figure 2.16.13 Block diagram of dot size control circuit

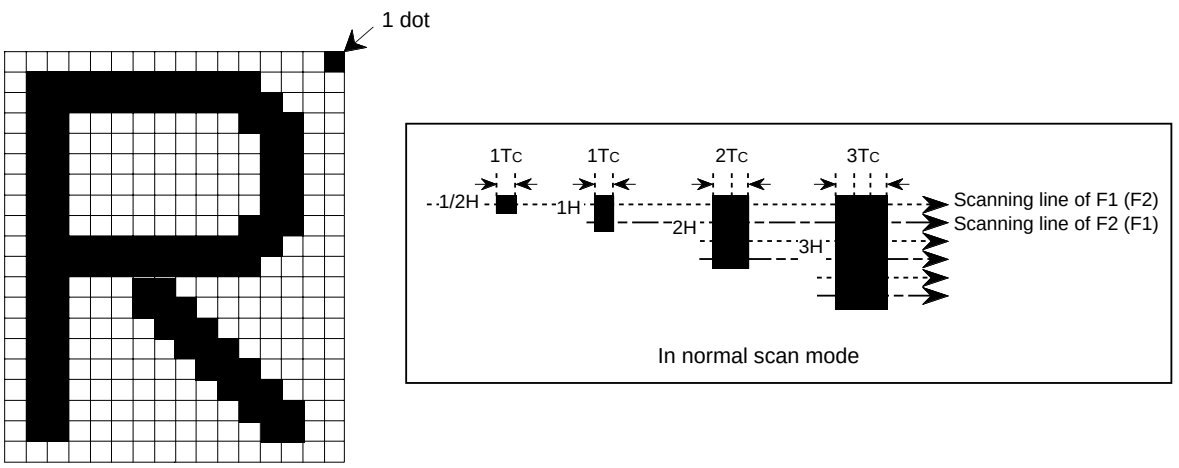

Figure 2.16.14 Definition of dot sizes

2.16.4 Clock for OSD

As a clock for display to be used for OSD, it is possible to select one of the following 3 types.

- Data slicer clock output from the data slicer (approximately 26 MHz)
- Clock from the LC oscillator supplied from the pins OSC1 and OSC2
- Clock from the ceramic resonator (or the quartz-crystal oscillator) from the pins OSC1 and OSC2

Clock control register

b7	b6	b5	b4	b3	b2	b1	b0
0	0	0		0			

Symbol	Address	When reset
CS	0205_{16}	00_{16}

Bit symbol	Bit name	Function	R	W
CS0	Clock selection bit	0: Data slicer clock 1: OSC1 clock	○	○
CS1	OSC1 oscillating mode selection bits	b2 b1 0 0: Stopped 0 1: Do not set. 1 0: LC oscillating mode 1 1: Ceramic • quartz-crystal oscillating mode	○	○
CS2			○	○
Reserved bit		Must always be set to “0”	○	○
CS4	R', G', B' signal output control bit	0: R', G', B' output invalid 1: R', G', B' output valid	○	○
Reserved bits		Must always be set to “0”	○	○

Figure 2.16.15 Clock control register

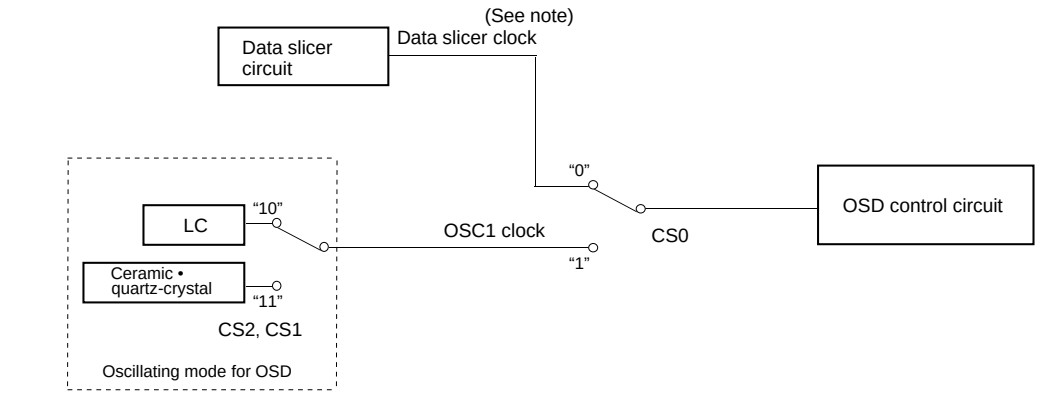

Note : To use data slicer clock, set bit 0 of data slicer control register 1 to “1.”

Figure 2.16.16 Block Diagram of OSD selection circuit

2.16.5 Field Determination Display

To display the block with vertical dot size of 1/2H, whether an even field or an odd field is determined through differences in a synchronizing signal waveform of interlacing system. The dot line 0 or 1 (refer to Figure 2.16.18) corresponding to the field is displayed alternately.

In the following, the field determination standard for the case where both the horizontal sync signal and the vertical sync signal are negative-polarity inputs will be explained. A field determination is determined by detecting the time from a falling edge of the horizontal sync signal until a falling edge of the VSYNC control signal (refer to Figure 2.16.9) in the microcomputer and then comparing this time with the time of the previous field. When the time is longer than the comparing time, it is regarded as even field. When the time is shorter, it is regarded as odd field.

The field determination flag changes at a rising edge of VSYNC control signal in the microcomputer .

The contents of this field can be read out by the field determination flag (bit 7 of the I/O polarity control register at address 0206_{16}). A dot line is specified by bit 6 of the I/O polarity control register (refer to Figure 2.16.18).

However, the field determination flag read out from the CPU is fixed to “0” at even field or “1” at odd field, regardless of bit 6.

I/O polarity control register

b7	b6	b5	b4	b3	b2	b1	b0
				0			

Symbol	Address	When reset
PC	0206_{16}	$1000X000_2$

Bit symbol	Bit name	Function	R	W
PC0	HSYNC input polarity switch bit	0 : Positive polarity input 1 : Negative polarity input	○	○
PC1	VSYNC input polarity switch bit	0 : Positive polarity input 1 : Negative polarity input	○	○
PC2	R, G, B output polarity switch bit	0 : Positive polarity output 1 : Negative polarity output	○	○
Reserved bit		Must always be set to “0.”	○	○
PC4	OUT1 output polarity switch bit	0 : Positive polarity output 1 : Negative polarity output	○	○
PC5	OUT2 output polarity switch bit	0 : Positive polarity output 1 : Negative polarity output	○	○
PC6	Display dot line selection bit (See note)	0 : “□” at even field “▨” at odd field 1 : “▨” at even field “□” at odd field	○	○
PC7	Field determination flag	0 : Even field 1 : Odd field	○	×

Note: Refer to Figure 2.16.19.

Figure 2.16.17 I/O polarity control register

Both HSYNC signal and VSYNC signal are negative-polarity input

HSYNC		Field	Field determination flag(Note)	Display dot line selection bit	Display dot line
VSYNC and VSYNC control signal in microcomputer Upper : VSYNC signal Lower : VSYNC control signal in micro-computer	(n - 1) field (Odd-numbered) T1 0.5 to 0.1 [ms] at f(BCLK) = 10 MHz	Odd			
	(n) field (Even-numbered) T2	Even	0 (T2 > T1)	0	Dot line 1
				1	Dot line 0
	(n + 1) field (Odd-numbered) T3	Odd	1 (T3 < T2)	0	Dot line 0
				1	Dot line 1

When using the field determination flag, set bit 7 of the peripheral mode register (address 027D16) according to the main clock frequency.

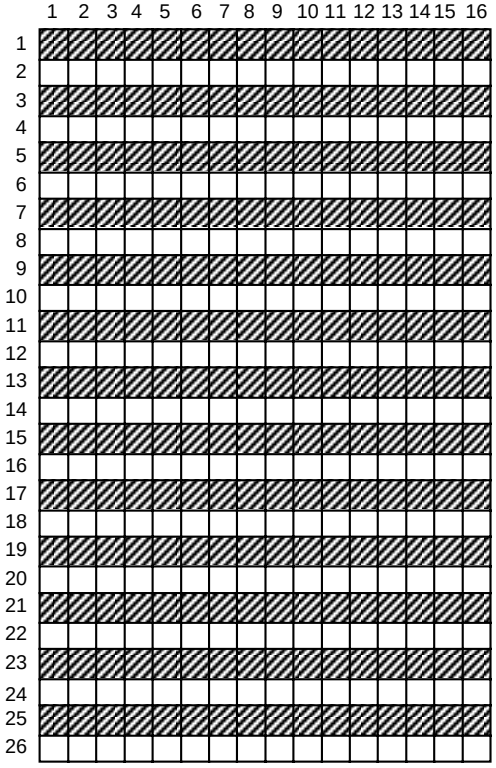

CC mode · CDOSD mode

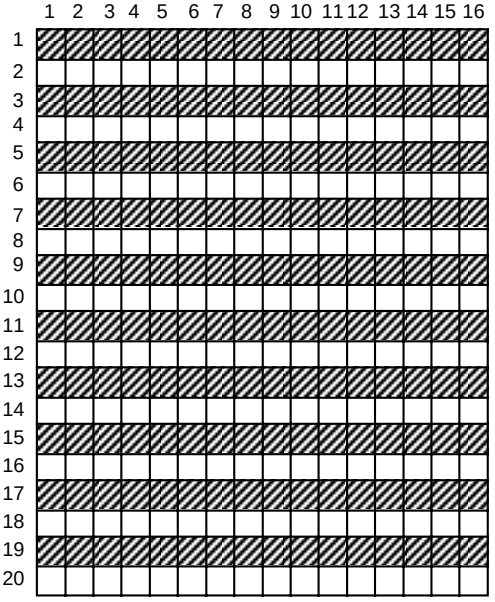

OSDS mode

When the display dot line selection bit is “0,” the “□” font is displayed at even field, the “▨” font is displayed at odd field. Bit 7 of the I/O polarity control register can be read as the field determination flag : “1” is read at odd field, “0” is read at even field.

OSD ROM font configuration diagram

Note : The field determination flag changes at a rising edge of the VSYNC control signal (negative-polarity input) in the microcomputer.

Figure 2.16.18 Relation between field determination flag and display font

2.16.6 Memory for OSD

There are 2 types of memory for OSD : OSD ROM (addresses 90000_{16} to $AFFFF_{16}$) used to store character dot data and OSD RAM (addresses 0400_{16} to $13FF_{16}$) used to specify the kinds of display characters, display colors, and SPRITE display. The following describes each type of memory.

(1) ROM for OSD (addresses 90000_{16} to $AFFFF_{16}$)

The dot pattern data for OSD characters is stored in the character font area in the OSD ROM and the CD font data for OSD characters is stored in the color dot font area in the OSD ROM. To specify the kinds of the character font and the CD font, it is necessary to write the character code into the OSD RAM.

For character font, there are the following 2 mode.

- OSDL enable mode
  16 × 20-dot font and 24 × 32-dot font
- OSDL disable mode
  16 × 20-dot font

The modes are selected by bit 3 of the OSD control register 3 for each screen.

The character font data storing address for OSDL enable/OSDL disable mode are shown in Figures 2.16.20 and 2.16.21. The conditions for each OSDL enable/disable mode are shown in Figure 2.16.22. The CD font data storing address is shown in Figure 2.16.23.

OSD control register 4

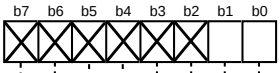

Symbol	Address	When reset
OC4	$025F_{16}$	$XXXXX00_2$

Bit symbol	Bit name	Function	R	W
OC40	OSDL mode selection bit	0 : OSDL enable mode 1 : OSDL disable mode	○	○
OC41	Number of horizontal display characters selection bit	0 : 32 characters for each block (32-character mode) 1 : 42 characters for each block (42-character mode)	○	○
Nothing is assigned. In an attempt to write to these bits, write “0.” The value, if read, turns out to be “0.”			—	—

Figure 2.16.19 OSD control register 4

OSD ROM address of character font data (OSDL enable mode)

Kinds of font \ OSD ROM address bit		AD16	AD15	AD14	AD13	AD12	AD11	AD10	AD9	AD8	AD7	AD6	AD5	AD4	AD3	AD2	AD1	AD0
		Structure of address pointer																
Font (1) Character codes 000_{16} to $0FF_{16}$		0	Line number (1) (MSB to LSB)					Character code (C8)=0	Character code (C7 to C0)								0	Area bit
Font (2) Character codes 100_{16} to $1FF_{16}$	Areas 0, 1	0	Line number (2) (MSB to LSB)					Character code (C8)=1	Character code (C7 to C0)								0	Area bit
	Area 2	1	Line number (2) (MSB to LSB)					0	0	Character code (C6 to C0)							0	Character code (C7)

Line number (1) = "02_{16}" to "15_{16}"
Line number (2) = "00_{16}" to "$1F_{16}$"
Character code = "000_{16}" to "$1FF_{16}$" ("$0FE_{16}$," "$0FF_{16}$," "100_{16}" and "180_{16}" cannot be used. Write "FF_{16}" to corresponding addresses.)
Area bit = 0: Area 0
1: Area 1

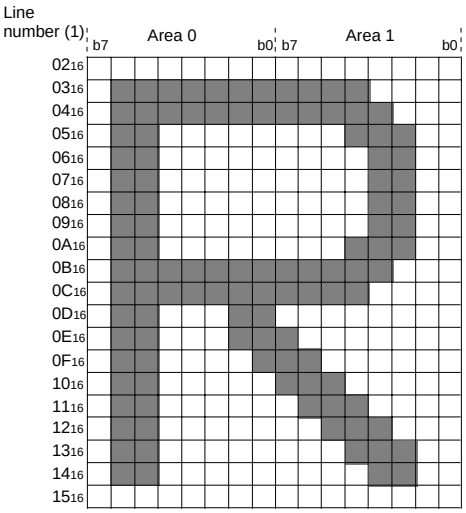

Font (1)
(Character codes 000_{16} to $0FF_{16}$)

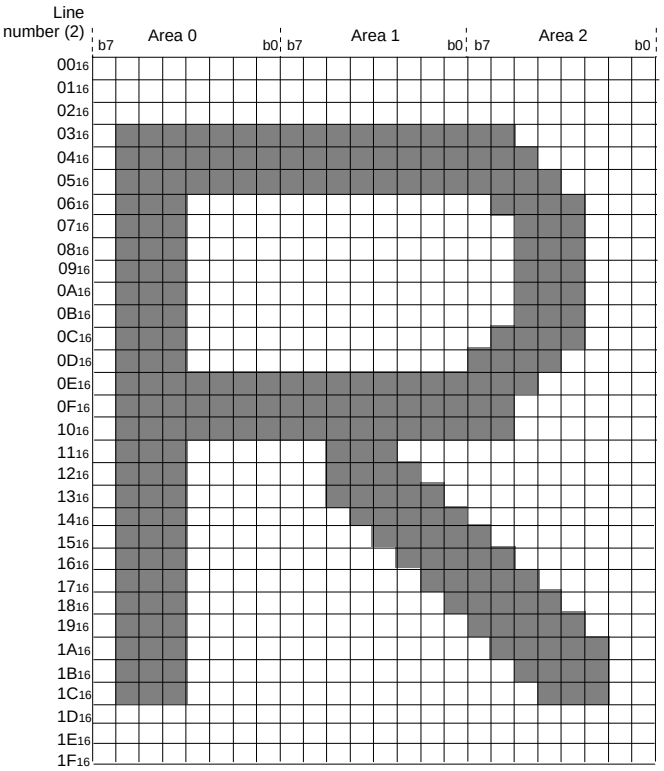

Font (2)
(Character codes 100_{16} to $1FF_{16}$)

Figure 2.16.20 Character font data storing address (OSDL enable mode)

OSD ROM address of character font data (OSDL disable mode)

OSD ROM address bit / Kinds of font	AD16	AD15	AD14	AD13	AD12	AD11	AD10	AD9	AD8	AD7	AD6	AD5	AD4	AD3	AD2	AD1	AD0
	Structure of address pointer																
Font (1) Character codes 000_{16} to $1FF_{16}$	Character code (C9)=0	Line number (1) (MSB to LSB)					Character code (C8 to C0)									0	Area bit
Font (2) Character codes 200_{16} to $27F_{16}$	Character code (C9)=1	Line number (1) (MSB to LSB)					Character code (C8 to C0)									0	Area bit
Font (3) Character codes 280_{16} to $2FF_{16}$	0	1	Line number (3) (NL3 to NL0)				1	Line number (3) (NL4)	Character code (C6 to C0)							0	Area bit

Line number (1) = "02_{16}" to "15_{16}"
Line number (3) = "06_{16}" to "$0F_{16}$" and "16_{16}" to "$1F_{16}$"
Character code = "000_{16}" to "$2FF_{16}$" ("$0FE_{16}$," "$0FF_{16}$," "100_{16}," "180_{16}," "200_{16}" and "280_{16}" cannot be used. Write "FF_{16}" to corresponding addresses.)
Area bit = 0: Area 0
1: Area 1

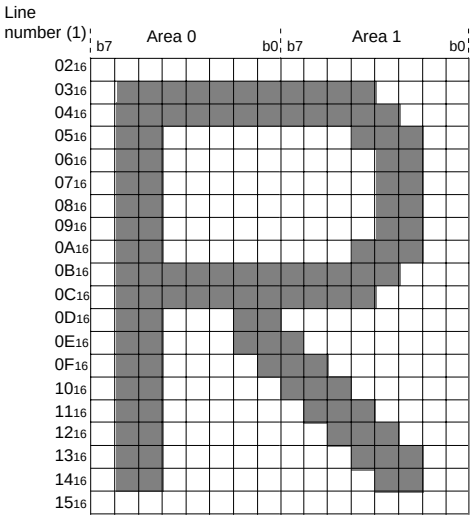

Font (1)
Font (2)
(Character codes 000_{16} to $27F_{16}$)

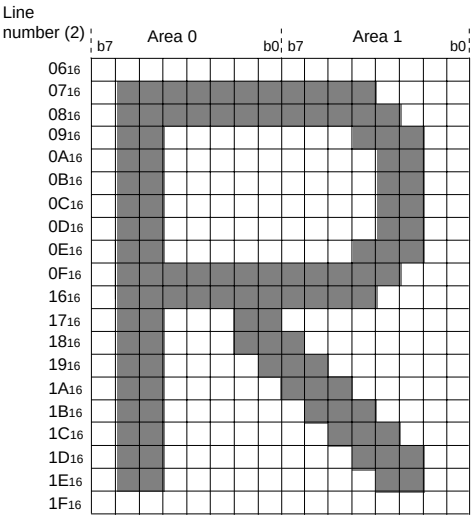

Font (3)
(Character codes 280_{16} to $2FF_{16}$)

Figure 2.16.21 Character font data storing address (OSDL disable mode)

Depending on the relationship of OSDL enable/disable mode, display mode and character code, note the conditions below.

OSDL enable/disable mode / Display mode & character code		Character size	OSDL enable mode (Bit 0 of OSD control register 4 = "0")			Character size	OSDL disable mode (Bit 0 of OSD control register 4 = "1")		
Display mode			CC	OSDS/P	OSDL		CC	OSDS/P	OSDL
Specified character code	000_{16} to $0FF_{16}$	S	Used	Used	Not used (See note 3)	S	Used	Used	Display OFF
	100_{16} to $1FF_{16}$	L	Used (See note 1)	Used (See note 1)	Used		Used	Used	Display OFF
	200_{16} to $27F_{16}$	Not used (See note 3)					Not used (See note 3)	Used	Display OFF
	280_{16} to $2FF_{16}$							Used (No border) (See note 2)	Display OFF
	300_{16} to $3FF_{16}$							Not used	Display OFF

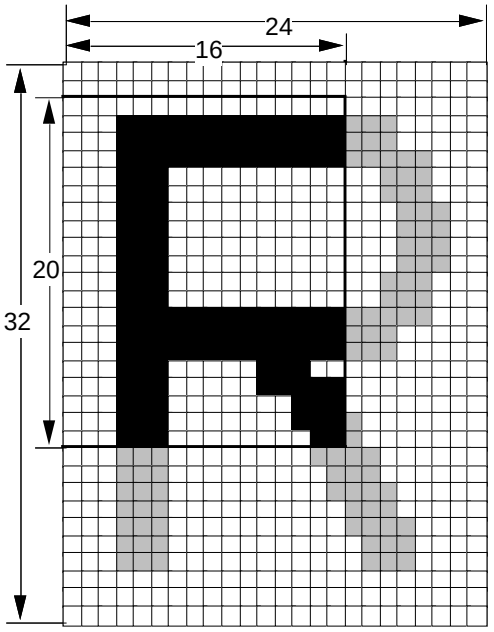

Notes 1: Part of 24 X 32 font is displayed.
2: In OSDL disable mode, character codes "280_{16}" to "$2FF_{16}$" are used in OSDS/P mode (no border).
3: As setting this make output of font data indeterminate, do not use. However, "$3FE_{16}$" and "$3FF_{16}$" can be used as character codes of blank font output in OSDP mode.

Figure 2.16.22 Conditions for each OSDL enable/disable mode

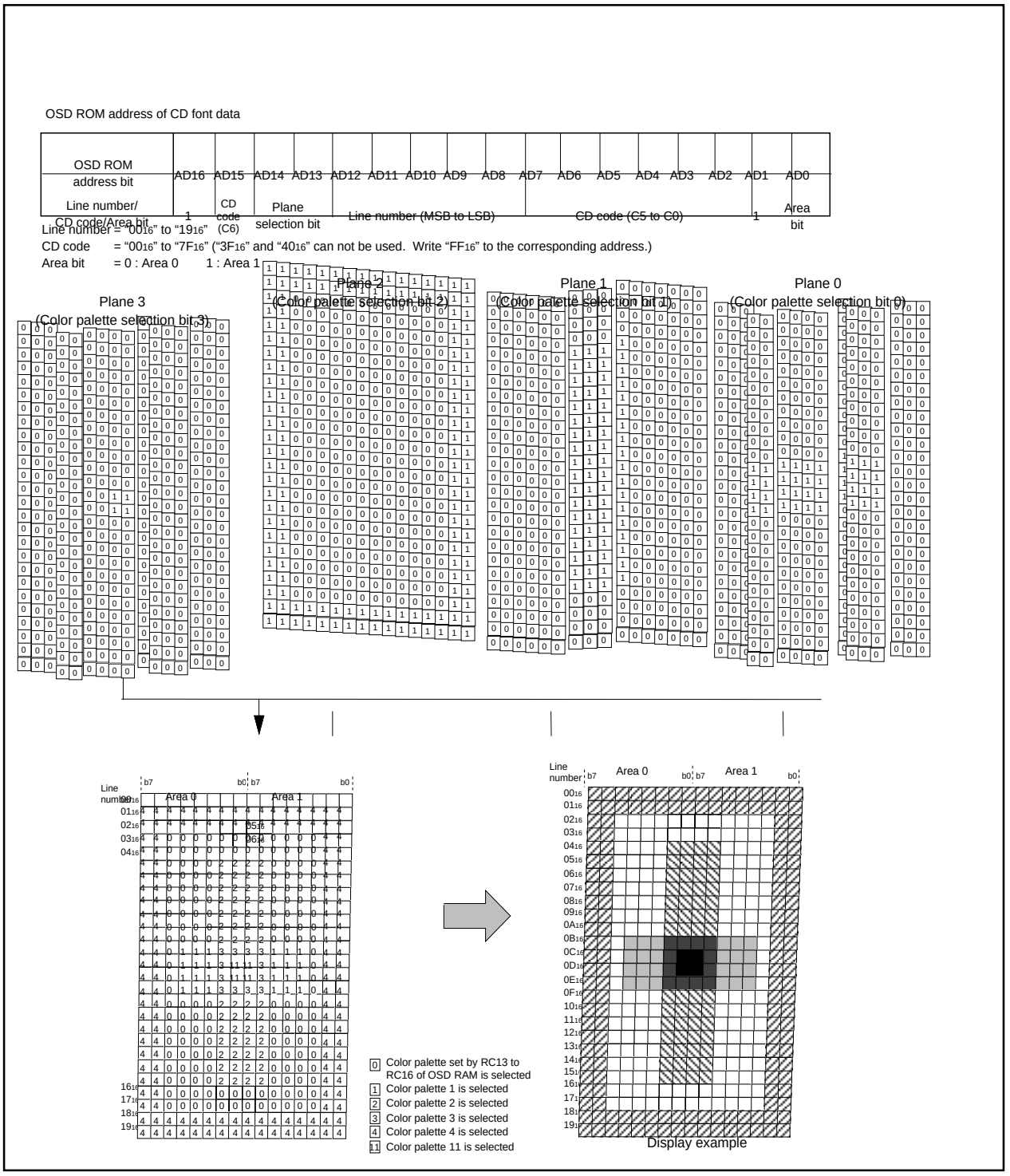

Figure 2.16.23 Color dot font data storing address

(2) OSD RAM (OSD RAM for character, addresses 0400_{16} to $0EFF_{16}$)

The OSD RAM for character is allocated at addresses 0400_{16} to $0EFF_{16}$, and is divided into a display character code specification part, color code 1 specification part, and color code 2 specification part for each block. The number of characters for 1 block (32- or 42-character mode) is selected by bit 1 of the OSD control register 4. Tables 2.16.3 to 2.16.7 show the address map.

For example, to display 1 character position (the left edge) in block 1, write the character code in address 0400_{16}, write color code 1 at 0401_{16}, and write color code 2 at 0480_{16}. The structure of the OSD RAM is shown in Figure 2.16.25.

Note : For blocks of the following dot sizes, the 3nth (n = 1 to 14) character is skipped as compared with ordinary block.

■In OSDL mode: all dot size.

■In OSDS and CDOSD modes of layer 2: 1.5Tc × 1/2H or 1.5Tc × 1H

Accordingly, maximum 22 characters (32-character mode)/28 characters (42-character mode) are only displayed in 1 block. Blocks with dot size of 1Tc × 1/2H and 1Tc × 1H, or blocks on the layer 1. The RAM data for the 3nth character does not effect the display. Any character data can be stored here. And also, note the following only in 32-character mode. As the character is displayed in the 28th's character area in 42-character mode, set ordinarily.

- In OSDS mode
  The character is not displayed, and only the left 1/3 part of the 22nd character back ground is displayed in the 22nd's character area. When not displaying this back-ground, set transparent for character background color.
- In OSDL mode
  Set a blank character or a character of transparent color to the 22nd character.
- In CDOSD mode
  The character is not displayed, and color palette color specified by bits 3 to 6 of color code 1 can be output in the 22nd's character area (left 1/3 part).

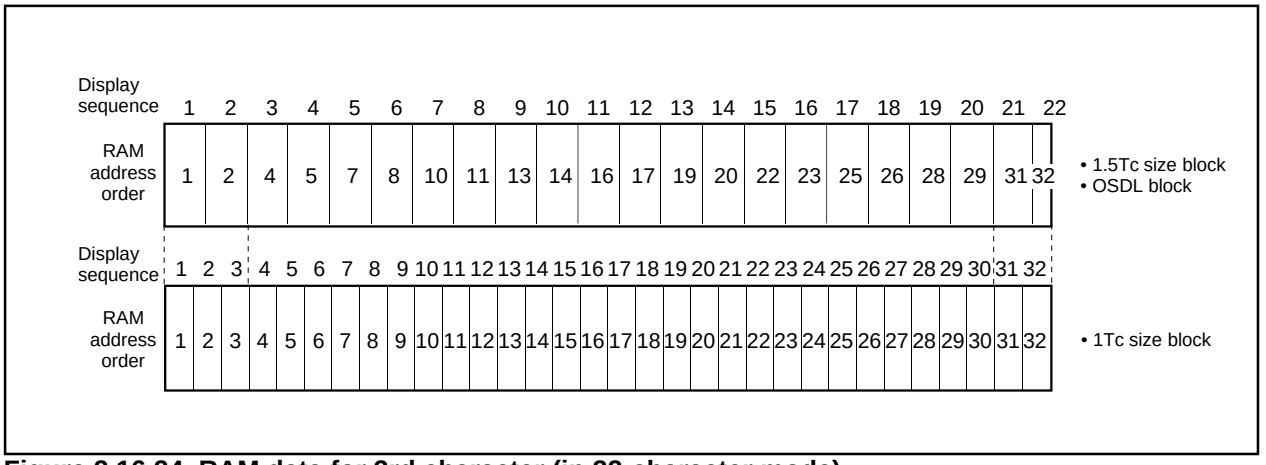

Figure 2.16.24 RAM data for 3rd character (in 32-character mode)

Table 2.16.3 Contents of OSD RAM (1st to 32nd character)

Block	Display Position (from left)	Character Code Specification	Color Code 1 Specification	Color Code 2 Specification
Block 1	1st character	0400_{16}	0401_{16}	0480_{16}
	2nd character : 31st character	0402_{16} : $043C_{16}$	0403_{16} : $043D_{16}$	0482_{16} : $04BC_{16}$
	32nd character	$043E_{16}$	$043F_{16}$	$04BE_{16}$
Block 2	1st character	0440_{16}	0441_{16}	$04C0_{16}$
	2nd character : 31st character	0442_{16} : $047C_{16}$	0443_{16} : $047D_{16}$	$04C2_{16}$: $04FC_{16}$
	32nd character	$047E_{16}$	$047F_{16}$	$04FE_{16}$
Block 3	1st character	0500_{16}	0501_{16}	0580_{16}
	2nd character : 31st character	0502_{16} : $053C_{16}$	0503_{16} : $053D_{16}$	0582_{16} : $05BC_{16}$
	32nd character	$053E_{16}$	$053F_{16}$	$05BE_{16}$
Block 4	1st character	0540_{16}	0541_{16}	$05C0_{16}$
	2nd character : 31st character	0542_{16} : $057C_{16}$	0543_{16} : $057D_{16}$	$05C2_{16}$: $05FC_{16}$
	32nd character	$057E_{16}$	$057F_{16}$	$05FE_{16}$
Block 5	1st character	0600_{16}	0601_{16}	0680_{16}
	2nd character : 31st character	0602_{16} : $063C_{16}$	0603_{16} : $063D_{16}$	0682_{16} : $06BC_{16}$
	32nd character	$063E_{16}$	$063F_{16}$	$06BE_{16}$
Block 6	1st character	0640_{16}	0641_{16}	$06C0_{16}$
	2nd character : 31st character	0642_{16} : $067C_{16}$	0643_{16} : $067D_{16}$	$06C2_{16}$: $06FC_{16}$
	32nd character	$067E_{16}$	$067F_{16}$	$06FE_{16}$
Block 7	1st character	0700_{16}	0701_{16}	0780_{16}
	2nd character : 31st character	0702_{16} : $073C_{16}$	0703_{16} : $073D_{16}$	0782_{16} : $07BC_{16}$
	32nd character	$073E_{16}$	$073F_{16}$	$07BE_{16}$
Block 8	1st character	0740_{16}	0741_{16}	$07C0_{16}$
	2nd character : 31st character	0742_{16} : $077C_{16}$	0743_{16} : $077D_{16}$	$07C2_{16}$: $07FC_{16}$
	32nd character	$077E_{16}$	$077F_{16}$	$07FE_{16}$
Block 9	1st character	0800_{16}	0801_{16}	0880_{16}
	2nd character : 31st character	0802_{16} : $083C_{16}$	0803_{16} : $083D_{16}$	0882_{16} : $08BC_{16}$
	32nd character	$083E_{16}$	$083F_{16}$	$08BE_{16}$
Block 10	1st character	0840_{16}	0841_{16}	$08C0_{16}$
	2nd character : 31st character	0842_{16} : $087C_{16}$	0843_{16} : $087D_{16}$	$08C2_{16}$: $08FC_{16}$
	32nd character	$087E_{16}$	$087F_{16}$	$08FE_{16}$

Table 2.16.4 Contents of OSD RAM (1st to 32nd character) (continued)

Block	Display Position (from left)	Character Code Specification	Color Code 1 Specification	Color Code 2 Specification
Block 11	1st character	0900_{16}	0901_{16}	0980_{16}
	2nd character : 31st character	0902_{16} : $093C_{16}$	0903_{16} : $093D_{16}$	0982_{16} : $09BC_{16}$
	32nd character	$093E_{16}$	$093F_{16}$	$09BE_{16}$
Block 12	1st character	0940_{16}	0941_{16}	$09C0_{16}$
	2nd character : 31st character	0942_{16} : $097C_{16}$	0943_{16} : $097D_{16}$	$09C2_{16}$: $09FC_{16}$
	32nd character	$097E_{16}$	$097F_{16}$	$09FE_{16}$
Block 13	1st character	$0A00_{16}$	$0A01_{16}$	$0A80_{16}$
	2nd character : 31st character	$0A02_{16}$: $0A3C_{16}$	$0A03_{16}$: $0A3D_{16}$	$0A82_{16}$: $0ABC_{16}$
	32nd character	$0A3E_{16}$	$0A3F_{16}$	$0ABE_{16}$
Block 14	1st character	$0A40_{16}$	$0A41_{16}$	$0AC0_{16}$
	2nd character : 31st character	$0A42_{16}$: $0A7C_{16}$	$0A43_{16}$: $0A7D_{16}$	$0AC2_{16}$: $0AFC_{16}$
	32nd character	$0A7E_{16}$	$0A7F_{16}$	$0AFE_{16}$
Block 15	1st character	$0B00_{16}$	$0B01_{16}$	$0B80_{16}$
	2nd character : 31st character	$0B02_{16}$: $0B3C_{16}$	$0B03_{16}$: $0B3D_{16}$	$0B82_{16}$: $0BBC_{16}$
	32nd character	$0B3E_{16}$	$0B3F_{16}$	$0BBE_{16}$
Block 16	1st character	$0B40_{16}$	$0B41_{16}$	$0BC0_{16}$
	2nd character : 31st character	$0B42_{16}$: $0B7C_{16}$	$0B43_{16}$: $0B7D_{16}$	$0BC2_{16}$: $0BF0_{16}$
	32nd character	$0B7E_{16}$	$0B7F_{16}$	$0BFE_{16}$

Table 2.16.5 Contents of OSD RAM (33rd to 42nd character)

Block	Display Position (from left)	Character Code Specification	Color Code 1 Specification	Color Code 2 Specification
Block 1	33rd character	$0C00_{16}$	$0C01_{16}$	$0C80_{16}$
	34th character	$0C02_{16}$	$0C03_{16}$	$0C82_{16}$
	:	:	:	:
	39th character	$0C0C_{16}$	$0C0D_{16}$	$0C8C_{16}$
	40th character	$0C0E_{16}$	$0C0F_{16}$	$0C8E_{16}$
	41st character	$0E00_{16}$	$0E01_{16}$	$0E80_{16}$
	42nd character	$0E02_{16}$	$0E03_{16}$	$0E82_{16}$
Block 2	33rd character	$0C10_{16}$	$0C11_{16}$	$0C90_{16}$
	34th character	$0C12_{16}$	$0C13_{16}$	$0C92_{16}$
	:	:	:	:
	39th character	$0C1C_{16}$	$0C1D_{16}$	$0C9C_{16}$
	40th character	$0C1E_{16}$	$0C1F_{16}$	$0C9E_{16}$
	41st character	$0E08_{16}$	$0E09_{16}$	$0E88_{16}$
	42nd character	$0E0A_{16}$	$0E0B_{16}$	$0E8A_{16}$
Block 3	33rd character	$0C20_{16}$	$0C21_{16}$	$0CA0_{16}$
	34th character	$0C22_{16}$	$0C23_{16}$	$0CA2_{16}$
	:	:	:	:
	39th character	$0C2C_{16}$	$0C2D_{16}$	$0CAC_{16}$
	40th character	$0C2E_{16}$	$0C2F_{16}$	$0CAE_{16}$
	41st character	$0E10_{16}$	$0E11_{16}$	$0E90_{16}$
	42nd character	$0E12_{16}$	$0E13_{16}$	$0E92_{16}$
Block 4	33rd character	$0C30_{16}$	$0C31_{16}$	$0CB0_{16}$
	34th character	$0C32_{16}$	$0C33_{16}$	$0CB2_{16}$
	:	:	:	:
	39th character	$0C3C_{16}$	$0C3D_{16}$	$0CBC_{16}$
	40th character	$0C3E_{16}$	$0C3F_{16}$	$0CBE_{16}$
	41st character	$0E18_{16}$	$0E19_{16}$	$0E98_{16}$
	42nd character	$0E1A_{16}$	$0E1B_{16}$	$0E9A_{16}$
Block 5	33rd character	$0C40_{16}$	$0C41_{16}$	$0CC0_{16}$
	34th character	$0C42_{16}$	$0C43_{16}$	$0CC2_{16}$
	:	:	:	:
	39th character	$0C4C_{16}$	$0C4D_{16}$	$0CCC_{16}$
	40th character	$0C4E_{16}$	$0C4F_{16}$	$0CCE_{16}$
	41st character	$0E20_{16}$	$0E21_{16}$	$0EA0_{16}$
	42nd character	$0E22_{16}$	$0E23_{16}$	$0EA2_{16}$
Block 6	33rd character	$0C50_{16}$	$0C51_{16}$	$0CD0_{16}$
	34th character	$0C52_{16}$	$0C53_{16}$	$0CD2_{16}$
	:	:	:	:
	39th character	$0C5C_{16}$	$0C5D_{16}$	$0CDC_{16}$
	40th character	$0C5E_{16}$	$0C5F_{16}$	$0CDE_{16}$
	41st character	$0E28_{16}$	$0E29_{16}$	$0EA8_{16}$
	42nd character	$0E2A_{16}$	$0E2B_{16}$	$0EAA_{16}$
Block 7	33rd character	$0C60_{16}$	$0C61_{16}$	$0CE0_{16}$
	34th character	$0C62_{16}$	$0C63_{16}$	$0CE2_{16}$
	:	:	:	:
	39th character	$0C6C_{16}$	$0C6D_{16}$	$0CEC_{16}$
	40th character	$0C6E_{16}$	$0C6F_{16}$	$0CEE_{16}$
	41st character	$0E30_{16}$	$0E31_{16}$	$0EB0_{16}$
	42nd character	$0E32_{16}$	$0E33_{16}$	$0EB2_{16}$

Table 2.16.6 Contents of OSD RAM (33rd to 42nd character) (continued)

Block	Display Position (from left)	Character Code Specification	Color Code 1 Specification	Color Code 2 Specification
Block 8	33rd character	$0C70_{16}$	$0C71_{16}$	$0CF0_{16}$
	34th character	$0C72_{16}$	$0C73_{16}$	$0CF2_{16}$
	:	:	:	:
	39th character	$0C7C_{16}$	$0C7D_{16}$	$0CFC_{16}$
	40th character	$0C7E_{16}$	$0C7F_{16}$	$0CFE_{16}$
	41st character	$0E38_{16}$	$0E39_{16}$	$0EB8_{16}$
	42nd character	$0E3A_{16}$	$0E3B_{16}$	$0EBA_{16}$
Block 9	33rd character	$0D00_{16}$	$0D01_{16}$	$0D80_{16}$
	34th character	$0D02_{16}$	$0D03_{16}$	$0D82_{16}$
	:	:	:	:
	39th character	$0D0C_{16}$	$0D0D_{16}$	$0D8C_{16}$
	40th character	$0D0E_{16}$	$0D0F_{16}$	$0D8E_{16}$
	41st character	$0E40_{16}$	$0E41_{16}$	$0EC0_{16}$
	42nd character	$0E42_{16}$	$0E43_{16}$	$0EC2_{16}$
Block 10	33rd character	$0D10_{16}$	$0D11_{16}$	$0D90_{16}$
	34th character	$0D12_{16}$	$0D13_{16}$	$0D92_{16}$
	:	:	:	:
	39th character	$0D1C_{16}$	$0D1D_{16}$	$0D9C_{16}$
	40th character	$0D1E_{16}$	$0D1F_{16}$	$0D9E_{16}$
	41st character	$0E48_{16}$	$0E49_{16}$	$0EC8_{16}$
	42nd character	$0E4A_{16}$	$0E4B_{16}$	$0ECA_{16}$
Block 11	33rd character	$0D20_{16}$	$0D21_{16}$	$0DA0_{16}$
	34th character	$0D22_{16}$	$0D23_{16}$	$0DA2_{16}$
	:	:	:	:
	39th character	$0D2C_{16}$	$0D2D_{16}$	$0DAC_{16}$
	40th character	$0D2E_{16}$	$0D2F_{16}$	$0DAE_{16}$
	41st character	$0E50_{16}$	$0E51_{16}$	$0ED0_{16}$
	42nd character	$0E52_{16}$	$0E53_{16}$	$0ED2_{16}$
Block 12	33rd character	$0D30_{16}$	$0D31_{16}$	$0DB0_{16}$
	34th character	$0D32_{16}$	$0D33_{16}$	$0DB2_{16}$
	:	:	:	:
	39th character	$0D3C_{16}$	$0D3D_{16}$	$0DBC_{16}$
	40th character	$0D3E_{16}$	$0D3F_{16}$	$0DBE_{16}$
	41st character	$0E58_{16}$	$0E59_{16}$	$0ED8_{16}$
	42nd character	$0E5A_{16}$	$0E5B_{16}$	$0EDA_{16}$
Block 13	33rd character	$0D40_{16}$	$0D41_{16}$	$0DC0_{16}$
	34th character	$0D42_{16}$	$0D43_{16}$	$0DC2_{16}$
	:	:	:	:
	39th character	$0D4C_{16}$	$0D4D_{16}$	$0DCC_{16}$
	40th character	$0D4E_{16}$	$0D4F_{16}$	$0DCE_{16}$
	41st character	$0E60_{16}$	$0E61_{16}$	$0EE0_{16}$
	42nd character	$0E62_{16}$	$0E63_{16}$	$0EE2_{16}$
Block 14	33rd character	$0D50_{16}$	$0D51_{16}$	$0DD0_{16}$
	34th character	$0D52_{16}$	$0D53_{16}$	$0DD2_{16}$
	:	:	:	:
	39th character	$0D5C_{16}$	$0D5D_{16}$	$0DDC_{16}$
	40th character	$0D5E_{16}$	$0D5F_{16}$	$0DDE_{16}$
	41st character	$0E68_{16}$	$0E69_{16}$	$0EE8_{16}$
	42nd character	$0E6A_{16}$	$0E6B_{16}$	$0EEA_{16}$

Table 2.16.7 Contents of OSD RAM (33rd to 42nd character) (continued)

Block	Display Position (from left)	Character Code Specification	Color Code 1 Specification	Color Code 2 Specification
Block 15	33rd character	$0D60_{16}$	$0D61_{16}$	$0DE0_{16}$
	34th character	$0D62_{16}$	$0D63_{16}$	$0DE2_{16}$
	:	:	:	:
	39th character	$0D6C_{16}$	$0D6D_{16}$	$0DEC_{16}$
	40th character	$0D6E_{16}$	$0D6F_{16}$	$0DEE_{16}$
	41st character	$0E70_{16}$	$0E71_{16}$	$0EF0_{16}$
	42nd character	$0E72_{16}$	$0E73_{16}$	$0EF2_{16}$
Block 16	33rd character	$0D70_{16}$	$0D71_{16}$	$0DF0_{16}$
	34th character	$0D72_{16}$	$0D73_{16}$	$0DF2_{16}$
	:	:	:	:
	39th character	$0D7C_{16}$	$0D7D_{16}$	$0DFC_{16}$
	40th character	$0D7E_{16}$	$0D7F_{16}$	$0DFE_{16}$
	41st character	$0E78_{16}$	$0E79_{16}$	$0EF8_{16}$
	42nd character	$0E7A_{16}$	$0E7B_{16}$	$0EFA_{16}$

Blocks 1 to 16

b2	b1	b0	b7							b0	b7							b0
C9	RC21	RC20	RC17	RC16	RC15	RC14	RC13	RC12	RC11	C8	C7	C6	C5	C4	C3	C2	C1	C0

Color code 2 — Color code 1 — Character code

Bit	CC mode		OSDS/L/P mode		CDOSD mode	
	Bit name	Function	Bit name	Function	Bit name	Function
C0 C1 C2 C3 C4 C5 C6 C7 C8	Character code (Low-order 9 bits)	Specify character code in OSD ROM	Character code (Low-order 9 bits)	Specify character code in OSD ROM	CD code (7 bits)	Specify character code in OSD ROM (color dot)
					Not used	———
RC11 RC12 RC13	Character: Color palette selection bit 0 Color palette selection bit 1 Color palette selection bit 2	Specify color palette for character (See note 3)	Character: Color palette selection bit 0 Color palette selection bit 1 Color palette selection bit 2 Color palette selection bit 3	Specify color palette for character (See note 3)	Dot color: Color palette selection bit 0 Color palette selection bit 1 Color palette selection bit 2 Color palette selection bit 3	Specify a dot which selects color palette 0 by OSD ROM (See note 4)
RC14	Italic control	0: Italic OFF 1: Italic ON				
RC15	Flash control	0: Flash OFF 1: Flash ON	Character background: Color palette selection bit 0 Color palette selection bit 1	Specify color palette for character (See note 3)		
RC16	Underline control	0: Underline OFF 1: Underline ON				
RC17	OUT2 output control	0: OUT2 output OFF 1: OUT2 output ON	OUT2 output control	0: OUT2 output OFF 1: OUT2 output ON	OUT2 output control	0: OUT2 output OFF 1: OUT2 output ON
RC20 RC21	Character background: Color palette selection bit 0 Color palette selection bit 1	Specify color palette for background (See note 3)	Character background: Color palette selection bit 2 Color palette selection bit 3	Specify color palette for background (See note 3)	Not used	———
C9	Character code (High-order 1 bit)	Specify character code in OSD ROM	Character code (High-order 1 bit)	Specify character code in OSD ROM	Not used	———

Notes 1: Read value of bits 3 to 7 of the color code 2 is undefined.
2: For “not used” bits, the write value is read.
3: Refer to Figure 2.16.26.
4: Only in CDOSD mode, a dot which selects color palette 0 is colored to the color palette set by RC13 to RC16 of OSD RAM in character units. When the character size is 1.5Tc × 1H or 1.5Tc × 1/2H, however, set RCI3 to RC16 and RC17 of all characters (including the 3nth character) within the same block to the same value.

Figure 2.16.25 Structure of OSD RAM

(3) OSD RAM (OSD RAM for SPRITE, addresses 1000_{16} to $13E7_{16}$)

The OSD RAM for SPRITE fonts 1 and 2, consisting of 4 planes for each font, is assigned to addresses 1000_{16} to $13E7_{16}$. Each plane corresponds to each color palette selection bit and the color palette of each dot is determined from among 16 kinds.

Table 2.16.8 OSD RAM address (SPRITE font 1)

Planes	Plane 3 (Color paleltte selection bit 3)				Plane 2 (Color paleltte selection bit 2)				Plane 1 (Color paleltte selection bit 1)				Plane 0 (Color paleltte selection bit 0)			
Dots	1 to 8	9 to 16	17 to 24	25 to 32	1 to 8	9 to 16	17 to 24	25 to 32	1 to 8	9 to 16	17 to 24	25 to 32	1 to 8	9 to 16	17 to 24	25 to 32
Bits	b7 to b0	b7 to b0	b7 to b0	b7 to b0	b7 to b0	b7 to b0	b7 to b0	b7 to b0	b7 to b0	b7 to b0	b7 to b0	b7 to b0	b7 to b0	b7 to b0	b7 to b0	b7 to b0
Line 1	$10C0_{16}$	$10C1_{16}$	$11C0_{16}$	$11C1_{16}$	1080_{16}	1081_{16}	1180_{16}	1181_{16}	1040_{16}	1041_{16}	1140_{16}	1141_{16}	1000_{16}	1001_{16}	1100_{16}	1101_{16}
Line 2	$10C2_{16}$	$10C3_{16}$	$11C2_{16}$	$11C3_{16}$	1082_{16}	1083_{16}	1182_{16}	1183_{16}	1042_{16}	1043_{16}	1142_{16}	1143_{16}	1002_{16}	1003_{16}	1102_{16}	1103_{16}
⋮	⋮	⋮	⋮	⋮	⋮	⋮	⋮	⋮	⋮	⋮	⋮	⋮	⋮	⋮	⋮	⋮
Line 19	$10E4_{16}$	$10E5_{16}$	$11E4_{16}$	$11E5_{16}$	$10A4_{16}$	$10A5_{16}$	$11A4_{16}$	$11A5_{16}$	1064_{16}	1065_{16}	1164_{16}	1165_{16}	1024_{16}	1025_{16}	1124_{16}	1125_{16}
Line 20	$10E6_{16}$	$10E7_{16}$	$11E6_{16}$	$11E7_{16}$	$10A6_{16}$	$10A7_{16}$	$11A6_{16}$	$11A7_{16}$	1066_{16}	1067_{16}	1166_{16}	1167_{16}	1026_{16}	1027_{16}	1126_{16}	1127_{16}

Table 2.16.9 OSD RAM address (SPRITE font 2)

Planes	Plane 3 (Color paleltte selection bit 3)				Plane 2 (Color paleltte selection bit 2)				Plane 1 (Color paleltte selection bit 1)				Plane 0 (Color paleltte selection bit 0)			
Dots	1 to 8	9 to 16	17 to 24	25 to 32	1 to 8	9 to 16	17 to 24	25 to 32	1 to 8	9 to 16	17 to 24	25 to 32	1 to 8	9 to 16	17 to 24	25 to 32
Bits	b7 to b0	b7 to b0	b7 to b0	b7 to b0	b7 to b0	b7 to b0	b7 to b0	b7 to b0	b7 to b0	b7 to b0	b7 to b0	b7 to b0	b7 to b0	b7 to b0	b7 to b0	b7 to b0
Line 1	$12C0_{16}$	$12C1_{16}$	$13C0_{16}$	$13C1_{16}$	1280_{16}	1281_{16}	1380_{16}	1381_{16}	1240_{16}	1241_{16}	1340_{16}	1341_{16}	1200_{16}	1201_{16}	1300_{16}	1301_{16}
Line 2	$12C2_{16}$	$12C3_{16}$	$13C2_{16}$	$13C3_{16}$	1282_{16}	1283_{16}	1382_{16}	1383_{16}	1242_{16}	1243_{16}	1342_{16}	1343_{16}	1202_{16}	1203_{16}	1302_{16}	1303_{16}
⋮	⋮	⋮	⋮	⋮	⋮	⋮	⋮	⋮	⋮	⋮	⋮	⋮	⋮	⋮	⋮	⋮
Line 19	$12E4_{16}$	$12E5_{16}$	$13E4_{16}$	$13E5_{16}$	$12A4_{16}$	$12A5_{16}$	$13A4_{16}$	$13A5_{16}$	1264_{16}	1265_{16}	1364_{16}	1365_{16}	1224_{16}	1225_{16}	1324_{16}	1325_{16}
Line 20	$12E6_{16}$	$12E7_{16}$	$13E6_{16}$	$13E7_{16}$	$12A6_{16}$	$12A7_{16}$	$13A6_{16}$	$13A7_{16}$	1266_{16}	1267_{16}	1366_{16}	1367_{16}	1226_{16}	1227_{16}	1326_{16}	1327_{16}

Dot structure of SPRITE font

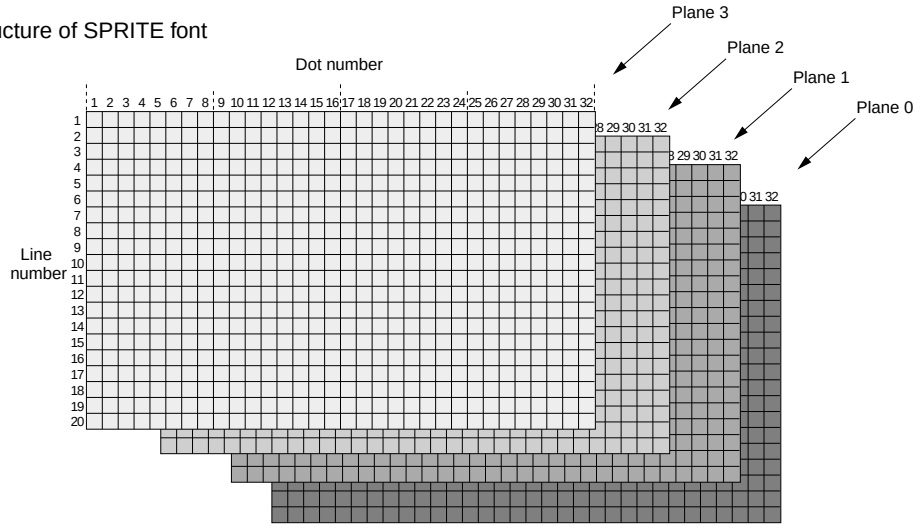

2.16.7 Character Color

As shown in Figure 2.16.26, there are 16 built-in color codes. Color palette 0 is fixed at transparent, and color palette 8 is fixed at black. The remaining 14 colors can be set to any of the 512 colors available. The setting procedure for character colors is as follows:

- CC mode ..... 8 kinds
  Color palette selection range (color palettes 0 to 7 or 8 to 15) can be selected by bit 0 of the OSD control register 3 (address 0207_{16}). Color palettes are set by bits RC11 to RC13 of the OSD RAM from among the selection range.
- OSDS/L/P mode ..... 16 kinds
  Color palettes are set by bits RC11 to RC14 of the OSD RAM.
- CDOSD mode ..... 16 kinds
  Color palettes are set in dot units according to CD font data.
  Only in CDOSD mode, a dot which selects color palette 0 or 8 is colored to the color palette set by RC13 to RC16 of OSD RAM in character units (refer to Figure 2.16.28).
- SPRITE display ..... 16 kinds
  Color palettes are set in dot units according to the CD font data.

Notes 1: Color palette 8 is always selected for bordering and solid space output (OUT 1 output) regardless of the set value in the register.

2: Color palette 0 (transparent) and the transparent setting of other color palettes will differ. When there are multiple layers overlapping (on top of each other, piled up), and the priority layer is color palette 0 (transparent), the bottom layer is displayed, but if the priority layer is the transparent setting of any other color palette, the background is displayed without displaying the bottom layer (refer to Figure 2.16.28).

2.16.8 Character Background Color

The display area around the characters can be colored in with a character background color. Character background colors are set in character units.

- CC mode ..... 4 kinds
  Color palette selection range (color codes 0 to 3, 4 to 7, 8 to 11, or 12 to 15) can be selected by bits 1 and 2 of the OSD control register 3 (address 0207_{16}). Color palettes are set by bits RC20 and RC21 of the OSD RAM from among the selection range.
- OSDS/L/P mode ..... 16 kinds
  Color palettes are set by bits RC15, RC16, RC20, and RC21 of the OSD RAM.

Note: The character background is displayed in the following part:
(character display area) – (character font) – (border).
Accordingly, the character background color and the color signal for these two sections cannot be mixed.

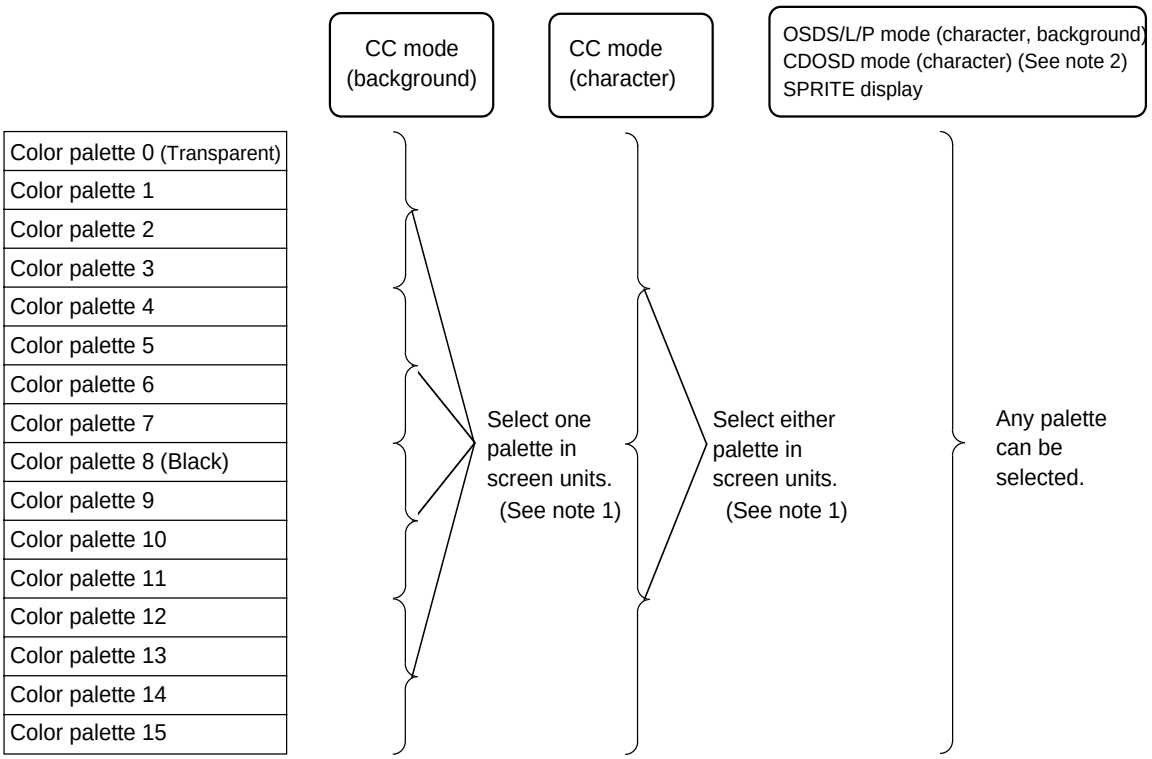

Notes 1: Color palettes are selected by OSD control register 3 (address 0207_{16}).
2: Only in CDOSD mode, a dot which selects color palette 0 or 8 is colored to of OSD RAM in character units.

Figure 2.16.26 Color palette selection

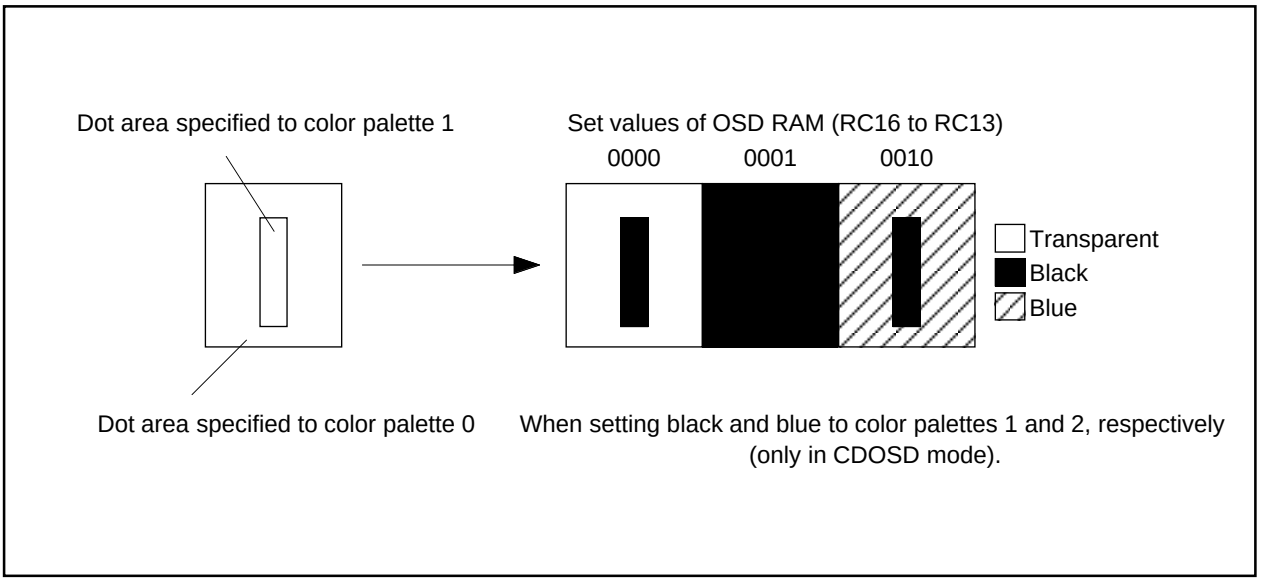

Figure 2.16.27 Set of color palette 0 or 8 in CDOSD mode

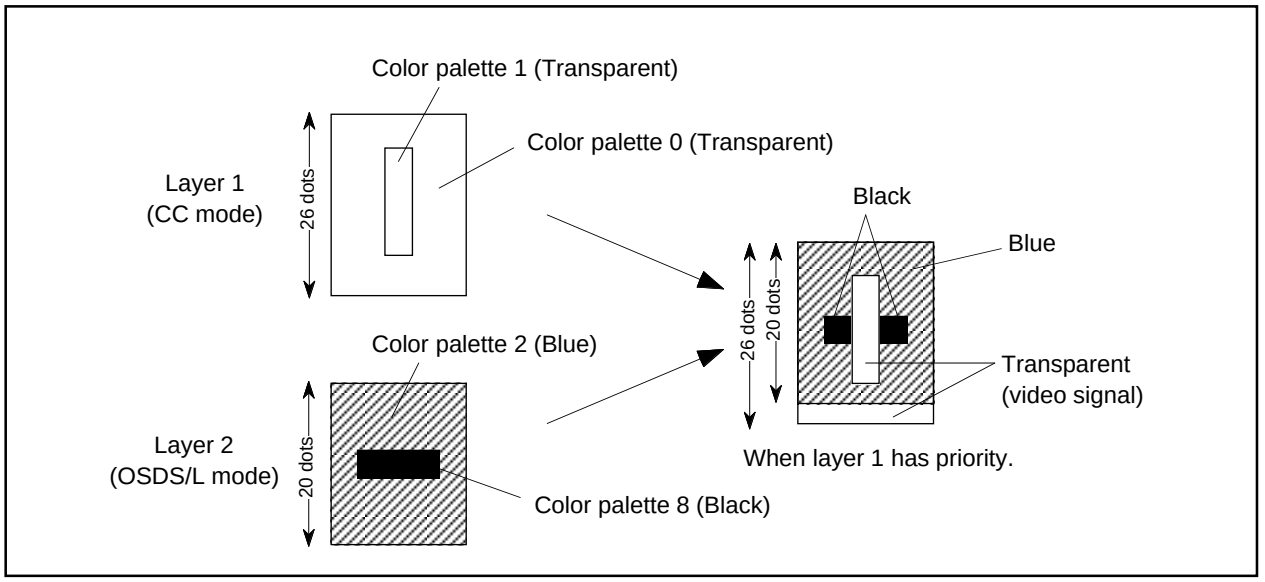

Figure 2.16.28 Difference between color palette 0 (transparent) and transparent setting of other color palettes

OSD control register 3

b7	b6	b5	b4	b3	b2	b1	b0
				0			

Symbol	Address	When reset
OC3	0207_{16}	00_{16}

Bit symbol	Bit name	Function	R	W
OC30	CC mode character color selection bit	0: Color palettes 0 to 7 1: Color palettes 8 to 15	○	○
OC31	CC mode character background color selection bits (See note)	b2 b1 0 0: Color palettes 0 to 3 0 1: Color palettes 4 to 7 1 0: Color palettes 8 to 11 1 1: Color palettes 12 to 15	○	○
OC32			○	○
Reserved bits		Must always be set to “0”	○	○
OC34	Flash cycle selection bit	0: 1 cycle = V_{SYNC} cycle × 32 1: 1 cycle = V_{SYNC} cycle × 64	○	○
OC35	OSDS/L/P mode window control bit	0: Window OFF 1: Window ON	○	○
OC36	CC mode window control bit	0: Window OFF 1: Window ON	○	○
OC37	CDOSD mode window control bit	0: Window OFF 1: Window ON	○	○

Note: Color palette 8 is always selected for solid space (when OUT1 output is selected), regardless of value of this register.

Figure 2.16.29 OSD control register 3

Color palette register i

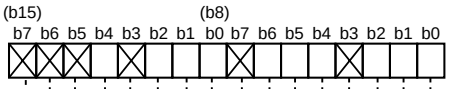

Symbol	Addresses	When reset
CRi (i = 1 to 7)	Even addresses within addresses 0240_{16} to $024D_{16}$, Odd addresses within addresses 0240_{16} to $024D_{16}$	Indeterminate
CRi (i = 8 to 15)	Even addresses within addresses $024E_{16}$ to $025B_{16}$, Odd addresses within addresses $024E_{16}$ to $025B_{16}$	Indeterminate

Bit symbol	Bit name	Function	R	W
CRi_2 to CRi_0	R signal output control bits	b2 b1 b0 0 0 0 : Vss 0 0 1 : 1/7Vcc 0 1 0 : 2/7Vcc 0 1 1 : 3/7Vcc 1 0 0 : 4/7Vcc 1 0 1 : 5/7Vcc 1 1 0 : 6/7Vcc 1 1 1 : Vcc	○	○
Nothing is assined. In an attempt to write to this bit, write “0.” The value, if read, turns out to be indeterminate.			—	—
CRi_6 to CRi_4	G signal output control bits	b6 b5 b4 0 0 0 : Vss 0 0 1 : 1/7Vcc 0 1 0 : 2/7Vcc 0 1 1 : 3/7Vcc 1 0 0 : 4/7Vcc 1 0 1 : 5/7Vcc 1 1 0 : 6/7Vcc 1 1 1 : Vcc	○	○
Nothing is assined. In an attempt to write to this bit, write “0.” The value, if read, turns out to be indeterminate.			—	—
CRi_10 to CRi_8	B signal output control bits	b10 b9 b8 0 0 0 : Vss 0 0 1 : 1/7Vcc 0 1 0 : 2/7Vcc 0 1 1 : 3/7Vcc 1 0 0 : 4/7Vcc 1 0 1 : 5/7Vcc 1 1 0 : 6/7Vcc 1 1 1 : Vcc	○	○
Nothing is assined. In an attempt to write to this bit, write “0.” The value, if read, turns out to be indeterminate.			—	—
CRi_12	OUT1 signal output control bit	0: No output 1: Output	○	○
Nothing is assined. In an attempt to write to this bit, write “0.” The value, if read, turns out to be indeterminate.			—	—

Figure 2.16.30 Color palette register i (i = 1 to 7, 9 to 15)

2.16.9 OUT1, OUT2 Signals

The OUT1, OUT2 signals are used to control the luminance of the video signal. The output waveform of the OUT1, OUT2 signals is controlled by bit 6 of the color palette register i (refer to Figure 2.16.30), bits 0 to 2 of the block control register i (refer to Figure 2.16.4) and RC17 of OSD RAM. The setting values for controlling OUT1, OUT2 and the corresponding output waveform is shown in Figure 2.16.31.

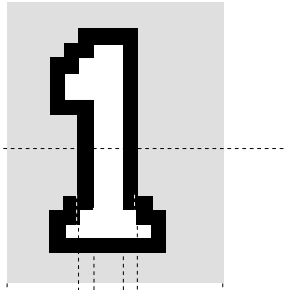

	Conditions				
	OUT2 output control (RC 17 of OSD RAM)	Border output	OUT1 signal output control bit (See note 2) bit12(CRi12) of color pallet register i		Output waveform
			Background	Character	
OUT1 signal	×	No output	0	0	H L
				1	H L
			1	0	H L
				1	H L
		Output (See note 1)	0	0	H L
				1	H L
			1	0	H L
				1	H L
OUT2 signal	0	×	×	×	H L
	1	×	×	×	H L

Notes 1: This control is only valid in the OSDS/P mode. It is invalid in CC/CDOSD/OSDL mode .
2: In the CDOSD mode, coloring is performed for each dot. Accordingly, OUT1 outputs to dots which bit 12 (CRi12) of the color pallet register i is set to “0.”
3: OUT2 cannot be output in sprite OSD.
4: × is an arbitrary value.

Figure 2.16.31 Setting value for controlling OUT1, OUT2 and corresponding output waveform

2.16.10 Attribute

The attributes (flash, underline, italic fonts) are controlled to the character font. The attributes for each character are specified by RC14 to RC16 of OSD RAM (refer to Figure 2.16.26). The attributes to be controlled are different depending on each mode.

CC mode ..... Flash, underline, italic for each character

OSDS/P mode ..... Border (all bordered, shadow bordered can be selected) for each block

(1) Under line

The underline is output at the 23rd and 24th lines in vertical direction only in the CC mode. The underline is controlled by RC16 of OSD RAM. The color of underline is the same color as that of the character font.

(2) Flash

The parts of the character font, the underline, and the character background are flashed only in the CC mode. The flash for each character is controlled by RC15 of OSD RAM. The ON/OFF for flash is controlled by bit 3 of the OSD control register 1 (refer to Figure 2.16.3). When this bit is “0, ” only character font and underline flash. When “1,” for a character without solid space output, R, G, B and OUT1 (all display area) flash, for a character with solid space output, only R, G, and B (all display area) flash. The flash cycle bases on the VSYNC count and is selected by bit 4 of OSD control register 3.

<NTSC method>

■ When bit 4 = “0” · VSYNC cycle × 24 ≈ 400 ms (at flash ON)
· VSYNC cycle × 8 ≈ 133 ms (at flash OFF)

■ When bit 4 = “1” · VSYNC cycle × 48 ≈ 800 ms (at flash ON)
· VSYNC cycle × 8 ≈ 133 ms (at flash OFF)

(3) Italic

The italic is made by slanting the font stored in OSD ROM to the right only in the CC mode. The italic is controlled by RC14 of OSD RAM.

The display example attribute is shown in Figure 2.16.33. In this case, “R” is displayed.

Notes 1: When setting both the italic and the flash, the italic character flashes.

2: When a flash character (with flash character background) adjoin on the right side of a non-flash italic character, parts out of the non-flash italic character is also flashed.

3: OUT2 is not flashed.

4: When the pre-divide ratio = 1, the italic character with slant of 1 dot × 5 steps is displayed ; when the pre-divide ratio = 2, the italic character with slant of 1/2 dot × 10 steps is displayed (refer to Figure 2.16.32 (c), (d)). However, when displaying the italic character with the pre-divide ratio = 1, set the OSD clock frequency to 11 MHz to 14 MHz.

5: The boundary of character color is displayed in italic. However, the boundary of character background color is not affected by the italic (refer to Figure 2.16.33).

6: The adjacent character (one side or both side) to an italic character is displayed in italic even when the character is not specified to display in italic (refer to Figure 2.16.33).

7: When displaying the 32nd character (in 32-character mode)/42nd character (in 42-character mode) in the italic and when solid space is off (OC14 = “0”), parts out of character area is not displayed (refer to Figure 2.16.33).

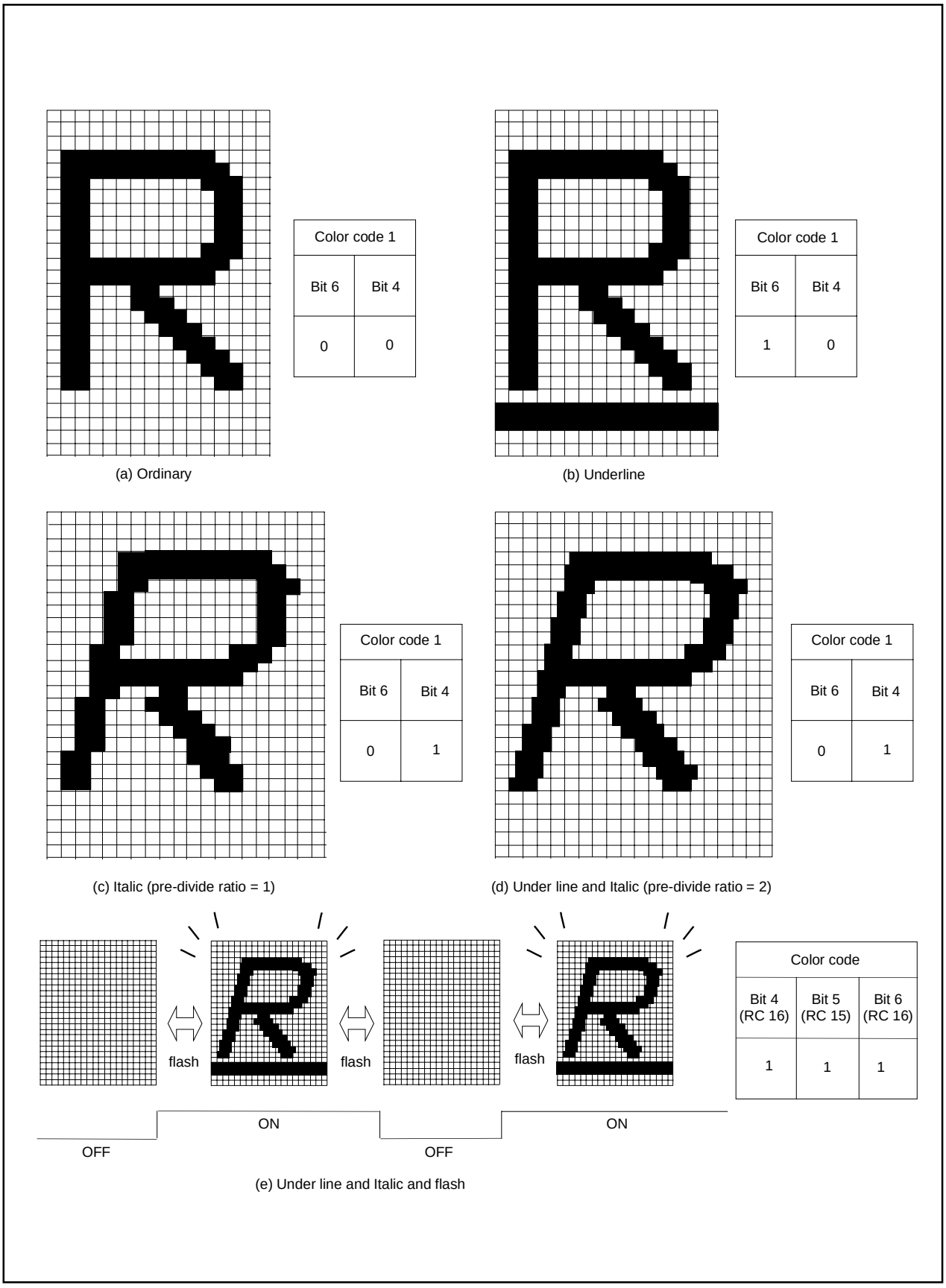

Figure 2.16.32 Example of attribute display (in CC mode)

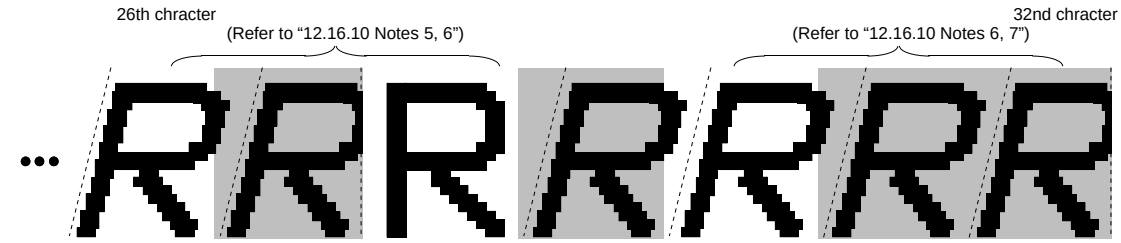

Notes 1 : The dotted line is the boundary of character color.
2 : When bit 4 of OSD control register 1 is “0.”

Figure 2.16.33 Example of italic display

(4) Border

The border is output in the OSDS/P mode. The all bordered (bordering around of character font) and the shadow bordered (bordering right and bottom sides of character font) are selected (refer to Figure 2.16.34) by bit 2 of the OSD control register 1 (refer to Figure 2.16.3). The ON/OFF switch for borders can be controlled in block units by bits 0 to 2 of the block control register i (refer to Figure 2.16.4).
The OUT1 signal is used for border output. The border color is fixed at color palette 8 (block). The border color for each screen is specified by the border color register i.
The horizontal size (x) of border is 1Tc (OSD clock cycle divided in the pre-divide circuit) regardless of the character font dot size. However, only when the pre-divide ratio = 2 and character size = 1.5Tc, the horizontal size is 1.5Tc. The vertical size (y) different depending on the screen scan mode and the vertical dot size of character font.

Notes 1 : The border dot area is the shaded area as shown in Figure 2.16.36.
2 : When the border dot overlaps on the next character font, the character font has priority (refer to Figure 2.16.37 A). When the border dot overlaps on the next character back ground, the border has priority (refer to Figure 2.16.37 B).
3 : The border in vertical out of character area is not displayed (refer to Figure 2.16.38).

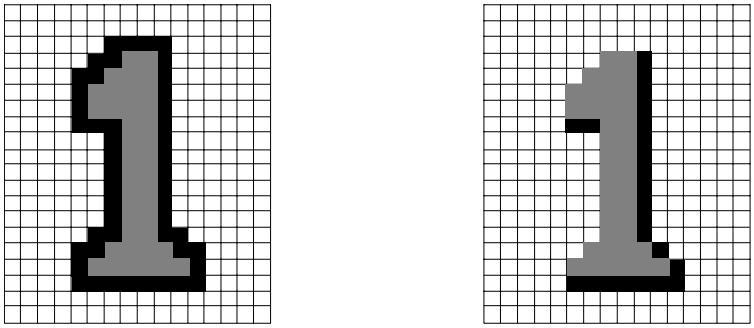

Figure 2.16.34 Example of border display

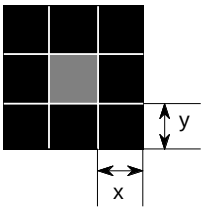

Scan mode / Vertical dot size of character font / Border dot size	Normal scan mode		Bi-scan mode
	1/2H	1H, 2H, 3H	1/2H, 1H, 2H, 3H
Horizontal size (x)	1Tc (OSD clock cycle divided in pre-divide circuit) 1.5Tc when selecting 1.5Tc for character size.		
Vertical size (y)	1/2H	1H	1H

Figure 2.16.35 Horizontal and vertical size of border

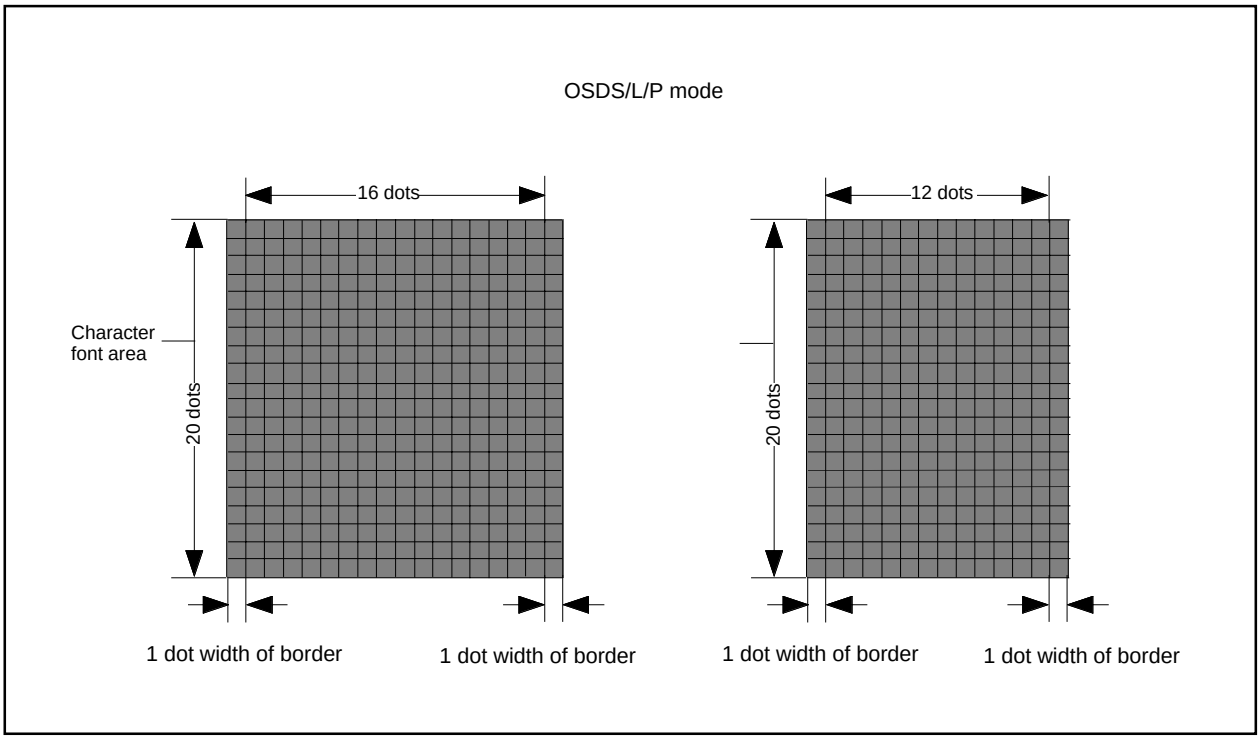

Figure 2.16.36 Border area

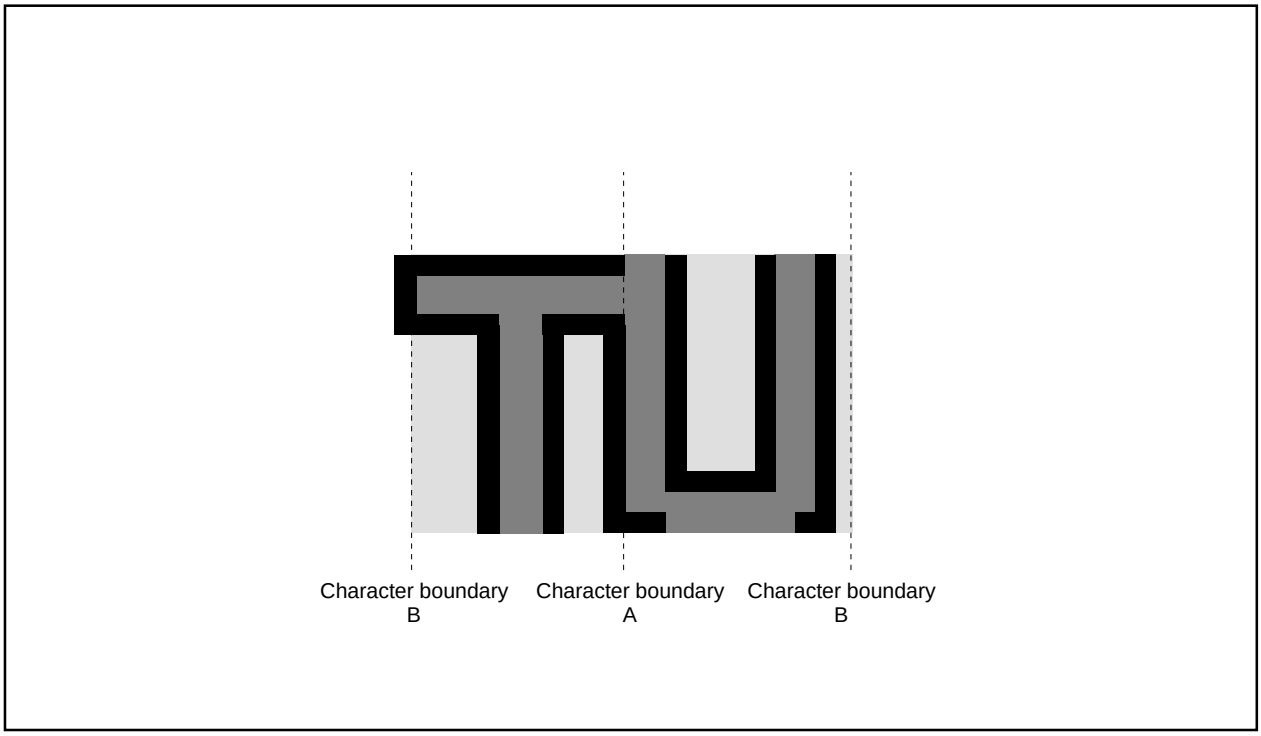

Figure 2.16.37 Border priority

2.16.11 Automatic Solid Space Function

This function generates automatically the solid space (OUT1 or OUT2 blank output) of the character area in the CC mode.

The solid space is output in the following area :

• the character area except character code “009$_{16}$ ”

•the character area on the left and right sides

This function is turned on and off by bit 4 of the OSD control register 1 (refer to Figure 2.16.3).

OUT1 or OUT2 output is selected by bit 3 of the OSD control register 2.

Notes 1: When selecting OUT1 as solid space output, character background color with solid space output is fixed to color palette 8 (black) regardless of setting.

2: When selecting any font except blank font as the character code “009$_{16}$,” the set font is output.

Table 2.16.10 Setting for automatic solid space

Bit 4 of OSD control register 1	0				1			
Bit 3 of OSD control register 2	0		1		0		1	
RC17 of OSD RAM	0	1	0	1	0	1	0	1
OUT1 output signal	•Character font area •Character background area		•Character font area •Character background area		•Solid space area		•Character font area •Character background area	
OUT2 output signal	OFF	•Character display area	OFF	•Character display area	OFF	•Character display area	•Solid space	•Solid space •Character display area

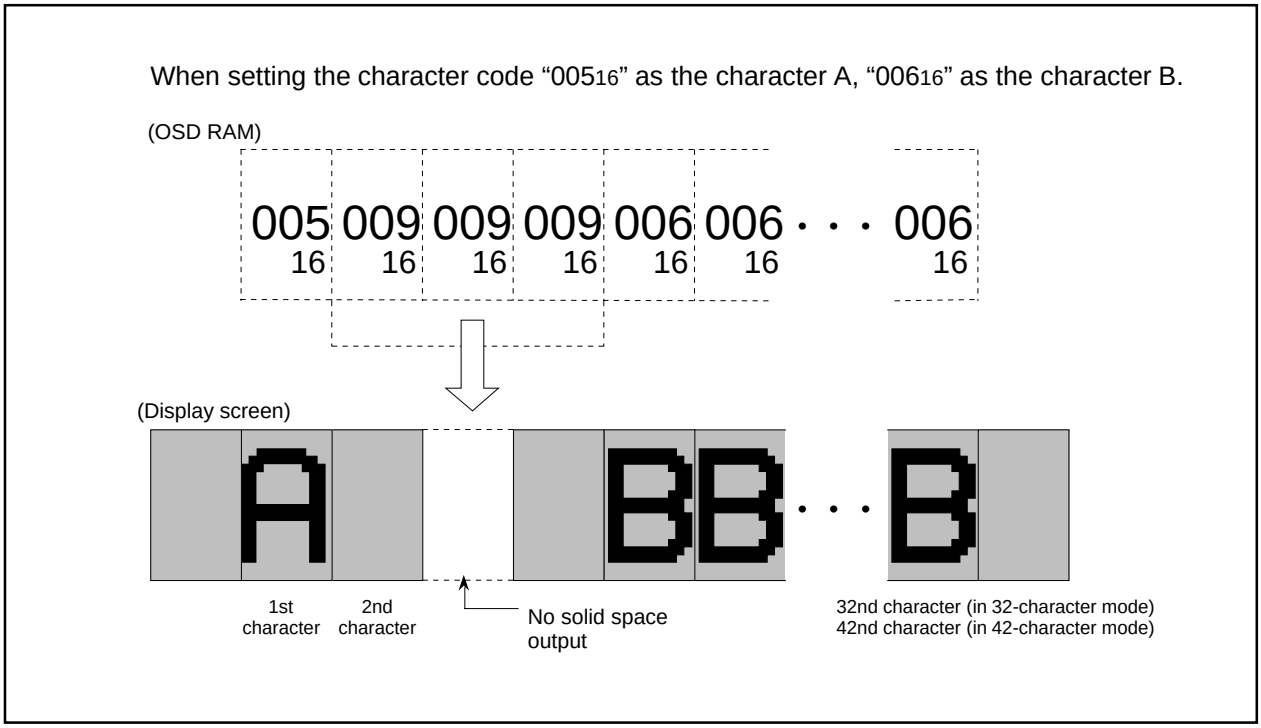

Figure 2.16.38 Display screen example of automatic solid space

2.16.12 Particular OSD Mode Block

This function can display with mixing the fonts below within the OSDP mode block.

<horizontal dot structure with vertical dot structure of 20 dots>

- 16 dots
- 12 dots
- 8 dots
- 4 dots

Each font is selected by a character code. Figure 2.16.39 shows the display example of particular OSD mode block and Table 2.16.11 shows the corresponding between character codes and display fonts.

Note: As for 8 × 20-dot and 4 × 20-dot fonts, only these character background color can be displayed. And also, any character is not displayed on the right side area nor any following areas of these fonts.

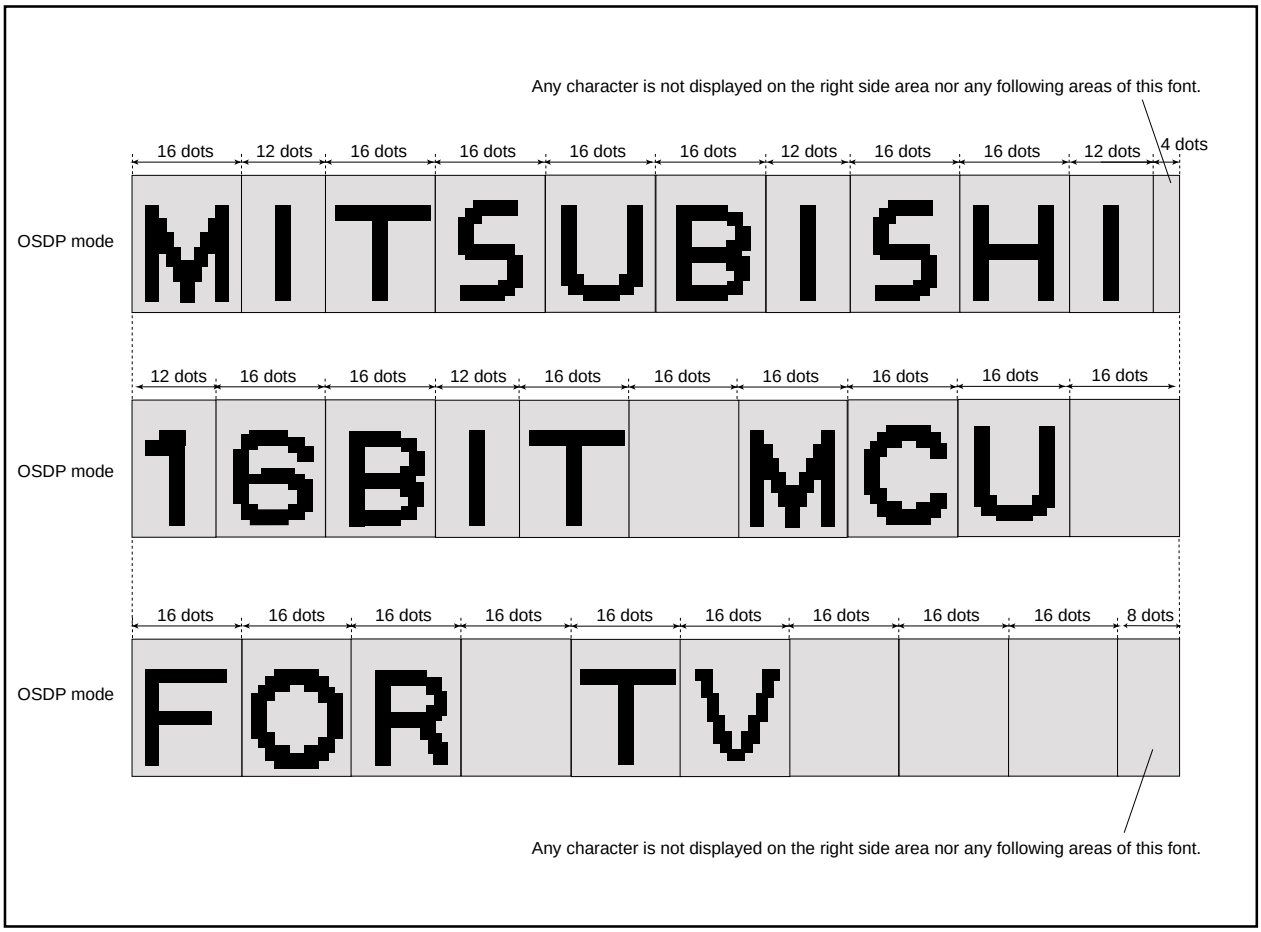

Figure 2.16.39 Display example of OSD mode block

Table 2.16.11 Corresponding between character codes and display fonts

Character code	Display fonts	Notes
000_{16} to $0EF_{16}$, 100_{16} to $2FF_{16}$ (except 100_{16}, 180_{16}, 200_{16}, 280_{16})	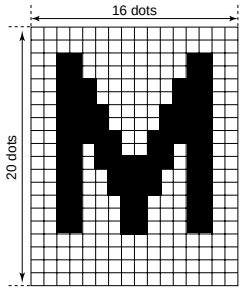	
$0F0_{16}$ to $0FD_{16}$	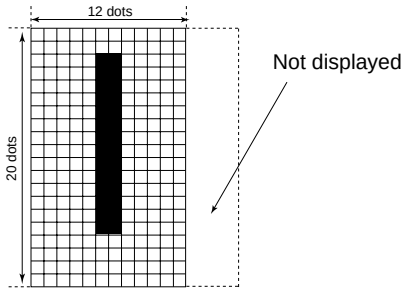	• The left 12-dot part (16 × 12 dots) of set font is displayed. • In CC and OSDS modes, entire part (16 × 20 dots) of set font is displayed.
$3FE_{16}$	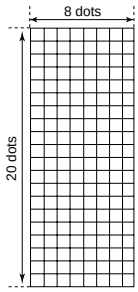	• The blank font (only character background) is displayed. • Any character is not displayed on the right side area nor any following areas of this font. • Do not set this font for the 1st character (left edge) of a block.
$3FF_{16}$	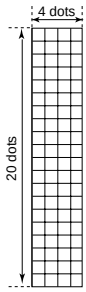	• The blank font (only character background) is displayed. • Any character is not displayed on the right side area nor any following areas of this font. • Do not set this font for the 1st character (left edge) of a block.

2.16.13 Multiline Display

This microcomputer can ordinarily display 16 lines on the CRT screen by displaying 16 blocks at different vertical positions. In addition, it can display up to 16 lines by using OSD1 interrupts.

An OSD1 interrupt request occurs at the point at which display of each block has been completed. In other words, when a scanning line reaches the point of the display position (specified by the vertical position registers) of a certain block, the character display of that block starts, and an interrupt occurs at the point at which the scanning line exceeds the block. The mode in which an OSD1 interrupt occurs is different depending on the setting of the OSD control register 2 (refer to Figure 2.16.7).

- When bit 7 of the OSD control register 2 is “0”
  An OSD1 interrupt request occurs at the completion of layer 1 block display.
- When bit 7 of the OSD control register 2 is “1”
  An OSD1 interrupt request occurs at the completion of layer 2 block display.

Notes 1: An OSD1 interrupt does not occur at the end of display when the block is not displayed. In other words, if a block is set to off display by the display control bit of the block control register i (addresses 0210_{16} to $021F_{16}$), an OSD1 interrupt request does not occur (refer to Figure 2.16.41 (A)).

2: When another block display appears while one block is displayed, an OSD1 interrupt request occurs only once at the end of the another block display (refer to Figure 2.16.40 (B)).

3: On the screen setting window, an OSD1 interrupt occurs even at the end of the CC mode block (off display) out of window (refer to Figure 2.16.40 (C)).

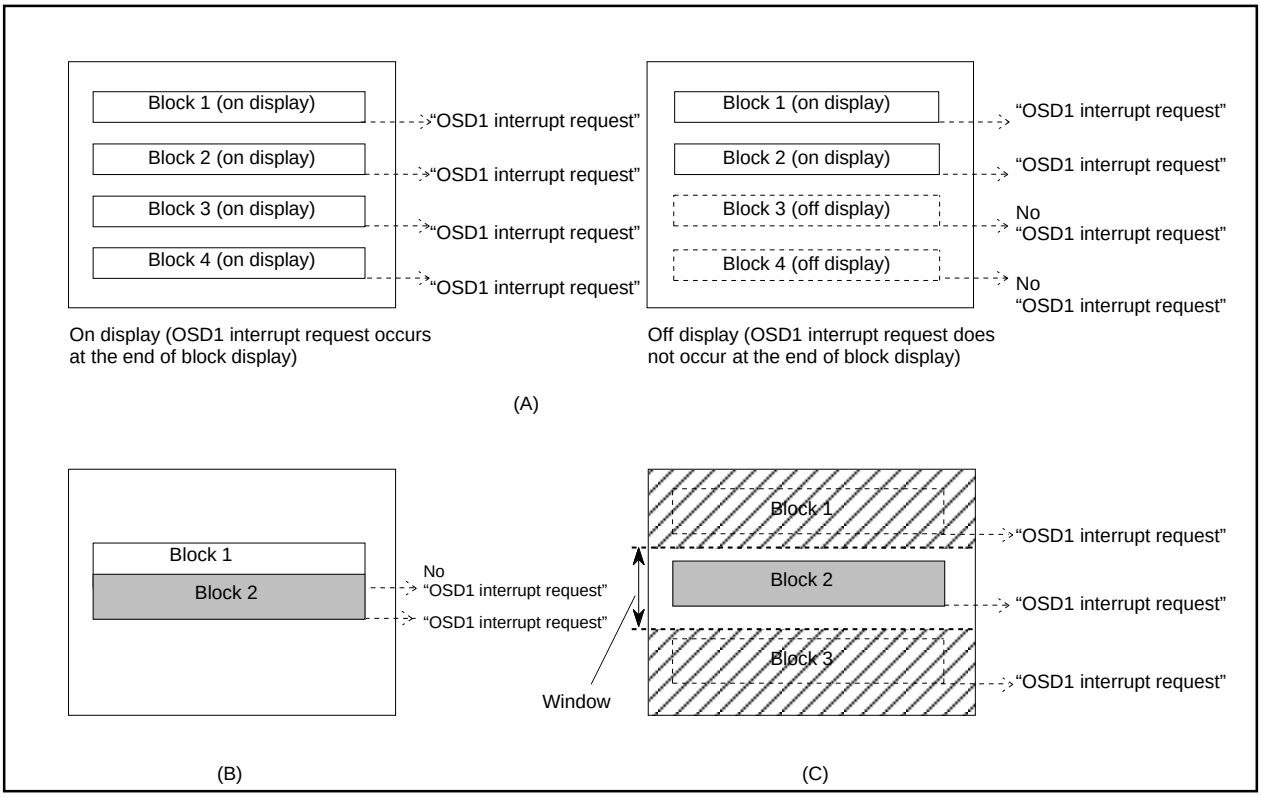

Figure 2.16.40 Note on occurrence of OSD1 interrupt

2.16.14 SPRITE OSD Function

This is especially suitable for cursor and other displays as its function allows for display in any position, regardless of the validity of block OSD displays or display positions. SPRITE font consists of 2 characters: SPRITE fonts 1 and 2. Each SPRITE font is a RAM font consisting of 32 horizontal dots × 20 vertical dots, 4 planes, and 4 bits of data per dot. Each plane has corresponding color palette selection bit, and 16 kinds of color palettes can be selected by the plane bit combination (three bits) for each dot. The color palette is set in dot units according to the OSD RAM (SPRITE) contents from among the selection range. It is possible to add arbitrary font data by software as the SPRITE fonts consist of RAM font.

The SPRITE OSD control register can control SPRITE display and dot size. The display position can also be set independently of the block display by the SPRITE horizontal position registers and the sprite horizontal vertical position registers. The vertical fonts 1 and 2 can be set independently. OSD2 interrupt request occurs at each completion of font display. The horizontal position is set in 2048 steps in 2TOSC units, and the vertical position is set in 1024 steps in 1TH units.

When SPRITE display overlaps with other OSD displays, SPRITE display is always given priority. However, the SPRITE display overlaps with the display which includes OUT2 output, OUT2 in the OSD is output without masking.

Notes 1: The SPRITE OSD function cannot output OUT2.

2: When using SPRITE OSD, do not set HS ≤ “003$_{16}$”, HS ≥ “800$_{16}$.”

3: When using SPRITE OSD, do not set VSi = “000$_{16}$,” VSi ≥ “400$_{16}$.”

4: When displaying with SPRITE fonts 1 and 2 overlapped, the SPRITE font with a larger set value as the vertical display start position is displayed. When the set values of the vertical display start position are the same, the SPRITE font 1 is displayed.

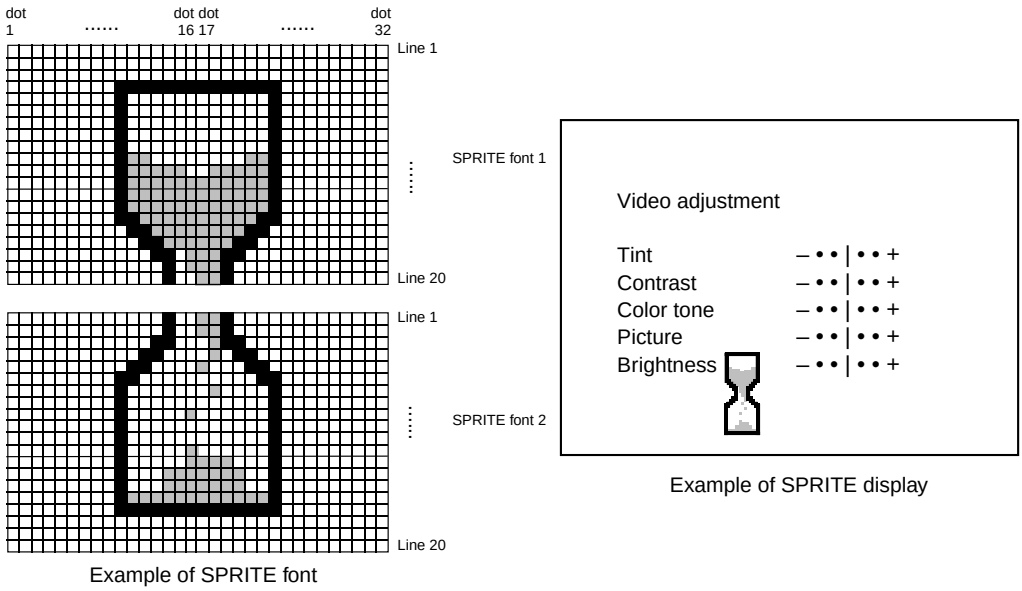

Figure 2.16.41 SPRITE OSD display example

SPRITE OSD control register

b7	b6	b5	b4	b3	b2	b1	b0
X	X	X					

Symbol	Address	When reset
SC	020_{16}	$XXX00000_2$

Bit symbol	Bit name	Function	R	W
SC0	SPRITE font 1 control bit	0: Do not display 1: Display	○	○
SC1	Pre-divide ratio selection bit	0: Pre-divide ratio 1 1: Pre-divide ratio 2	○	○
SC2	Dot size selection bits	b3 b2 0 0: 1Tc × 1/2H 0 1: 1Tc × 1H 1 0: 2Tc × 1H 1 1: 2Tc × 2H	○	○
SC3			○	○
SC4	SPRITE font 2 control bit	0: Do not display 1: Display	○	○
Nothing is assigned. In an attempt to write to these bits, write “0.” The value, if read, turns out to be “0.”			—	—

Notes 1: Tc is OSD clock cycle divided in pre-divide circuit.
2: H is HSYNC

Figure 2.16.42 SPRITE OSD control register

SPRITE horizontal position register

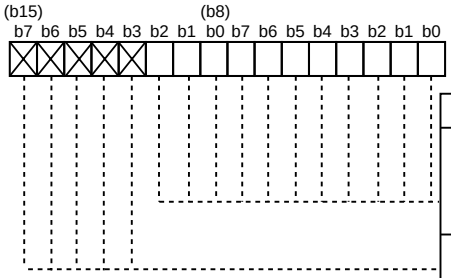

Symbol	Address	When reset
HS	0279_{16}, 0278_{16}	Indeterminate

Bit symbol	Bit name	Function	R	W
HS10 to HS0	Horizontal display start position control bits of SPRITE font	Horizontal display start position = 2TOSC × n (n: setting value, TOSC: OSD oscillation cycle)	○	○
Nothing is assined. In an attempt to write to this bit, write "0." The value, if read, turns out to be indeterminate.			—	—

Note : Do not set HS ≤ "003_{16}," HS ≥ "800_{16}."

Figure 2.16.43 SPRITE horizontal position register

SPRITE vertical position register i

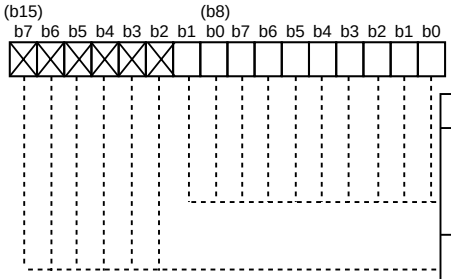

Symbol	Address	When reset
VS1	0275_{16}, 0274_{16}	Indeterminate
VS2	0277_{16}, 0276_{16}	Indeterminate

Bit symbol	Bit name	Function	R	W
VSi9 to VSi0	Vertical display start position control bits of SPRITE font i (i = 1, 2)	Vertical display start position = TH × n (n: setting value, TH: HSYNC cycle)	○	○
Nothing is assined. In an attempt to write to this bit, write "0." The value, if read, turns out to be indeterminate.			—	—

Note : Do not set VSi = "000_{16}," VSi ≥ "400_{16}" (i = 1, 2).

Figure 2.16.44 SPRITE vertical position register i (i = 1, 2)

2.16.15 Window Function

The window function can be set windows on-screen and output OSD within only the area where the window is set.

The ON/OFF for vertical window function is performed by bit 5 of the OSD control register 1 and is used to select vertical window function or vertical blank function by bit 6 of the OSD control register 2. Accordingly, the vertical window function cannot be used simultaneously with the vertical blank function. The display mode to validate the window function is selected by bits 5 to 7 of the OSD control register 3. The top border is set by the top border control register (TBR) and the bottom border is set by the bottom border control register (BBR).

The ON/OFF for horizontal window function is performed by bit 4 of the OSD control register 2 and is used interchangeably for the horizontal blank function with bit 5 of the OSD control register 2. Accordingly, the horizontal blank function cannot be used simultaneously with the horizontal window function. The display mode to validate the window function is selected by bits 5 to 7 of the OSD control register 3. The left border is set by the left border control register (LBR), and the right border is set by the right border control register (RBR).

Notes 1: Horizontal blank and horizontal window, as well as vertical blank and vertical window can not be used simultaneously.

2: When the window function is ON by OSD control registers 1 and 2, the window function of OUT2 is valid in all display mode regardless of setting value of the OSD control register 3 (bits 5 to 7). For example, even when make the window function valid in only CC mode, the function of OUT2 is valid in OSDS/L/P and CDOSD modes.

3: As for SPRITE display, the window function does not operate.

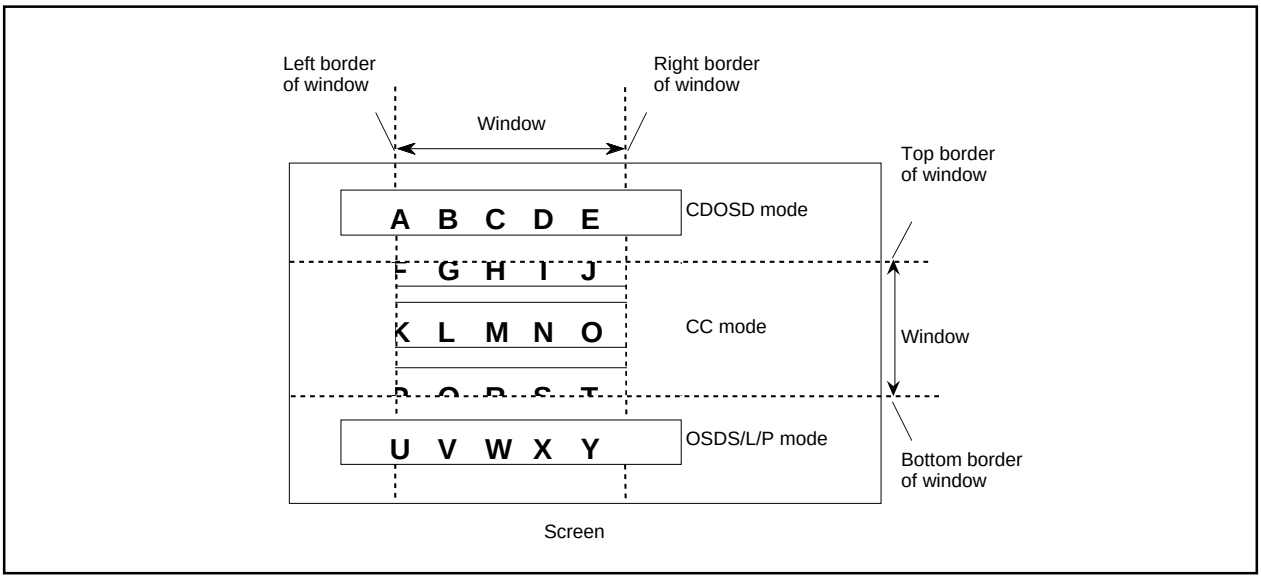

Figure 2.16.45 Example of window function (When CC mode is valid)

2.16.16 Blank Function

The blank function can output blank (OUT1) area on all sides (vertical and horizontal) of the screen. This provides the blank signal, wipe function, etc., when outputting a 3 : 4 image on a wide screen.

The ON/OFF for vertical blank function is performed by bit 5 of the OSD control register 1 and is used to select vertical window function or vertical blank function by bit 6 of the OSD control register 2. Accordingly, the vertical blank function cannot be used simultaneously with the vertical window function. The top border is set by the top border control register (TBR), and the bottom border is set by the bottom border control register (BBR), in 1H units.

The ON/OFF for horizontal blank function is performed by bit 4 of the OSD control register 2 and is used interchangeably for the horizontal window function with bit 5 of the OSD control register 2 . Accordingly, the horizontal blank function cannot be used simultaneously with the horizontal window function. The left border is set by the left border control register (LBR) and the right border is set by the right border control register (RBR), in 4TOSC units.

The OSD output (except raster) in area with blank output is not deleted.

These blank signals are not output in the horizontal/vertical blanking interval.

Notes 1. Horizontal blank and horizontal window, as well as vertical blank and vertical window can not be used simultaneously.

2. When using the window function, be sure to set “1” to bit 0 of OSD control register 1.

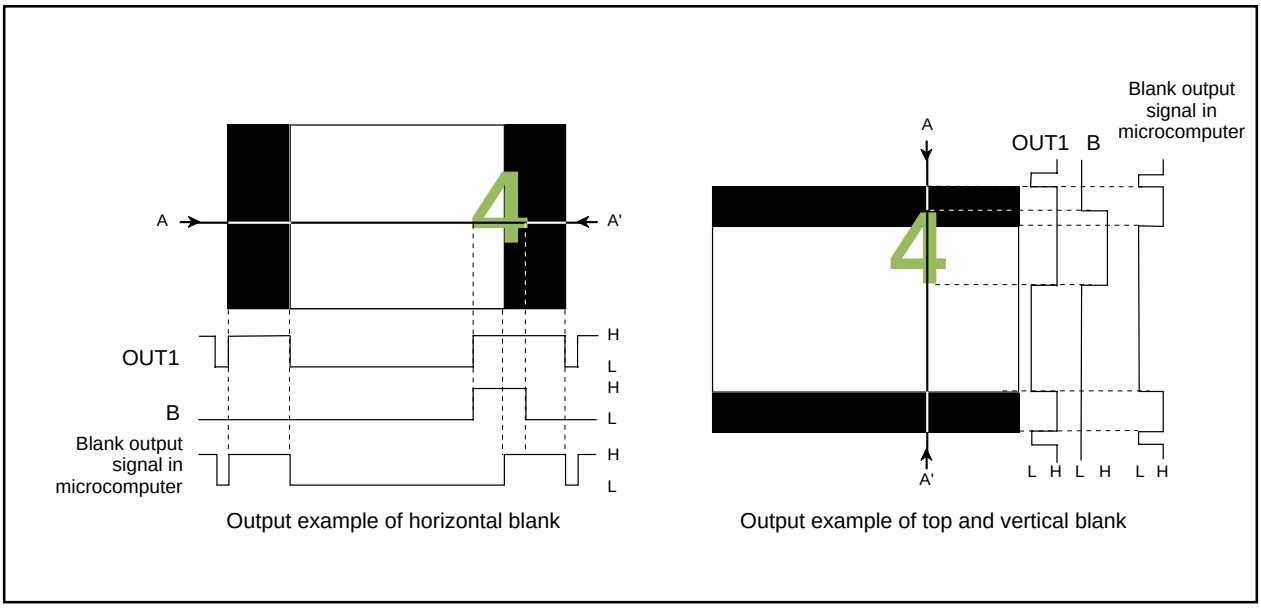

Figure 2.16.46 Blank output example (when OSD output is B + OUT1)

Top border control register

(b15) b7 b6 b5 b4 b3 b2 b1 (b8) b0 b7 b6 b5 b4 b3 b2 b1 b0

Symbol	Address	When reset
TBR	$020D_{16}$, $020C_{16}$	Indeterminate

Bit symbol	Bit name	Function	R	W
TBR_9 to TBR_0	Top border control bits	Top border position = T_H × n (n: setting value, T_H: H_{SYNC} cycle)	○	○
Nothing is assined. In an attempt to write to this bit, write "0." The value, if read, turns out to be indeterminate.			—	—

Notes 1 : Do not set TBR ≤ "001_{16}," TBR ≥ "400_{16}."
2 : Set as TBR < BBR.

Figure 2.16.47 Top border control register

Bottom border control register

(b15) b7 b6 b5 b4 b3 b2 b1 (b8) b0 b7 b6 b5 b4 b3 b2 b1 b0

Symbol	Address	When reset
BBR	$020F_{16}$, $020E_{16}$	Indeterminate

Bit symbol	Bit name	Function	R	W
BBR_9 to BBR_0	Bottom border control bits	Bottom border position = T_H × n (n: setting value, T_H: H_{SYNC} cycle)	○	○
Nothing is assined. In an attempt to write to this bit, write "0." The value, if read, turns out to be indeterminate.			—	—

Notes 1 : Do not set BBR ≥ "400_{16}."
2 : Set as TBR < BBR.

Figure 2.16.48 Bottom border control register

Left border control register

(b15) b7 b6 b5 b4 b3 b2 b1 (b8) b0 b7 b6 b5 b4 b3 b2 b1 b0

Symbol	Address	When reset
LBR	0271_{16}, 0270_{16}	$XXXXX000000000001_2$

Bit symbol	Bit name	Function	R	W
LBR_10 to LBR_0	Left border control bits	Left border position = 4Tosc × n (n: setting value, Tosc: OSD oscillation cycle)	○	○
Nothing is assined. In an attempt to write to this bit, write "0." The value, if read, turns out to be indeterminate.			—	—

Notes 1 : Do not set LBR ≤ "003_{16}," LBR ≥ "800_{16}."
2 : Set as LBR < RBR.

Figure 2.16.49 Left border control register

Right border control register

(b15) b7 b6 b5 b4 b3 b2 b1 (b8) b0 b7 b6 b5 b4 b3 b2 b1 b0

Symbol	Address	When reset
RBR	0273_{16}, 0272_{16}	$XXXXX000000000000_2$

Bit symbol	Bit name	Function	R	W
RBR_10 to RBR_0	Right border control bits	Left border position = 4Tosc × n (n: setting value, Tosc: OSD oscillation cycle)	○	○
Nothing is assined. In an attempt to write to this bit, write "0." The value, if read, turns out to be indeterminate.			—	—

Notes 1 : Do not set RBR ≥ "800_{16}."
2 : Set as LBR < RBR.

Figure 2.16.50 Right border control register

2.16.17 Raster Coloring Function

An entire screen (raster) can be colored by setting the bits 6 to 0 of the raster color register. Since each of the R, G, B, OUT1, and OUT2 pins can be switched to raster coloring output, 512 raster colors can be obtained.

When the character color/the character background color overlaps with the raster color, the color (R, G, B, OUT1, OUT2), specified for the character color/the character background color, takes priority of the raster color. This ensures that the character color/the character background color is not mixed with the raster color.

The raster color register is shown in Figure 2.16.51, the example of raster coloring is shown in Figure 2.16.52.

Note: Raster is not output to the area which includes blank area.

Raster color register

(b15) b7 b6 b5 b4 b3 b2 b1 (b8) b0 b7 b6 b5 b4 b3 b2 b1 b0

Symbol	Address	When reset
RSC	0209_{16}, 0208_{16}	0000_{16}

Bit symbol	Bit name	Function	R	W
RSC2 to RSC0	R singnal output control bits	b2 b1 b0 0 0 0 : Vss 0 0 1 : 1/7Vcc 0 1 0 : 2/7Vcc 0 1 1 : 3/7Vcc 1 0 0 : 4/7Vcc 1 0 1 : 5/7Vcc 1 1 0 : 6/7Vcc 1 1 1 : Vcc	○	○
Nothing is assined. In an attempt to write to this bit, write “0.” The value, if read, turns out to be indeterminate.			—	—
RSC6 to RSC4	G singnal output control bits	b6 b5 b4 0 0 0 : Vss 0 0 1 : 1/7Vcc 0 1 0 : 2/7Vcc 0 1 1 : 3/7Vcc 1 0 0 : 4/7Vcc 1 0 1 : 5/7Vcc 1 1 0 : 6/7Vcc 1 1 1 : Vcc	○	○
Nothing is assined. In an attempt to write to this bit, write “0.” The value, if read, turns out to be indeterminate.			—	—
RSC10 to RSC8	B singnal output control bits	b10 b9 b8 0 0 0 : Vss 0 0 1 : 1/7Vcc 0 1 0 : 2/7Vcc 0 1 1 : 3/7Vcc 1 0 0 : 4/7Vcc 1 0 1 : 5/7Vcc 1 1 0 : 6/7Vcc 1 1 1 : Vcc	○	○
Nothing is assined. In an attempt to write to this bit, write “0.” The value, if read, turns out to be indeterminate.			—	—
RSC12	OUT1 singnal output control bit	0: No output 1: Output	○	○
RSC13	OUT2 singnal output control bit	0: No output 1: Output	○	○
Nothing is assined. In an attempt to write to this bit, write “0.” The value, if read, turns out to be indeterminate.			—	—

Figure 2.16.51 Raster color register

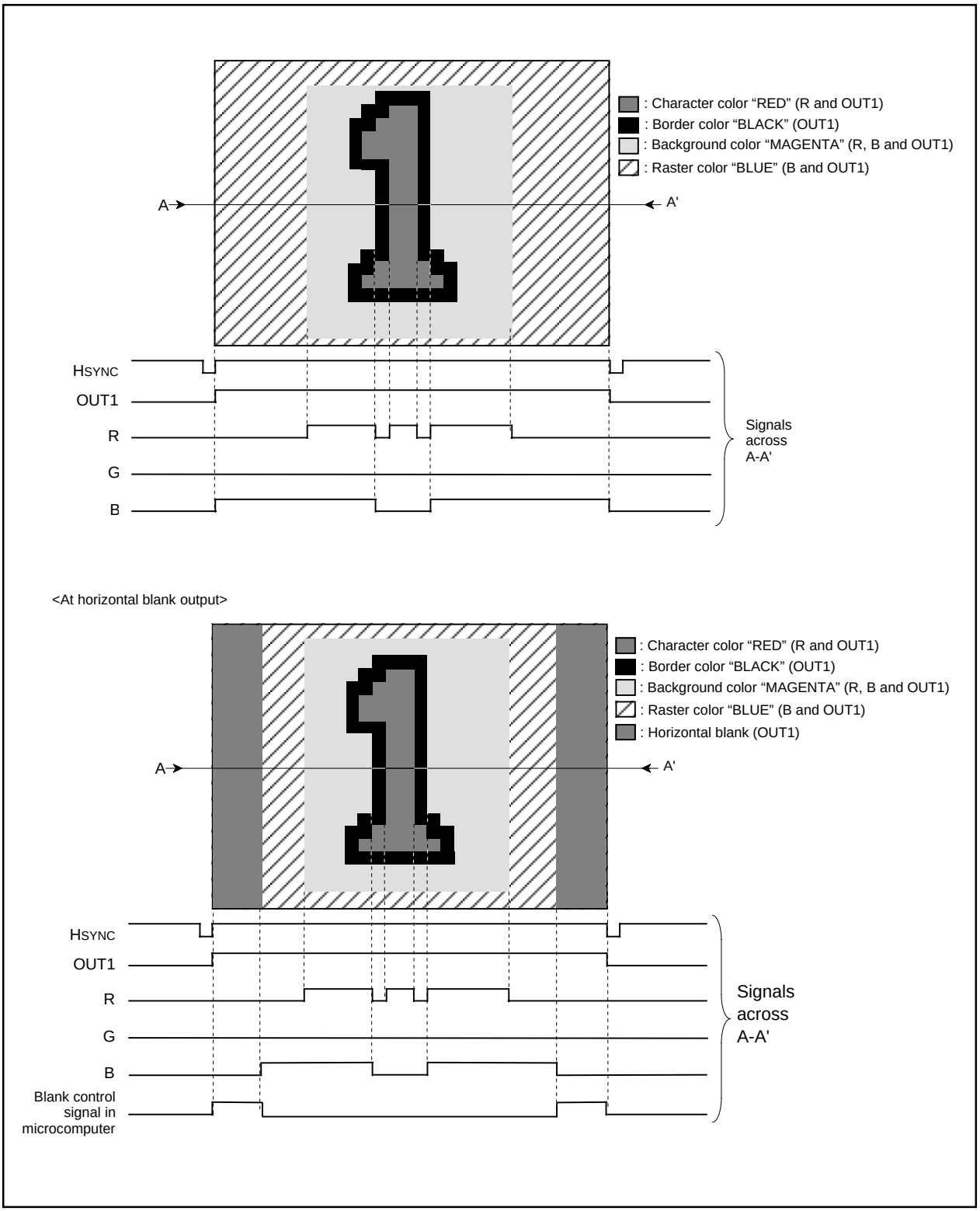

Figure 2.16.52 Example of raster coloring

2.16.18 Scan Mode

This microcomputer has the bi-scan mode for corresponding to HSYNC of double speed frequency. In the bi-scan mode, the vertical start display position and the vertical size is two times as compared with the normal scan mode. The scan mode is selected by bit 1 of the OSD control register 1 (refer to Figure 2.16.3).

Table 2.16.12 Setting for scan mode

Parameter \ Scan Mode	Normal Scan	Bi-Scan
Bit 1 of OSD control register 1	0	1
Vertical display start position	Value of vertical position register × 1H	Value of vertical position register × 2H
Vertical dot size	1Tc × 1/2H 1Tc × 1H 2Tc × 2H 3Tc × 3H	1Tc × 1H 1Tc × 2H 2Tc × 4H 3Tc × 6H

2.16.19 R, G, B Signal Output Control

The form of R, G, B signal output is controlled by bit 4 of the clock register and bit 2 of the OSD control register 2 as the table below.

Table 2.16.13 R, G, B signal output control

Bit 4 of clock control register	Bit 2 of OSD control register 2	Form of R, G, B signal output
0	0	Each R, G, B pin outputs 2 values (digital output).
	1	Each R, G, B pin outputs 8 values (analog output).
1		Each R, R' ($P7_3$), G, G' ($P6_0$), B, B' ($P5_7$) pin outputs 2 values. (Corresponding to each signal output control bits of color palette register i) R, G, B: CRi_1, CRi_5, CRi_9, respectively R', G', B': CRi_0, CRi_4, CRi_8, respectively

Note: When bit 4 of the clock control register is "1," ports $P5_7$, $P6_0$, $P7_3$ function as OSD function pins R', G', B', respectively. When emulating, however, set bit 4 to "0."

2.16.20 OSD Reserved Register

OSD reserved register i (i=1, 2)

b7	b6	b5	b4	b3	b2	b1	b0
0	0	0	0	0	0	0	0

Symbol	Address	When reset
OR1	$025D_{16}$	00_{16}
OR2	$027C_{16}$	00_{16}

Bit symbol	Bit name	Description	R	W
Reserved bits		Mest always be sed to “0”	○	○

Figure 2.16.53 OSD reserved register i (i=1, 2)

OSD reserved register 3

b7	b6	b5	b4	b3	b2	b1	b0
0	0	0	0	0	0	0	0

Symbol	Address	When reset
OR3	$027B_{16}$	$XX000000_2$

Bit symbol	Bit name	Description	R	W
Reserved bits		Mest always be set to “0”	○	○
Reserved bits		Mest always be set to “0”	×	○

Figure 2.16.54 OSD reserved register 3

OSD reserved register 4

b7	b6	b5	b4	b3	b2	b1	b0
0	0	0	0	0	0	0	0

Symbol	Address	When reset
OR4	$027A_{16}$	$XX000000_2$

Bit symbol	Bit name	Description	R	W
Reserved bits		Mest always be set to “0”	○	○
Reserved bit		Mest always be set to “0”	–	○

Figure 2.16.55 OSD reserved register 4

2.17 Programmable I/O Ports

There are 78 programmable I/O ports: P0–P5, $P6_0$–$P6_3$, $P6_7$, P7, $P8_2$, $P8_3$, $P8_6$, $P8_7$, $P9_0$–$P9_4$ and P10. Each port can be set independently for input or output using the direction register. A pull-up resistance for each block of 4 ports can be set.

Figures 2.17.1 to 2.17.4 show the programmable I/O ports.

Each pin functions as a programmable I/O port and as the I/O for the built-in peripheral devices.

To use the pins as the inputs for the built-in peripheral devices, set the direction register of each pin to input mode. When the pins are used as the outputs for the built-in peripheral devices (other than the D-A converter), they function as outputs regardless of the contents of the direction registers. When pins are to be used as the outputs for the D-A converter, do not set the direction registers to output mode. See the descriptions of the respective functions for how to set up the built-in peripheral devices.

2.17.1 Direction Registers

Figures 2.17.6 to 2.17.9 show the direction registers.

These registers are used to choose the direction of the programmable I/O ports. Each bit in these registers corresponds one for one to each I/O pin.

(1) Effect of the protection register

Data written to the direction register of P9 is affected by the protection register. The direction register of P9 cannot be easily written.

2.17.2 Port Registers

Figures 2.17.10 to 2.17.13 show the port registers.

These registers are used to write and read data for input and output to and from an external device. A port register consists of a port latch to hold output data and a circuit to read the status of a pin. Each bit in port registers corresponds one for one to each I/O pin.

(1) Reading a port register

With the direction register set to output, reading a port register takes out the content of the port register, not the content of the pin. With the direction register set to input, reading the port register takes out the content of the pin.

(2) Writing to a port register

With the direction register set to output, the level of the written values from each relevant pin is output by writing to a port register. Writing to the port register, with the direction register set to input, inputs a value to the port register, but nothing is output to the relevant pins. The output level remains floating.

2.17.3 Pull-up Control Registers

Figures 2.17.15 to 2.17.17 show the pull-up control registers.

The pull-up control register can be set to apply a pull-up resistance to each block of 4 ports. When ports are set to have a pull-up resistance, the pull-up resistance is connected only when the direction register is set for input.

However, in memory expansion mode and microprocessor mode, pull-up control register of P0 to P5 is invalid.

2.17.4 Port Control Register

Figure 2.17.14 shows the port control register.

The bit 0 of port control register is used to read port P1 as follows:

0: When port P1 is input port, port input level is read.
When port P1 is output port, the contents of port P1 register is read.

1: The contents of port P1 register is read through port P1 is input/output port.

This register is valid in the following :

- External bus width is 8 bits in microprocessor mode or memory expansion mode.
- Port P1 can be used as a port in multiplexed bus for the entire space.

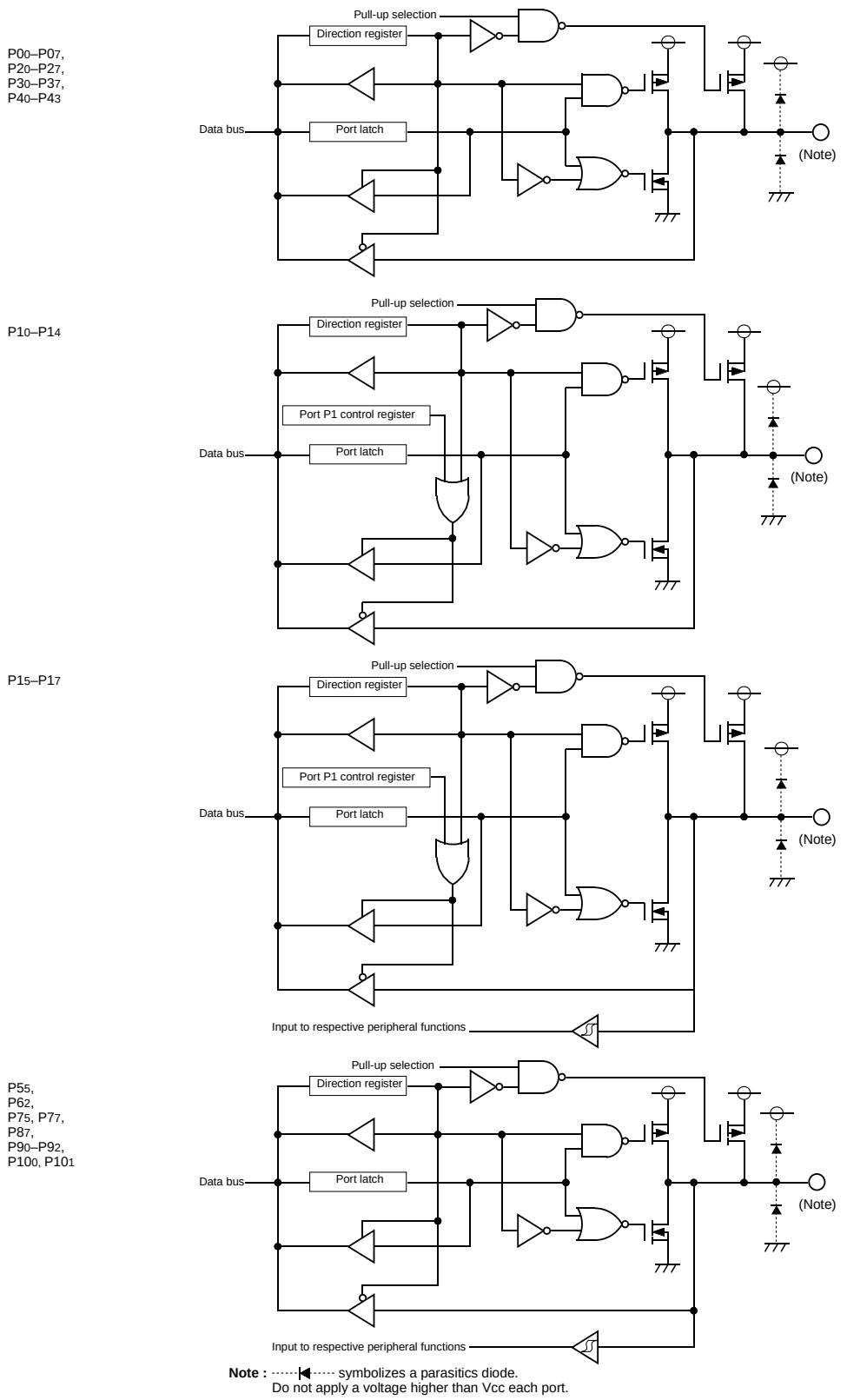

Figure 2.17.1 Programmable I/O ports (1)

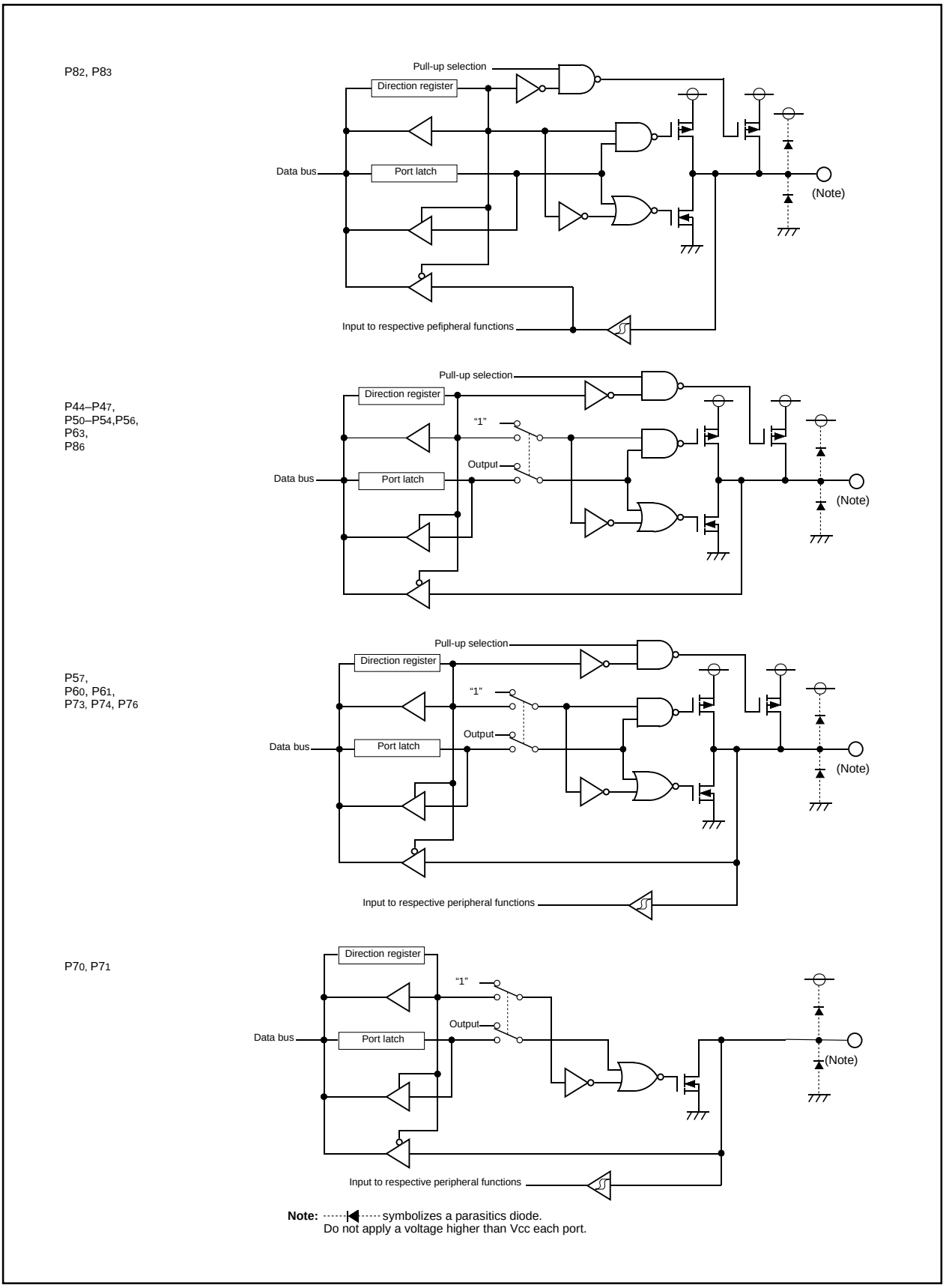

Figure 2.17.2 Programmable I/O ports (3)

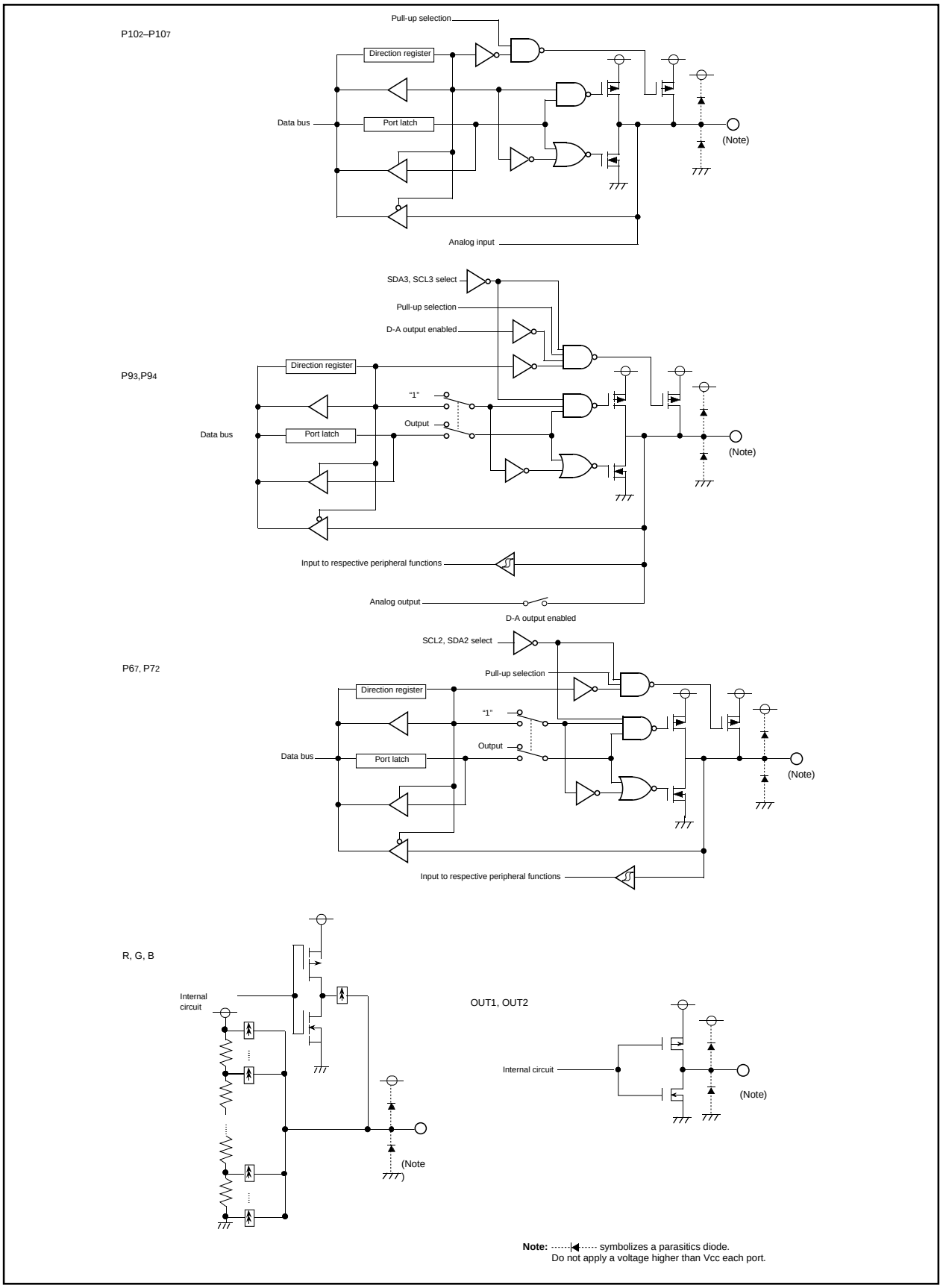

Figure 2.17.3 Programmable I/O ports (2)

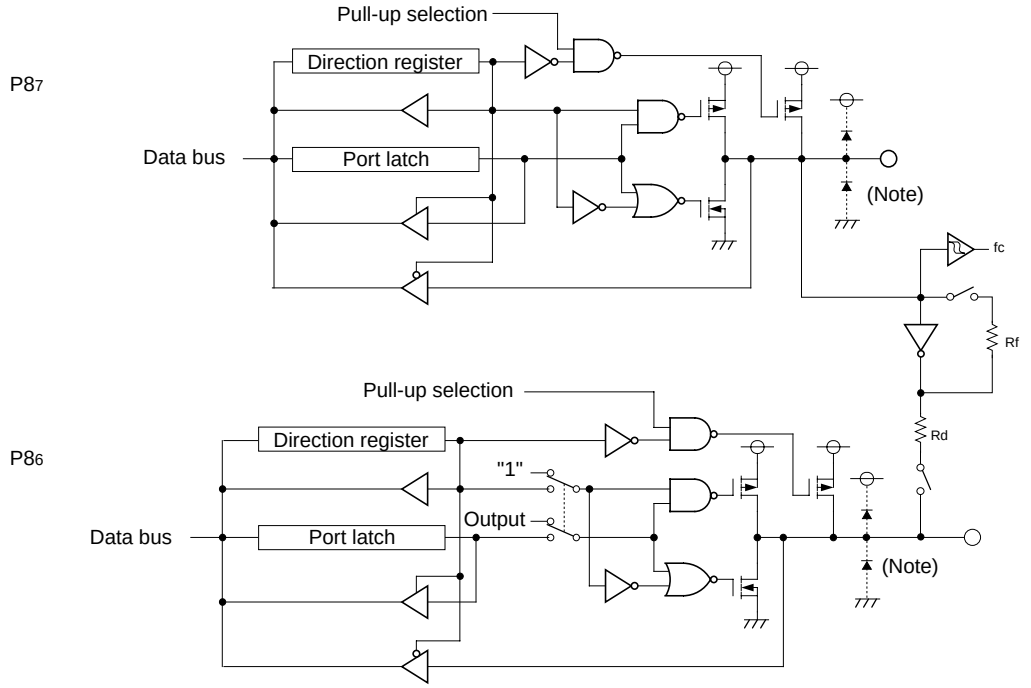

Note : symbolizes a parasitic diode.
Don't apply a voltage higher than Vcc to each port.

Figure 2.17.4 Programmable I/O ports (4)

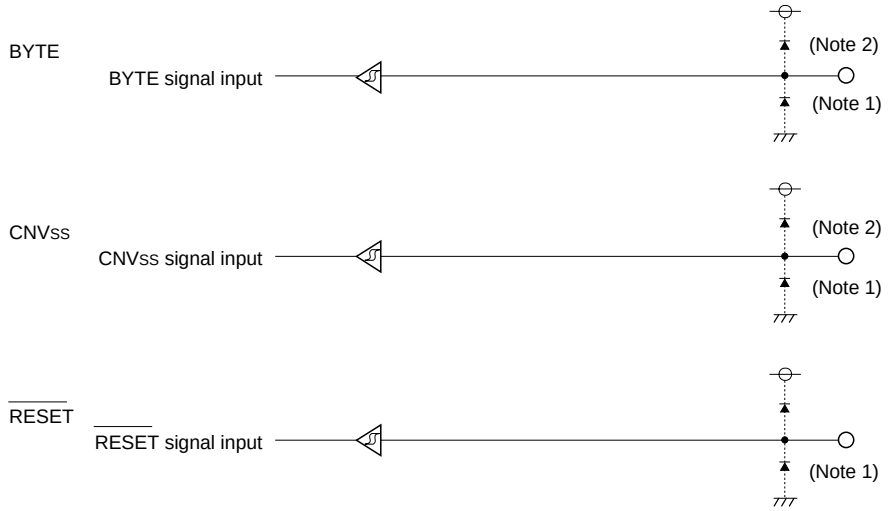

Notes1: symbolizes a parasitic diode.
Don't apply a voltage higher than Vcc to each pin.
2: A parasitic diode on the Vcc side is added to the mask ROM version.
Don't apply a voltage higher than Vcc to each pin.

Figure 2.17.5 I/O pins

Port Pi direction register (Note)

b7	b6	b5	b4	b3	b2	b1	b0

Symbol	Address	When reset
PDi (i = 0 to 10, except 6, 8, 9)	$03E2_{16}$, $03E3_{16}$, $03E6_{16}$, $03E7_{16}$, $03EA_{16}$, $03EB_{16}$, $03EF_{16}$, $03F6_{16}$	00_{16} 00_{16}

Bit symbol	Bit name	Function	R	W
PDi_0	Port Pi_0 direction register	0 : Input mode (Functions as an input port) 1 : Output mode (Functions as an output port) (i = 0 to 10 except 6, 8, 9)	○	○
PDi_1	Port Pi_1 direction register		○	○
PDi_2	Port Pi_2 direction register		○	○
PDi_3	Port Pi_3 direction register		○	○
PDi_4	Port Pi_4 direction register		○	○
PDi_5	Port Pi_5 direction register		○	○
PDi_6	Port Pi_6 direction register		○	○
PDi_7	Port Pi_7 direction register		○	○

Figure 2.17.6 Port Pi direction register (i = 0 to 10, except 6, 8, 9)

Port P6 direction register

b7	b6	b5	b4	b3	b2	b1	b0
	1	1	1				

Symbol	Address	When reset
PD6	$03EE_{16}$	00_{16}

Bit symbol	Bit name	Function	R	W
PD6_0	Port $P6_0$ direction register	0 : Input mode (Functions as an input port) 1 : Output mode (Functions as an output port)	○	○
PD6_1	Port $P6_1$ direction register		○	○
PD6_2	Port $P6_2$ direction register		○	○
PD6_3	Port $P6_3$ direction register		○	○
Reserved bits		Must always be set to “1”	○	○
PD6_7	Port $P6_7$ direction register	0 : Input mode (Functions as an input port) 1 : Output mode (Functions as an output port)	○	○

Figure 2.17.7 Port P6 direction register

Port P8 direction register

b7	b6	b5	b4	b3	b2	b1	b0
		X	1			0	0

Symbol	Address	When reset
PD8	$03F2_{16}$	$00X0000_{2}$

Bit symbol	Bit name	Function	R	W
Reserved bits		Must always be set to “0”	○	○
PD8_2	Port $P8_2$ direction register	0 : Input mode (Functions as an input port) 1 : Output mode (Functions as an output port)	○	○
PD8_3	Port $P8_3$ direction register		○	○
Reserved bit		Must always be set to “1”	○	○
Nothing is assigned. In an attempt to write to this bit, write “0.” The value, if read, turns out to be indeterminate.			–	–
PD8_6	Port $P8_6$ direction register	0 : Input mode (Functions as an input port) 1 : Output mode (Functions as an output port)	○	○
PD8_7	Port $P8_7$ direction register		○	○

Figure 2.17.8 Port P8 direction register

Port P9 direction register

b7	b6	b5	b4	b3	b2	b1	b0
1	1	1					

Symbol	Address	When reset
PD9	$03F3_{16}$	00_{16}

Bit symbol	Bit name	Function	R	W
PD9_0	Port $P9_0$ direction register	0 : Input mode (Functions as an input port) 1 : Output mode (Functions as an output port)	○	○
PD9_1	Port $P9_1$ direction register		○	○
PD9_2	Port $P9_2$ direction register		○	○
PD9_3	Port $P9_3$ direction register		○	○
PD9_4	Port $P9_4$ direction register		○	○
Reserved bits		Must always be set to “1”	○	○

Note: Set bit 2 of protect register (address $000A_{16}$) to “1” before rewriting to the port P9 direction register.

Figure 2.17.9 Port P9 direction register

Port Pi register

b7	b6	b5	b4	b3	b2	b1	b0

Symbol	Address	When reset
Pi (i = 0 to 10, except 6, 8, 9)	$03E0_{16}$, $03E1_{16}$, $03E4_{16}$, $03E5_{16}$, $03E8_{16}$, $03E9_{16}$, $03ED_{16}$, $03F4_{16}$	Indeterminate Indeterminate

Bit symbol	Bit name	Function	R	W
Pi_0	Port Pi_0 register	Data is input and output to and from each pin by reading and writing to and from each corresponding bit 0 : "L" level data 9 : "H" level data (i = 0 to 10 except 6, 8, 9)	○	○
Pi_1	Port Pi_1 register		○	○
Pi_2	Port Pi_2 register		○	○
Pi_3	Port Pi_3 register		○	○
Pi_4	Port Pi_4 register		○	○
Pi_5	Port Pi_5 register		○	○
Pi_6	Port Pi_6 register		○	○
Pi_7	Port Pi_7 register		○	○

Note: Since $P7_0$ and $P7_1$ are N-channel open-drain ports, the data is high-impedance.

Figure 2.17.10 Port Pi register (i = 0 to 10, except 6, 8, 9)

Port P6 register

b7	b6	b5	b4	b3	b2	b1	b0
	0	0	0				

Symbol	Address	When reset
P6	$03EC_{16}$	Indeterminate

Bit symbol	Bit name	Function	R	W
P6_0	Port $P6_0$ register	Data is input and output to and from each pin by reading and writing to and from each corresponding bit 0 : "L" level data 1 : "H" level data	○	○
P6_1	Port $P6_1$ register		○	○
P6_2	Port $P6_2$ register		○	○
P6_3	Port $P6_3$ register		○	○
Reserved bits		Must always be set to "0"	×	○
P6_7	Port $P6_7$ register	Data is input and output to and from each pin by reading and writing to and from each corresponding bit 0 : "L" level data 1 : "H" level data	○	○

Figure 2.17.11 Port P6 register

Port P8 register

b7	b6	b5	b4	b3	b2	b1	b0
		0	0			0	0

Symbol	Address	When reset
P8	$03F0_{16}$	Indeterminate

Bit symbol	Bit name	Function	R	W
Reserved bits		Must always be set to “0”	×	○
P8_2	Port $P8_2$ register	Data is input and output to and from each pin by reading and writing to and from each corresponding bit 0 : “L” level data 1 : “H” level data	○	○
P8_3	Port $P8_3$ register		○	○
Reserved bits		Must always be set to “0”	×	○
P8_6	Port $P8_6$ register	Data is input and output to and from each pin by reading and writing to and from each corresponding bit 0 : “L” level data 1 : “H” level data	○	○
P8_7	Port $P8_7$ register		○	○

Figure 2.17.12 Port P8 register

Port P9 register

b7	b6	b5	b4	b3	b2	b1	b0
0	0	0					

Symbol	Address	When reset
P9	$03F1_{16}$	Indeterminate

Bit symbol	Bit name	Function	R	W
P9_0	Port $P9_0$ register	Data is input and output to and from each pin by reading and writing to and from each corresponding bit 0 : “L” level data 1 : “H” level data	○	○
P9_1	Port $P9_1$ register		○	○
P9_2	Port $P9_2$ register		○	○
P9_3	Port $P9_3$ register		○	○
P9_4	Port $P9_4$ register		○	○
Reserved bits		Must always be set to “0”	×	○

Figure 2.17.13 Port P9 register 0

Port control register

b7	b6	b5	b4	b3	b2	b1	b0
X	X	X	X	X	X	X	

Symbpl	Address	When reset
PCR	$03FF_{16}$	00_{16}

Bit symbol	Bit name	Function	R	W
PCR0	Port P1 control register	0: When port P1 is input port, port input level is read. When port P1 is output port, the contents of port P1 register is read. 1: The contents of port P1 register is read through port P1 is input/output port.	○	○
Nothing is assigned. In an attempt to write to this bit, write “0.” The value, if read, turns out to be “0.”			—	—

Figure 2.17.14 Port control register

Pull-up control register 0

b7	b6	b5	b4	b3	b2	b1	b0

Symbol	Address	When reset
PUR0	$03FC_{16}$	00_{16}

Bit symbol	Bit name	Function	R	W
PU00	$P0_0$ to $P0_3$ pull-up	The corresponding port is pulled high with a pull-up resistor 0 : Not pulled high 1 : Pulled high	○	○
PU01	$P0_4$ to $P0_7$ pull-up		○	○
PU02	$P1_0$ to $P1_3$ pull-up		○	○
PU03	$P1_4$ to $P1_7$ pull-up		○	○
PU04	$P2_0$ to $P2_3$ pull-up		○	○
PU05	$P2_4$ to $P2_7$ pull-up		○	○
PU06	$P3_0$ to $P3_3$ pull-up		○	○
PU07	$P3_4$ to $P3_7$ pull-up		○	○

Figure 2.17.15 Pull-up control register 0

Pull-up control register 1

b7	b6	b5	b4	b3	b2	b1	b0

Symbol	Address	When reset
PUR1	$03FD_{16}$	00_{16} (Note 3)

Bit symbol	Bit name	Function	R	W
PU10	$P4_0$ to $P4_3$ pull-up	The corresponding port is pulled high with a pull-up resistor 0 : Not pulled high 1 : Pulled high	○	○
PU11	$P4_4$ to $P4_7$ pull-up		○	○
PU12	$P5_0$ to $P5_3$ pull-up		○	○
PU13	$P5_4$ to $P5_7$ pull-up		○	○
PU14	$P6_0$ to $P6_3$ pull-up		○	○
PU15	$P6_7$ pull-up(Note 2)		○	○
PU16	$P7_2$ and $P7_3$ pull-up (Note 1)		○	○
PU17	$P7_4$ to $P7_7$ pull-up		○	○

Notes 1: Since $P7_0$ and $P7_1$ are N-channel open drain ports, pull-up is not available for them.
2: Pull-up is not available for $P6_7$ and $P7_2$, when they are used as I^2C bus interface ports.
3: When the V_{CC} level is being impressed to the CNV_{SS} terminal, the reset value of this register becomes to 02_{16} (PU11 becomes to "1").

Figure 2.17.16 Pull-up control register 1

Pull-up control register 2

b7	b6	b5	b4	b3	b2	b1	b0
╳	╳						

Symbol	Address	When reset
PUR2	$03FE_{16}$	00_{16}

Bit symbol	Bit name	Function	R	W
PU20	$P8_2$ and $P8_3$ pull-up	The corresponding port is pulled high with a pull-up resistor 0 : Not pulled high 1 : Pulled high	○	○
PU21	$P8_6$ and $P8_7$ pull-up		○	○
PU22	$P9_0$ to $P9_3$ pull-up		○	○
PU23	$P9_4$ pull-up		○	○
PU24	$P10_0$ to $P10_3$ pull-up	The corresponding port is pulled high with a pull-up resistor 0 : Not pulled high 1 : Pulled high	○	○
PU25	$P10_4$ to $P10_7$ pull-up		○	○
Nothing is assigned. In an attempt to write to these bits, write "0." The value, if read, turns out to be "0."			—	—
			—	—

Figure 2.17.17 Pull-up control register 2

Table 2.17.1 Example connection of unused pins in single-chip mode

Pin name	Connection
Ports P0 to P10	After setting for input mode, connect every pin to VSS or VCC via a resistor; or after setting for output mode, leave these pins open.
XOUT (Note)	Open
AVCC	Connect to VCC
BYTE	Connect to VSS
CNVSS	Connect via resistor to VSS (pull-down)

Note: With external clock input to XIN pin.

Table 2.17.2 Example connection of unused pins in memory expansion mode and microprocessor mode

Pin name	Connection
Ports P6 to P10	After setting for input mode, connect every pin to VSS or VCC via a resistor; or after setting for output mode, leave these pins open.
P45/$\overline{CS1}$ to P47/$\overline{CS3}$	Sets ports to input mode, sets bits $\overline{CS1}$ through $\overline{CS3}$ to "0," and connects to Vcc via resistors (pull-up).
$\overline{BHE}$, ALE, $\overline{HLDA}$, XOUT(Note), BCLK	Open
$\overline{HOLD}$, $\overline{RDY}$	Connect via resistor to VCC (pull-up)
AVCC	Connect to VCC
CNVSS	Connect via resistor to VSS (pull-down) in the memory expansion mode. Connect via resistor to VCC (pull-up) in the microprocessor mode.

Note: With external clock input to XIN pin.

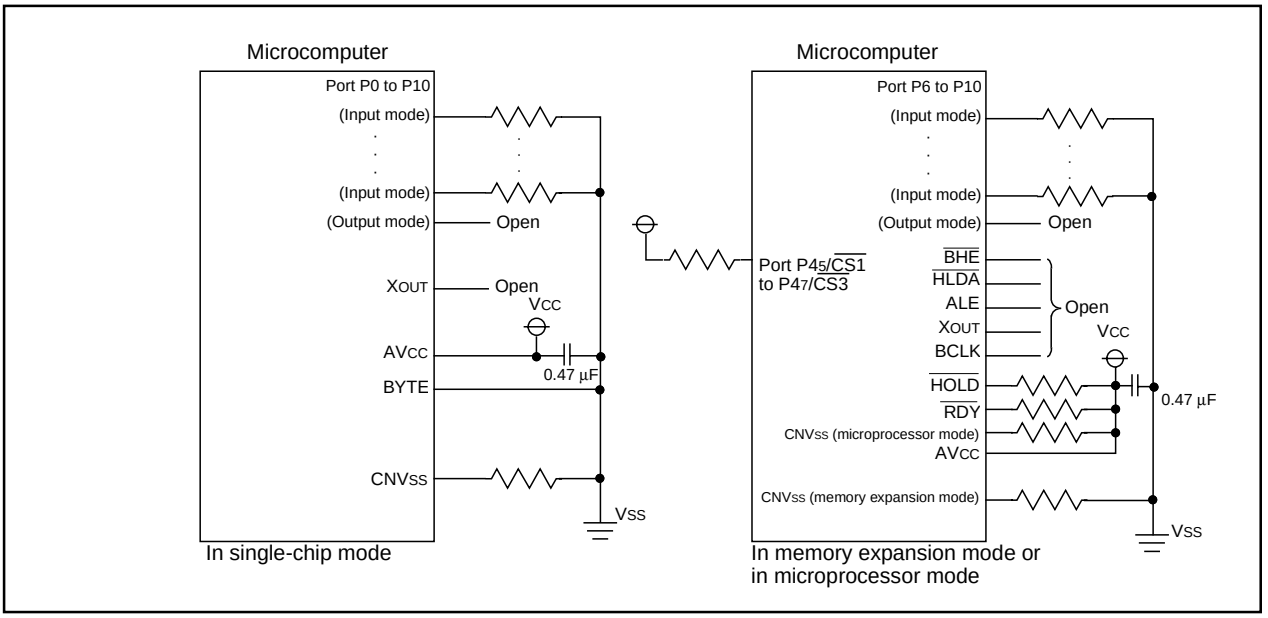

Figure 2.17.18 Example connection of unused pins

3. USAGE PRECAUTION

3.1 Timer A (timer mode)

(1) Reading the timer Ai register while a count is in progress allows reading, with arbitrary timing, the value of the counter. Reading the timer Ai register with the reload timing gets "$FFFF_{16}$". Reading the timer Ai register after setting a value in the timer Ai register with a count halted but before the counter starts counting gets a proper value.

3.2 Timer A (event counter mode)

(1) Reading the timer Ai register while a count is in progress allows reading, with arbitrary timing, the value of the counter. Reading the timer Ai register with the reload timing gets "$FFFF_{16}$" by under-flow or "0000_{16}" by overflow. Reading the timer Ai register after setting a value in the timer Ai register with a count halted but before the counter starts counting gets a proper value.

(2) When stop counting in free run type, set timer again.

3.3 Timer A (one-shot timer mode)

(1) Setting the count start flag to "0" while a count is in progress causes as follows:
- The counter stops counting and a content of reload register is reloaded.
- The TA_{iOUT} pin outputs "L" level.
- The interrupt request generated and the timer Ai interrupt request bit goes to "1".

(2) The timer Ai interrupt request bit goes to "1" if the timer's operation mode is set using any of the following procedures:
- Selecting one-shot timer mode after reset.
- Changing operation mode from timer mode to one-shot timer mode.
- Changing operation mode from event counter mode to one-shot timer mode.

Therefore, to use timer Ai interrupt (interrupt request bit), set timer Ai interrupt request bit to "0" after the above listed changes have been made.

3.4 Timer A (pulse width modulation mode)

(1) The timer Ai interrupt request bit becomes "1" if setting operation mode of the timer in compliance with any of the following procedures:
- Selecting PWM mode after reset.
- Changing operation mode from timer mode to PWM mode.
- Changing operation mode from event counter mode to PWM mode.

Therefore, to use timer Ai interrupt (interrupt request bit), set timer Ai interrupt request bit to "0" after the above listed changes have been made.

(2) Setting the count start flag to "0" while PWM pulses are being output causes the counter to stop counting. If the TA_{iOUT} pin is outputting an "H" level in this instance, the output level goes to "L", and the timer Ai interrupt request bit goes to "1". If the TAiOUT pin is outputting an "L" level in this instance, the level does not change, and the timer Ai interrupt request bit does not becomes "1".

3.5 Timer B (timer mode, event counter mode)

(1) Reading the timer Bi register while a count is in progress allows reading , with arbitrary timing, the value of the counter. Reading the timer Bi register with the reload timing gets “$FFFF_{16}$”. Reading the timer Bi register after setting a value in the timer Bi register with a count halted but before the counter starts counting gets a proper value.

3.6 Timer B (pulse period, pulse width measurement mode)

(1) If changing the measurement mode select bit is set after a count is started, the timer Bi interrupt request bit goes to “1”.

(2) When the first effective edge is input after a count is started, an indeterminate value is transferred to the reload register. At this time, timer Bi interrupt request is not generated.

3.7 A-D Converter

(1) Write to each bit (except bit 6) of A-D control register 0, to each bit of A-D control register 1, and to bit 0 of A-D control register 2 when A-D conversion is stopped (before a trigger occurs).
In particular, when the Vref connection bit is changed from “0” to “1”, start A-D conversion after an elapse of 1 µs or longer.

(2) When changing A-D operation mode, select analog input pin again.

(3) When using A-D converter in the one-shot mode and in the single sweep mode
After confirming the completion of A-D conversion, read the A-D register (the completion of A-D conversion is determined by A-D interrupt request bit).

(4) When using A-D converter in the repeat mode and in the repeat sweep mode
Use the main clock without dividing as the internal clock of CPU.

(5) The A-D conversion in the sweep mode needs the time as follows; (number of sweep pins + 2 pins) × repeat times × A-D conversion time for 1 pin.

(6) When operating OSD or operating data slicer using the H_{SYNC} and V_{SYNC} input, do not use the A-D sweap mode (single sweap mode, repeat sweap mode 0, and repeat sweap mode 1).

3.8 Stop Mode and Wait Mode

(1) When returning from stop mode by hardware reset, $\overline{RESET}$ pin must be set to “L” level until main clock oscillation is stabilized.

(2) When switching to either wait mode or stop mode, instructions occupying four bytes either from the WAIT instruction or from the instruction that sets the every-clock stop bit to “1“ within the instruction queue are perfected and then the program stops. So put at least four NOPs in succession either to the WAIT instruction or to the instruction that sets the every-clock stop bit to “1.”

3.9 Interrupts

(1) Reading address 00000_{16}

- When maskable interrupt is occurred, CPU read the interrupt information (the interrupt number and interrupt request level) in the interrupt sequence.
  The interrupt request bit of the certain interrupt written in address 00000_{16} will then be set to "0".
  Reading address 00000_{16} by software sets enabled highest priority interrupt source request bit to "0".
  Though the interrupt is generated, the interrupt routine may not be executed.
  Do not read address 00000_{16} by software.

(2) Setting the stack pointer

- The value of the stack pointer immediately after reset is initialized to 0000_{16}. Accepting an interrupt before setting a value in the stack pointer may become a factor of runaway. Be sure to set a value in the stack pointer before accepting an interrupt.

(3) External interrupt

- When the polarity of the $\overline{INT_0}$ and $\overline{INT_1}$ pins is changed, the interrupt request bit is sometimes set to "1." After changing the polarity, set the interrupt request bit to "0."

(4) Rewrite the interrupt control register

- To rewrite the interrupt control register, do so at a point that does not generate the interrupt request for that register. If there is possibility of the interrupt request occur, rewrite the interrupt control register after the interrupt is disabled. The program examples are described as follow:

Example 1:

```
INT_SWITCH1:
    FCLR    I              ; Disable interrupts.
    AND.B   #00h, 0055h    ; Clear TA0IC int. priority level and int. request bit.
    NOP                    ; Four NOP instructions are required when using HOLD function.
    NOP
    FSET    I              ; Enable interrupts.
```

Example 2:

```
INT_SWITCH2:
    FCLR    I              ; Disable interrupts.
    AND.B   #00h, 0055h    ; Clear TA0IC int. priority level and int. request bit.
    MOV.W   MEM, R0        ; Dummy read.
    FSET    I              ; Enable interrupts.
```

Example 3:

```
INT_SWITCH3:
    PUSHC   FLG            ; Push Flag register onto stack
    FCLR    I              ; Disable interrupts.
    AND.B   #00h, 0055h    ; Clear TA0IC int. priority level and int. request bit.
    POPC    FLG            ; Enable interrupts.
```

The reason why two NOP instructions (four when using the HOLD function) or dummy read are inserted before FSET I in Examples 1 and 2 is to prevent the interrupt enable flag I from being set before the interrupt control register is rewritten due to effects of the instruction queue.

- When a instruction to rewrite the interrupt control register is executed but the interrupt is disabled, the interrupt request bit is not set sometimes even if the interrupt request for that register has been generated. This will depend on the instruction. If this creates problems, use the below instructions to change the register.
  Instructions : AND, OR, BCLR, BSET

3.10 Built-in PROM Version

3.10.1 All Built-in PROM Versions

High voltage is required to program to the built-in PROM. Be careful not to apply excessive voltage. Be especially careful during power-on.

3.10.2 One Time PROM Version

One Time PROM versions shipped in blank, of which built-in PROMs are programmed by users, are also provided. For these microcomputers, a programming test and screening are not performed in the assembly process and the following processes. To improve their reliability after programming, we recommend to program and test as flow shown in Figure 3.10.1 before use.

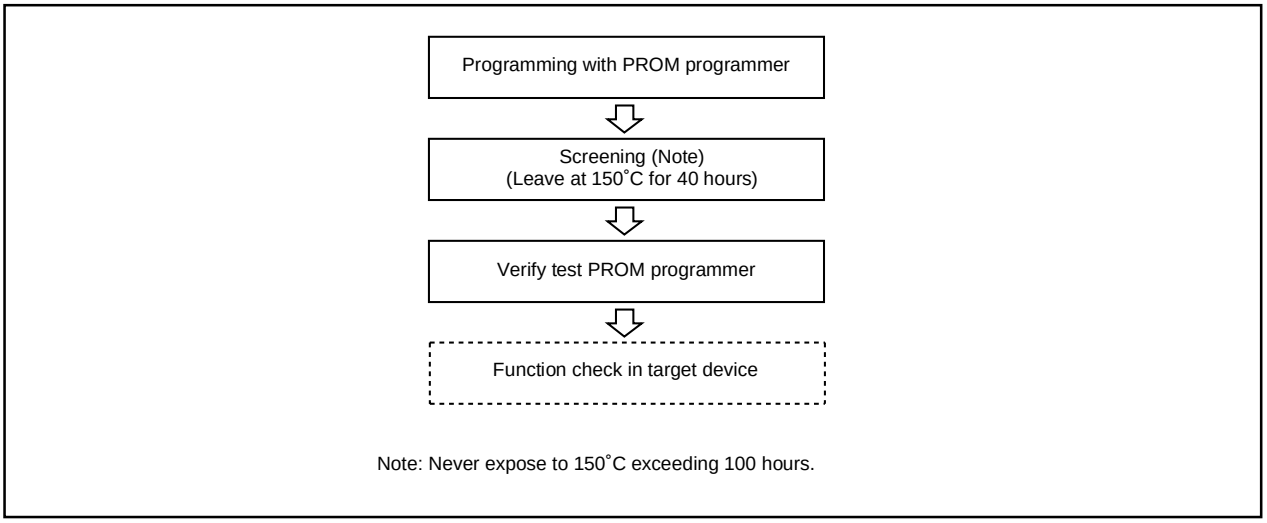

Figure 3.10.1 Programming and test flow for One Time PROM version

4. ITEMS TO BE SUBMITTED WHEN ORDERING MASKED ROM VERSION

Please submit the following when ordering masked ROM products.

(1) Mask ROM confirmation form

(2) Mark specification sheet

(3) ROM data : EPROMs (3 sets)

*: In the case of EPROMs, there sets of EPROMs are required per pattern.

*: In the case of floppy disks, 3.5-inch double-sided high-density disk (IBM format) is required per pattern.

5. ELECTRICAL CHARACTERISTICS

5.1. Absolute Maximum Ratings

Table 5.1.1 Absolute maximum ratings

Symbol	Parameter		Condition	Rated value	Unit
Vcc	Supply voltage			–0.3 to 6.0	V
AVcc	Analog supply voltage			–0.3 to 6.0	V
V_I	Input voltage	$P0_0$ to $P0_7$, $P1_0$ to $P1_7$, $P2_0$ to $P2_7$, $P3_0$ to $P3_7$, $P4_0$ to $P4_7$, $P5_0$ to $P5_7$, $P6_0$ to $P6_3$, $P6_7$, $P7_0$ to $P7_7$, $P8_2$, $P8_3$, $P8_6$, $P8_7$, $P9_0$ to $P9_4$, $P10_0$ to $P10_7$, X_{IN}, OSC1, $\overline{RESET}$		–0.3 to Vcc+0.3	V
V_I	Input voltage	CNVss, BYTE		–0.3 to 6.0 (Note)	V
V_O	Output voltage	$P0_0$ to $P0_7$, $P1_0$ to $P1_7$, $P2_0$ to $P2_7$, $P3_0$ to $P3_7$, $P4_0$ to $P4_7$, $P5_0$ to $P5_7$, $P6_0$ to $P6_3$, $P6_7$, $P7_0$ to $P7_7$, $P8_2$, $P8_3$, $P8_6$, $P8_7$, $P9_0$ to $P9_4$, $P10_0$ to $P10_7$, R, G, B, OUT1, OUT2, OSC2, X_{OUT}		–0.3 to Vcc+0.3	V
P_d	Power dissipation		Ta=25 °C	500	mW
T_{opr}	Operating ambient temperature			–10 to 70	°C
T_{stg}	Storage temperature			–40 to 125	°C

Note: When writing to EPROM, only CNV_{SS} is –0.3 to 13(V).

5.2 Recommended Operating Conditions

Table 5.2.1 Recommended operating conditions (referenced to Vcc = 4.5 V to 5.5 V at Ta = – 10 °C to 70 °C unless otherwise specified)

Symbol	Parameter		Standard Min	Standard Typ.	Standard Max.	Unit
Vcc	Supply voltage (Note 3)		4.5	5.0	5.5	V
AVcc	Analog supply voltage (Note 3)			Vcc		V
Vss	Supply voltage			0		V
V_{IH}	HIGH input voltage	$P3_1$ to $P3_7$, $P4_0$ to $P4_7$, $P5_0$ to $P5_7$, $P6_0$ to $P6_3$, $P6_7$, $P7_0$ to $P7_7$, $P8_2$, $P8_3$, $P8_6$, $P8_7$, $P9_0$ to $P9_4$, $P10_0$ to $P10_7$, HLF, V_{HOLD}, CV_{IN}, TVSETB, X_{IN}, OSC1, $\overline{RESET}$, CNV_{SS}, BYTE	0.8Vcc		Vcc	V
V_{IH}	HIGH input voltage	$P0_0$ to $P0_7$, $P1_0$ to $P1_7$, $P2_0$ to $P2_7$, $P3_0$ (during single-chip mode)	0.8Vcc		Vcc	V
V_{IH}	HIGH input voltage	$P0_0$ to $P0_7$, $P1_0$ to $P1_7$, $P2_0$ to $P2_7$, $P3_0$ (data input function during memory expansion and microprocessor modes)	0.5Vcc		Vcc	V
V_{IL}	LOW input voltage	$P3_1$ to $P3_7$, $P4_0$ to $P4_7$, $P5_0$ to $P5_7$, $P6_0$ to $P6_3$, $P6_7$, $P7_0$ to $P7_7$, $P8_2$, $P8_3$, $P8_6$, $P8_7$, $P9_0$ to $P9_4$, $P10_0$ to $P10_7$, X_{IN}, OSC1, $\overline{RESET}$, CNV_{SS}, BYTE	0		0.2Vcc	V
V_{IL}	LOW input voltage	$P0_0$ to $P0_7$, $P1_0$ to $P1_7$, $P2_0$ to $P2_7$, $P3_0$ (during single-chip mode)	0		0.2Vcc	V
V_{IL}	LOW input voltage	$P0_0$ to $P0_7$, $P1_0$ to $P1_7$, $P2_0$ to $P2_7$, $P3_0$ (data input function during memory expansion and microprocessor modes)	0		0.16Vcc	V
$I_{OH\ (peak)}$	HIGH peak output current	$P0_0$ to $P0_7$, $P1_0$ to $P1_7$, $P2_0$ to $P2_7$, $P3_0$ to $P3_7$, $P4_0$ to $P4_7$, $P5_0$ to $P5_7$, $P6_0$ to $P6_3$, $P7_2$ to $P7_7$, $P8_2$, $P8_3$, $P8_6$, $P8_7$, $P9_0$ to $P9_4$, $P10_0$ to $P10_7$, R, G, B, OUT1, OUT2			–10.0	mA
$I_{OH\ (avg)}$	HIGH average output current	$P0_0$ to $P0_7$, $P1_0$ to $P1_7$, $P2_0$ to $P2_7$, $P3_0$ to $P3_7$, $P4_0$ to $P4_7$, $P5_0$ to $P5_7$, $P6_0$ to $P6_3$, $P6_7$, $P7_2$ to $P7_7$, $P8_2$, $P8_3$, $P8_6$, $P8_7$, $P9_0$ to $P9_4$, $P10_0$ to $P10_7$, R, G, B, OUT1, OUT2			–5.0	mA
$I_{OL\ (peak)}$	LOW peak output current	$P0_0$ to $P0_7$, $P1_0$ to $P1_7$, $P2_0$ to $P2_7$, $P3_0$ to $P3_7$, $P4_0$ to $P4_7$, $P5_0$ to $P5_7$, $P6_0$ to $P6_3$, $P7_3$ to $P7_7$, $P8_2$, $P8_3$, $P8_6$, $P8_7$, $P9_0$ to $P9_2$, $P10_0$ to $P10_7$, R, G, B, OUT1, OUT2			10.0	mA
$I_{OL\ (avg)}$	LOW average output current	$P6_7$, $P7_0$ to $P7_2$, $P9_3$, $P9_4$			6.0	mA
$I_{OL\ (avg)}$	LOW average output current	$P0_0$ to $P0_7$, $P1_0$ to $P1_7$, $P2_0$ to $P2_7$, $P3_0$ to $P3_7$, $P4_0$ to $P4_7$, $P5_0$ to $P5_7$, $P6_0$ to $P6_3$, $P6_7$, $P7_2$ to $P7_7$, $P8_2$, $P8_3$, $P8_6$, $P8_7$, $P9_0$ to $P9_4$, $P10_0$ to $P10_7$, R, G, B, OUT1, OUT2			5.0	mA
f (X_{IN})	Main clock input oscillation frequency				10	MHz
f (X_{CIN})	Sub-clock oscillation frequency			32.768	50	kHz
f_{OSC}	Oscillation frequency (for OSD) OSC1	LC oscillating mode	11.0		27.0	MHz
		Ceramic oscillating mode	15.0		27.0	
f_{CVIN}	Input frequency	Horizontal sync. signal of video signal	15.262	15.743	16.206	kHz
V_I	Input amplitude video signal	CV_{IN}	1.5	2.0	2.5	V

Notes 1: The mean output current is the mean value within 100 ms.

2: The total $I_{OL\ (peak)}$ for ports P0, P1, P2, $P8_6$, $P8_7$, P9, and P10 must be 80 mA max. The total $I_{OH\ (peak)}$ for ports P0, P1, P2, $P8_6$, $P8_7$, P9, and P10 must be 80 mA max. The total $I_{OL\ (peak)}$ for ports P3, P4, P5, P6, P7, $P8_2$ and $P8_3$ must be 80 mA max. The total $I_{OH\ (peak)}$ for ports P3, P4, P5, P6, $P7_2$ to $P7_7$, $P8_2$ and $P8_3$ must be 80 mA max.

3: Connect 0.1 µF or more capacitor externally between the power source pins V_{CC}–V_{SS} and AV_{CC}–V_{SS} so as to reduce power source noise. Also connect 0.1 µF or more capacitor externally between the power source pins V_{CC}–CNV_{SS}.

5.3 Electrical Characteristics

Table 5.3.1 Electrical characteristics (referenced to V_{CC} = 5 V, V_{SS} = 0 V at Ta = 25 °C, f(X_{IN}) = 10 MHz unless otherwise specified)

Symbol	Parameter			Measuring condition			Standard Min.	Standard Typ.	Standard Max.	Unit
V_{OH}	HIGH output voltage	$P0_0$ to $P0_7$, $P1_0$ to $P1_7$, $P2_0$ to $P2_7$, $P3_0$ to $P3_7$, $P4_0$ to $P4_7$, $P5_0$ to $P5_7$, $P6_0$ to $P6_3$, $P6_7$, $P7_2$ to $P7_7$, $P8_2$, $P8_3$, $P8_6$, $P8_7$, $P9_0$ to $P9_4$, $P10_0$ to $P10_7$, R, G, B, OUT1, OUT2		I_{OH} = –5 mA			3.0			V
V_{OH}	HIGH output voltage	$P0_0$ to $P0_7$, $P1_0$ to $P1_7$, $P2_0$ to $P2_7$, $P3_0$ to $P3_7$, $P4_0$ to $P4_7$, $P5_0$ to $P5_7$		I_{OH} = –200 µA			4.7			V
V_{OH}	HIGH output voltage	X_{OUT}	HIGH POWER	I_{OH} = –1 mA			3.0			V
			LOW POWER	I_{OH} = –0.5 mA			3.0			
V_{OL}	LOW output voltage	$P0_0$ to $P0_7$, $P1_0$ to $P1_7$, $P2_0$ to $P2_7$, $P3_0$ to $P3_7$, $P4_0$ to $P4_7$, $P5_0$ to $P5_7$, $P6_0$ to $P6_3$, $P7_3$ to $P7_7$, $P8_2$, $P8_3$, $P8_6$, $P8_7$, $P9_0$ to $P9_2$, $P10_0$ to $P10_7$, R, G, B, OUT1, OUT2		I_{OL} = 5 mA					2.0	V
V_{OL}	LOW output voltage	$P6_7$, $P7_0$ to $P7_2$, $P9_3$, $P9_4$		I_{OL} = 6.0 mA					0.6	V
V_{OL}	LOW output voltage	$P0_0$ to $P0_7$, $P1_0$ to $P1_7$, $P2_0$ to $P2_7$, $P3_0$ to $P3_7$, $P4_0$ to $P4_7$, $P5_0$ to $P5_3$		I_{OL} = 200 µA					0.45	V
V_{OL}	LOW output voltage	X_{OUT}	HIGHPOWER	I_{OL} = 1 mA					2.0	V
			LOWPOWER	I_{OL} = 0.5 mA					2.0	
V_{T+}-V_{T-}	Hysteresis	$\overline{HOLD}$, $\overline{RDY}$, $TB0_{IN}$ to $TB2_{IN}$, $\overline{INT_0}$, $\overline{INT_1}$, $\overline{CTS_0}$, $\overline{CTS_2}$, CLK_0, CLK_2, SCL1 to SCL3, SDA1 to SDA3, H_{SYNC}, V_{SYNC}, HC0, HC1, RxD_0					0.2		0.8	V
V_{T+}-V_{T-}	Hysteresis	$\overline{RESET}$					0.2		1.8	V
V_{T+}-V_{T-}	Hysteresis	X_{IN}					0.2		0.8	V
I_{IH}	HIGH input current	$P0_0$ to $P0_7$, $P1_0$ to $P1_7$, $P2_0$ to $P2_7$, $P3_0$ to $P3_7$, $P4_0$ to $P4_7$, $P5_0$ to $P5_7$, $P6_0$ to $P6_3$, $P6_7$, $P7_0$ to $P7_7$, $P8_2$, $P8_3$, $P8_6$, $P8_7$, $P9_0$ to $P9_4$, $P10_0$ to $P10_7$, X_{IN}, $\overline{RESET}$, CNVss, BYTE, OSC1		V_I = 5 V					5.0	µA
I_{IL}	LOW input current	$P0_0$ to $P0_7$, $P1_0$ to $P1_7$, $P2_0$ to $P2_7$, $P3_0$ to $P3_7$, $P4_0$ to $P4_7$, $P5_0$ to $P5_7$, $P6_0$ to $P6_3$, $P6_7$, $P7_0$ to $P7_7$, $P8_2$, $P8_3$, $P8_6$, $P8_7$, $P9_0$ to $P9_4$, $P10_0$ to $P10_7$, X_{IN}, $\overline{RESET}$, CNVss, BYTE, OSC1		V_I = 0 V					–5.0	µA
R_{PULLUP}	Pull-up resistor	$P0_0$ to $P0_7$, $P1_0$ to $P1_7$, $P2_0$ to $P2_7$, $P3_0$ to $P3_7$, $P4_0$ to $P4_7$, $P5_0$ to $P5_7$, $P6_0$ to $P6_3$, $P6_7$, $P7_2$ to $P7_7$, $P8_2$, $P8_3$, $P8_6$, $P8_7$, $P9_0$ to $P9_4$, $P10_0$ to $P10_7$		V_I = 0 V			30.0	50.0	167.0	kΩ
I_{CC}	Power supply current			In single-chip mode, the output pins are open and other pins are V_{SS}	f(X_{IN}) = 10 MHz Square wave, no division	OSD ON, Data slicer ON		70	90	mA
						OSD OFF, Data slicer OFF		30	50	
					f(X_{IN}) = 10 MHz Square wave, division by 8	OSD OFF, Data slicer OFF		10		mA
					f(XCIN) = 32kHz When a WAIT instruction is executed			10		µA
					Ta=25 °C when clock is stopped				10	µA
					Ta = 70 °C when clock is stopped				200	
R_{BS}	I²C-BUS • BUS switch connection resistor (between SCL1 and SCL2, SDA1 and SDA2)			V_{CC} = 4.5 V					130	Ω
R_{fXIN}	Feedback resistor X_{IN}							1.0		MΩ
R_{fXCIN}	Feedback resistor X_{CIN}							6.0		MΩ

5.4 A-D Conversion Characteristics

Table 5.4.1 A-D conversion characteristics (referenced to V_{CC} = AV_{CC} = 5V, V_{SS} = 0 V at Ta = 25 °C, f(X_{IN}) = 10 MHz unless otherwise specified)

Symbol	Parameter		Measuring condition	Standard			Unit
				Min.	Typ.	Max.	
—	Resolution		V_{REF} = V_{CC}			8	Bits
—	Absolute accuracy	Sample & hold function not available	V_{REF} = V_{CC} = 5 V			±5	LSB
		Sample & hold function available (8 bit)	V_{REF} = V_{CC} = 5 V			±5	LSB
R_{LADDER}	Ladder resistance		V_{REF} = V_{CC}	10		40	kΩ
t_{CONV}	Conversion time			2.8			µs
t_{SAMP}	Sampling time			0.3			µs
V_{REF}	Reference voltage				V_{CC}		V
V_{IA}	Analog input voltage			0		V_{CC}	V

5.5 D-A Conversion Characteristics

Table 5.5.1 D-A conversion characteristics (referenced to V_{CC} = 5V, V_{SS} = 0V, at Ta = 25 °C, f(X_{IN}) = 10 MHz unless otherwise specified)

Symbol	Parameter	Measuring condition	Standard			Unit
			Min.	Typ.	Max.	
—	Resolution				8	Bits
—	Absolute accuracy				10	%
t_{su}	Setup time				3	µs
R_O	Output resistance		4	10	20	kΩ
I_{VREF}	Reference power supply input current	(Note)			1.5	mA

Note: This applies when using one D-A converter, with the D-A register for the unused D-A converter set to "00_{16}."
The A-D converter's ladder resistance is not included.
Also, when the Vref is unconnected at the A-D control register, I_{VREF} is sent.

5.6 Analog R, G, B Output Characteristics

Table 5.6.1 Analog R, G, B output characteristics (V_{CC} = 5V, V_{SS} = 0V, at Ta = 25 °C, f(X_{IN}) = 10 MHz unless otherwise specified)

Symbol	Parameter	Test conditions	Standard		Unit
			Min.	Max.	
R_O	Output impedance			2	kΩ
V_{OE}	Output deviation			±0.5	V
T_{ST}	Settling time	load capacity of 10 pF, load resistance of 20 kΩ, 70 % DC level		50	ns

5.7 Timing Requirements

Table 5.7.1 External clock input (referenced to Vcc = 5 V, Vss = 0 V at Ta = 25 °C unless otherwise specified)

Symbol	Parameter	Standard		Unit
		Min.	Max.	
t_c	External clock input cycle time	100		ns
$t_{w(H)}$	External clock input HIGH pulse width	40		ns
$t_{w(L)}$	External clock input LOW pulse width	40		ns
t_r	External clock rise time		15	ns
t_f	External clock fall time		15	ns

Table 5.7.2 Memory expansion and microprocessor modes (referenced to Vcc = 5 V, Vss = 0 V at Ta = 25 °C unless otherwise specified)

Symbol	Parameter	Standard		Unit
		Min.	Max.	
$t_{ac1(RD-DB)}$	Data input access time (no wait)		(Note)	ns
$t_{ac2(RD-DB)}$	Data input access time (with wait)		(Note)	ns
$t_{ac3(RD-DB)}$	Data input access time (when accessing multiplex bus area)		(Note)	ns
$t_{su(DB-RD)}$	Data input setup time	40		ns
$t_{su(RDY-BCLK)}$	$\overline{RDY}$ input setup time	30		ns
$t_{su(HOLD-BCLK)}$	$\overline{HOLD}$ input setup time	40		ns
$t_{h(RD-DB)}$	Data input hold time	0		ns
$t_{h(BCLK-RDY)}$	$\overline{RDY}$ input hold time	0		ns
$t_{h(BCLK-HOLD)}$	$\overline{HOLD}$ input hold time	0		ns
$t_{d(BCLK-HLDA)}$	$\overline{HLDA}$ output delay time		40	ns

Note: Calculated according to the BCLK frequency as follows:

$$t_{ac1}(RD-DB) = \frac{10^9}{f(BCLK) \times 2} - 45 \quad [ns]$$

$$t_{ac2}(RD-DB) = \frac{3 \times 10^9}{f(BCLK) \times 2} - 45 \quad [ns]$$

$$t_{ac3}(RD-DB) = \frac{3 \times 10^9}{f(BCLK) \times 2} - 45 \quad [ns]$$

Table 5.7.3 Timer B input (counter input in event counter mode)

(referenced to Vcc = 5 V, Vss = 0 V at Ta = 25 °C unless otherwise specified)

Symbol	Parameter	Standard		Unit
		Min.	Max.	
$t_{c(TB)}$	TBiIN input cycle time (counted on one edge)	100		ns
$t_{w(TBH)}$	TBiIN input HIGH pulse width (counted on one edge)	40		ns
$t_{w(TBL)}$	TBiIN input LOW pulse width (counted on one edge)	40		ns
$t_{c(TB)}$	TBiIN input cycle time (counted on both edges)	200		ns
$t_{w(TBH)}$	TBiIN input HIGH pulse width (counted on both edges)	80		ns
$t_{w(TBL)}$	TBiIN input LOW pulse width (counted on both edges)	80		ns

Table 5.7.4 Timer B input (pulse period measurement mode)

(referenced to Vcc = 5 V, Vss = 0 V at Ta = 25 °C unless otherwise specified)

Symbol	Parameter	Standard		Unit
		Min.	Max.	
$t_{c(TB)}$	TBiIN input cycle time	400		ns
$t_{w(TBH)}$	TBiIN input HIGH pulse width	200		ns
$t_{w(TBL)}$	TBiIN input LOW pulse width	200		ns

Table 5.7.5 Timer B input (pulse width measurement mode)

(referenced to Vcc = 5 V, Vss = 0 V at Ta = 25 °C unless otherwise specified)

Symbol	Parameter	Standard		Unit
		Min.	Max.	
$t_{c(TB)}$	TBiIN input cycle time	400		ns
$t_{w(TBH)}$	TBiIN input HIGH pulse width	200		ns
$t_{w(TBL)}$	TBiIN input LOW pulse width	200		ns

Table 5.7.6 Serial I/O (referenced to Vcc = 5 V, Vss = 0 V at Ta = 25 °C unless otherwise specified)

Symbol	Parameter	Standard		Unit
		Min.	Max.	
$t_{c(CK)}$	CLKi input cycle time	200		ns
$t_{w(CKH)}$	CLKi input HIGH pulse width	100		ns
$t_{w(CKL)}$	CLKi input LOW pulse width	100		ns
$t_{d(C-Q)}$	TxDi output delay time		80	ns
$t_{h(C-Q)}$	TxDi hold time	0		ns
$t_{su(D-C)}$	RxDi input setup time	30		ns
$t_{h(C-D)}$	RxDi input hold time	90		ns

Table 5.7.7 External interrupt $\overline{INTi}$ inputs (referenced to Vcc = 5 V, Vss = 0 V at Ta = 25 °C unless otherwise specified)

Symbol	Parameter	Standard		Unit
		Min.	Max.	
$t_{w(INH)}$	$\overline{INTi}$ input HIGH pulse width	250		ns
$t_{w(INL)}$	$\overline{INTi}$ input LOW pulse width	250		ns

5.8 Switching Characteristics

Table 5.8.1 Memory expansion mode and microprocessor mode (no wait) (referenced to Vcc = 5 V, Vss = 0 V at Ta = 25 °C, CM15 = "1" unless otherwise specified)

Symbol	Parameter	Measuring condition	Standard		Unit
			Min.	Max.	
$t_{d(BCLK-AD)}$	Address output delay time	Figure 5.9.1		35	ns
$t_{h(BCLK-AD)}$	Address output hold time (BCLK standard)		4		ns
$t_{h(RD-AD)}$	Address output hold time (RD standard)		0		ns
$t_{h(WR-AD)}$	Address output hold time (WR standard)		0		ns
$t_{d(BCLK-CS)}$	Chip select output delay time			35	ns
$t_{h(BCLK-CS)}$	Chip select output hold time (BCLK standard)		4		ns
$t_{d(BCLK-ALE)}$	ALE signal output delay time			35	ns
$t_{h(BCLK-ALE)}$	ALE signal output hold time		– 4		ns
$t_{d(BCLK-RD)}$	RD signal output delay time			35	ns
$t_{h(BCLK-RD)}$	RD signal output hold time		0		ns
$t_{d(BCLK-WR)}$	WR signal output delay time			35	ns
$t_{h(BCLK-WR)}$	WR signal output hold time		0		ns
$t_{d(BCLK-DB)}$	Data output delay time (BCLK standard)			40	ns
$t_{h(BCLK-DB)}$	Data output hold time (BCLK standard)		4		ns
$t_{d(DB-WR)}$	Data output delay time (WR standard)		(Note 1)		ns
$t_{h(WR-DB)}$	Data output hold time (WR standard)(Note 2)		0		ns

Note 1: Calculated according to the BCLK frequency as follows:

$$td(DB - WR) = \frac{10^9}{f(BCLK)} - 40 \quad [ns]$$

2: This is standard value shows the timing when the output is off, and does not show hold time of data bus.
Hold time of data bus is different by capacitor volume and pull-up (pull-down) resistance value.
Hold time of data bus is expressed in

$$t = -CR \times \ln(1 - V_{OL} / V_{CC})$$

by a circuit of the right figure.
For example, when $V_{OL} = 0.2V_{CC}$, C = 30 pF, R = 1 kΩ, hold time of output "L" level is

$$t = -30\ pF \times 1k\Omega \times \ln(1 - 0.2V_{CC} / V_{CC})$$
$$= 6.7\ ns.$$

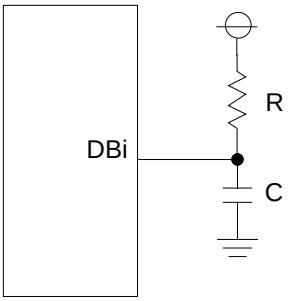

Table 5.8.2 Memory expansion mode and microprocessor mode

(with wait, accessing external memory)

(referenced to Vcc = 5 V, Vss = 0 V at Ta = 25 °C, CM15 = "1" unless otherwise specified)

Symbol	Parameter	Measuring condition	Standard		Unit
			Min.	Max.	
$t_{d(BCLK-AD)}$	Address output delay time	Figure 5.9.1		35	ns
$t_{h(BCLK-AD)}$	Address output hold time (BCLK standard)		4		ns
$t_{h(RD-AD)}$	Address output hold time (RD standard)		0		ns
$t_{h(WR-AD)}$	Address output hold time (WR standard)		0		ns
$t_{d(BCLK-CS)}$	Chip select output delay time			35	ns
$t_{h(BCLK-CS)}$	Chip select output hold time (BCLK standard)		4		ns
$t_{d(BCLK-ALE)}$	ALE signal output delay time			35	ns
$t_{h(BCLK-ALE)}$	ALE signal output hold time		– 4		ns
$t_{d(BCLK-RD)}$	RD signal output delay time			35	ns
$t_{h(BCLK-RD)}$	RD signal output hold time		0		ns
$t_{d(BCLK-WR)}$	WR signal output delay time			35	ns
$t_{h(BCLK-WR)}$	WR signal output hold time		0		ns
$t_{d(BCLK-DB)}$	Data output delay time (BCLK standard)			40	ns
$t_{h(BCLK-DB)}$	Data output hold time (BCLK standard)		4		ns
$t_{d(DB-WR)}$	Data output delay time (WR standard)		(Note 1)		ns
$t_{h(WR-DB)}$	Data output hold time (WR standard)(Note 2)		0		ns

Note 1: Calculated according to the BCLK frequency as follows:

$$td(DB - WR) = \frac{10^9}{f(BCLK)} - 40 \quad [ns]$$

2: This is standard value shows the timing when the output is off, and does not show hold time of data bus.
Hold time of data bus is different by capacitor volume and pull-up (pull-down) resistance value.
Hold time of data bus is expressed in

$t = -CR \times \ln(1 - V_{OL} / V_{CC})$

by a circuit of the right figure.
For example, when $V_{OL} = 0.2V_{CC}$, C = 30 pF, R = 1 kΩ, hold time of output "L" level is

$t = -30\ pF \times 1k\Omega \times \ln(1 - 0.2V_{CC} / V_{CC})$
$= 6.7$ ns.

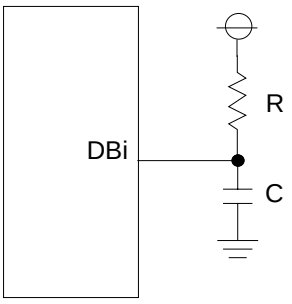

Table 5.8.3 Memory expansion mode and microprocessor mode
(with wait, accessing external memory, multiplex bus area selected)
(referenced to Vcc = 5 V, Vss = 0 V at Ta = 25 °C, CM15 = "1" unless otherwise specified)

Symbol	Parameter	Measuring condition	Standard		Unit
			Min.	Max.	
$t_{d(BCLK-AD)}$	Address output delay time	Figure 5.9.1		35	ns
$t_{h(BCLK-AD)}$	Address output hold time (BCLK standard)		4		ns
$t_{h(RD-AD)}$	Address output hold time (RD standard)		(Note)		ns
$t_{h(WR-AD)}$	Address output hold time (WR standard)		(Note)		ns
$t_{d(BCLK-CS)}$	Chip select output delay time			35	ns
$t_{h(BCLK-CS)}$	Chip select output hold time (BCLK standard)		4		ns
$t_{h(RD-CS)}$	Chip select output hold time (RD standard)		(Note)		ns
$t_{h(WR-CS)}$	Chip select output hold time (WR standard)		(Note)		ns
$t_{d(BCLK-RD)}$	RD signal output delay time			35	ns
$t_{h(BCLK-RD)}$	RD signal output hold time		0		ns
$t_{d(BCLK-WR)}$	WR signal output delay time			35	ns
$t_{h(BCLK-WR)}$	WR signal output hold time		0		ns
$t_{d(BCLK-DB)}$	Data output delay time (BCLK standard)			40	ns
$t_{h(BCLK-DB)}$	Data output hold time (BCLK standard)		4		ns
$t_{d(DB-WR)}$	Data output delay time (WR standard)		(Note)		ns
$t_{h(WR-DB)}$	Data output hold time (WR standard)		(Note)		ns
$t_{d(BCLK-ALE)}$	ALE signal output delay time (BCLK standard)			35	ns
$t_{h(BCLK-ALE)}$	ALE signal output hold time (BCLK standard)		– 4		ns
$t_{d(AD-ALE)}$	ALE signal output delay time (Address standard)		(Note)		ns
$t_{h(ALE-AD)}$	ALE signal output hold time (Adderss standard)		30		ns
$t_{d(AD-RD)}$	Post-address RD signal output delay time		0		ns
$t_{d(AD-WR)}$	Post-address WR signal output delay time		0		ns
$t_{dZ(RD-AD)}$	Address output floating start time			8	ns

Note: Calculated according to the BCLK frequency as follows:

$$th(RD - AD) = \frac{10^9}{f(BCLK) \times 2} \quad [ns]$$

$$th(WR - AD) = \frac{10^9}{f(BCLK) \times 2} \quad [ns]$$

$$th(RD - CS) = \frac{10^9}{f(BCLK) \times 2} \quad [ns]$$

$$th(WR - CS) = \frac{10^9}{f(BCLK) \times 2} \quad [ns]$$

$$td(DB - WR) = \frac{10^9 \times 3}{f(BCLK) \times 2} - 40 \quad [ns]$$

$$th(WR - DB) = \frac{10^9}{f(BCLK) \times 2} \quad [ns]$$

$$td(AD - ALE) = \frac{10^9}{f(BCLK) \times 2} - 25 \quad [ns]$$

5.9 Measurement Circuit

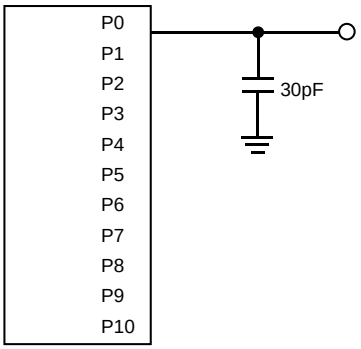

Figure 5.9.1 Port P0 to P10 measurement circuit

5.10 Timing Diagram

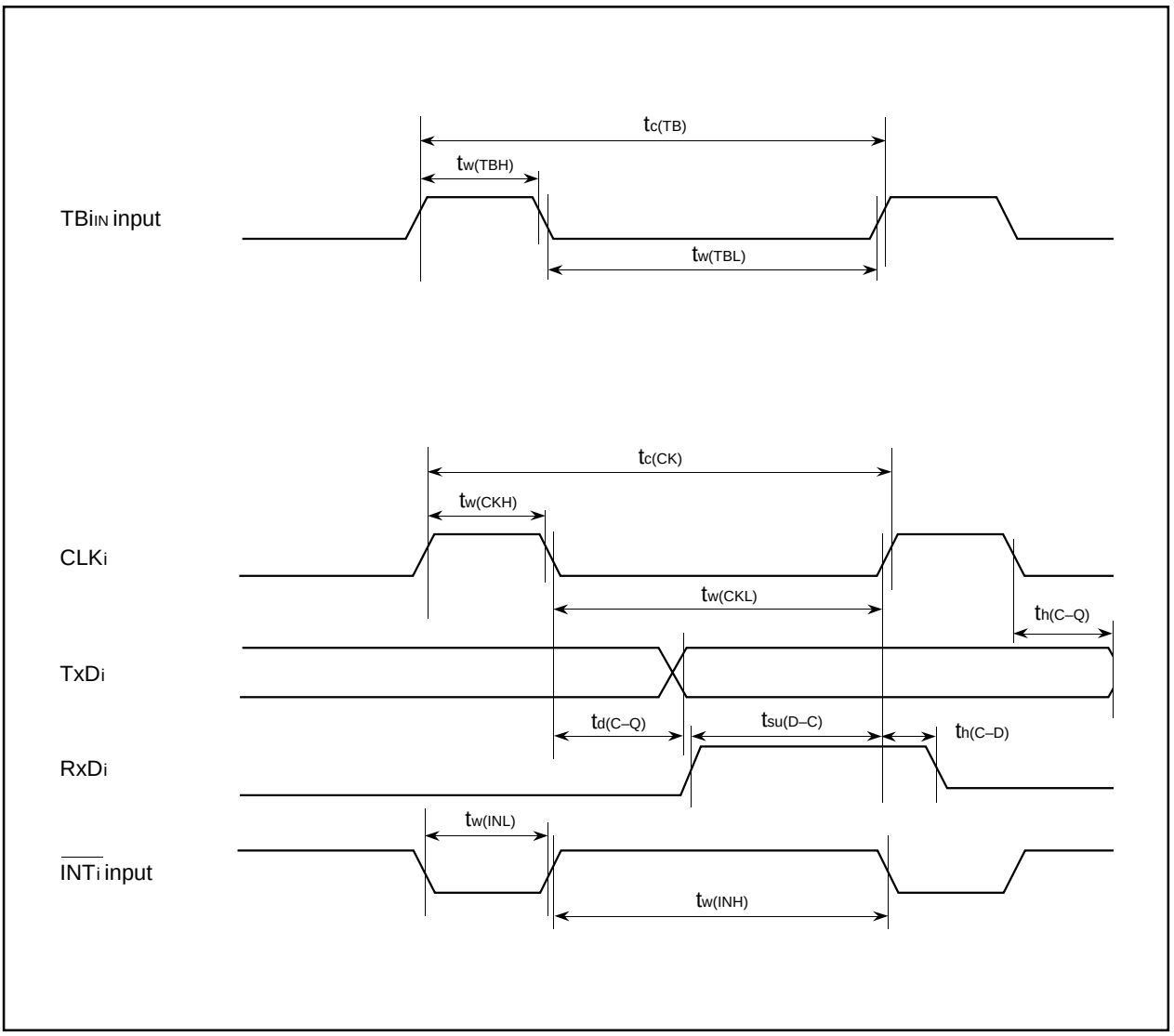

Figure 5.10.1 Timing diagram

Memory Expansion Mode and Microprocessor Mode
(Valid only with wait)

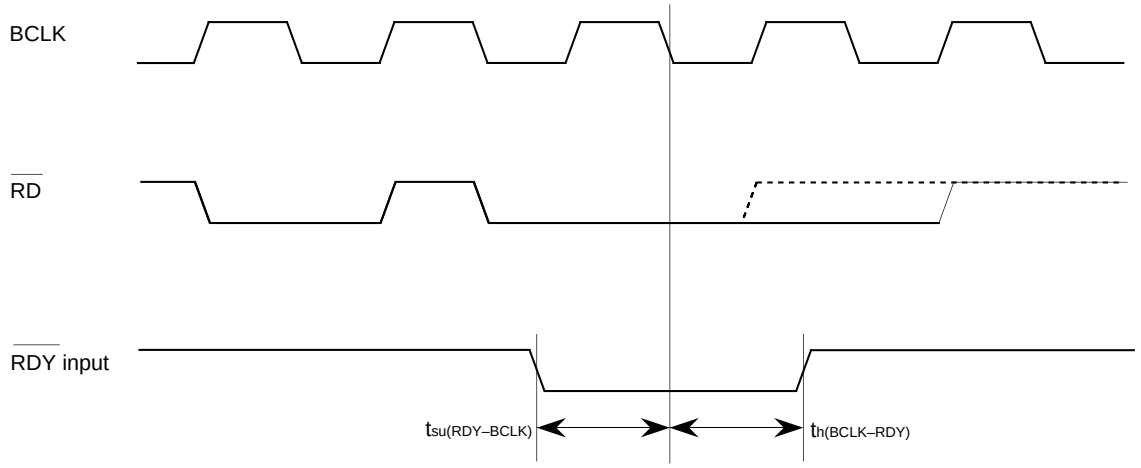

(Valid with or without wait)

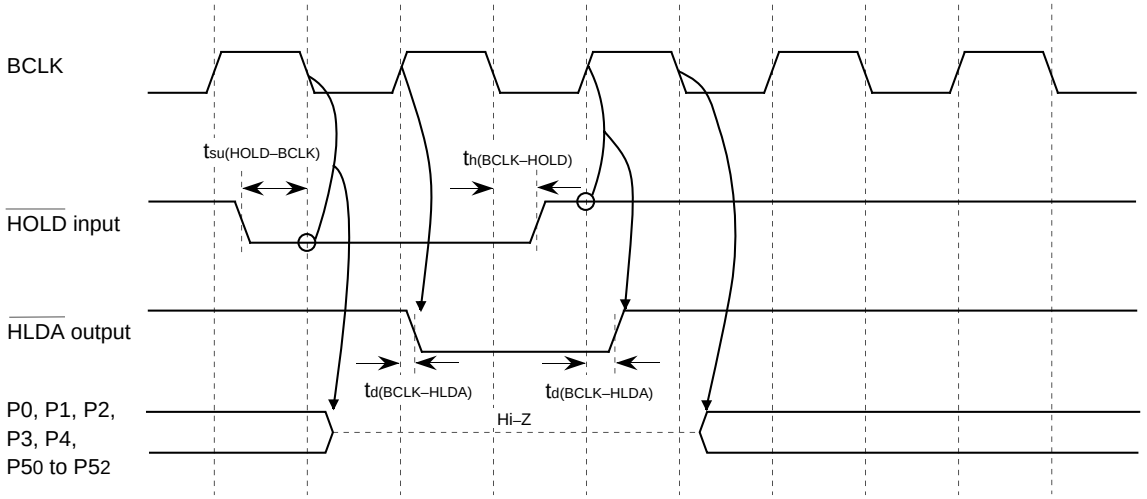

Note: The above pins are set to high-impedance regardless of the input level of the BYTE pin and bit (PM06) of processor mode register 0 selects the function of ports $P4_0$ to $P4_3$.

Measuring conditions
- V_{CC}=5V
- Input timing voltage : Determined with V_{IL}=1.0V, V_{IH}=4.0V
- Output timing voltage : Determined with V_{OL}=2.5V, V_{OH}=2.5V

Figure 5.10.2 Timing diagram in memory expansion mode and microprocessor mode (1)

Memory Expansion Mode and Microprocessor Mode
(With no wait)

Read timing

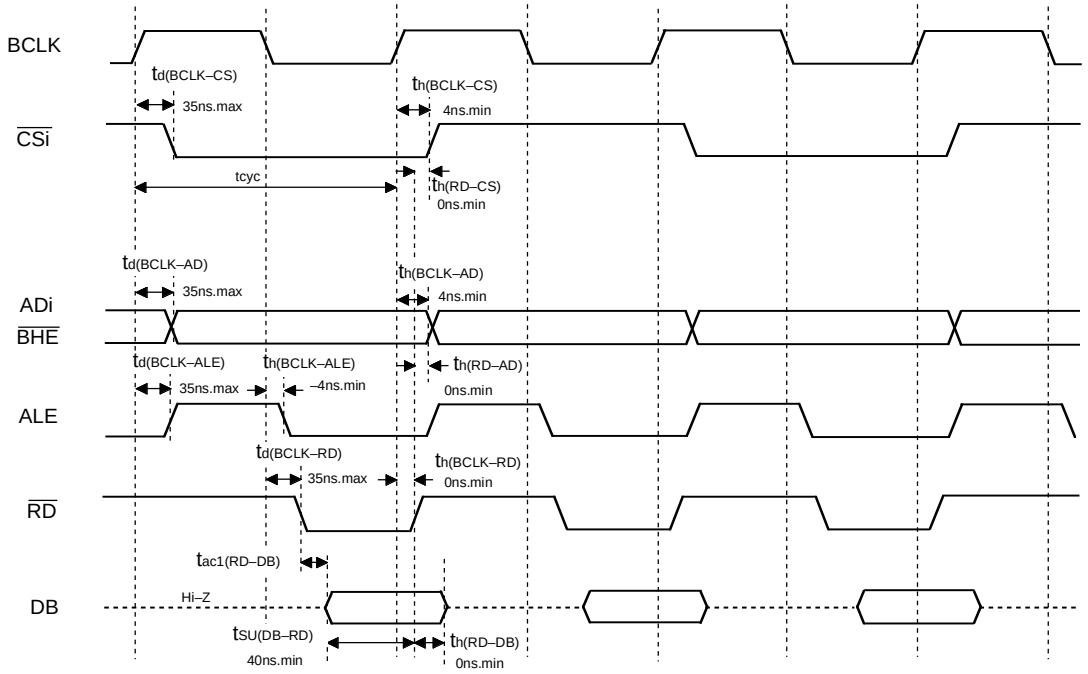

Write timing

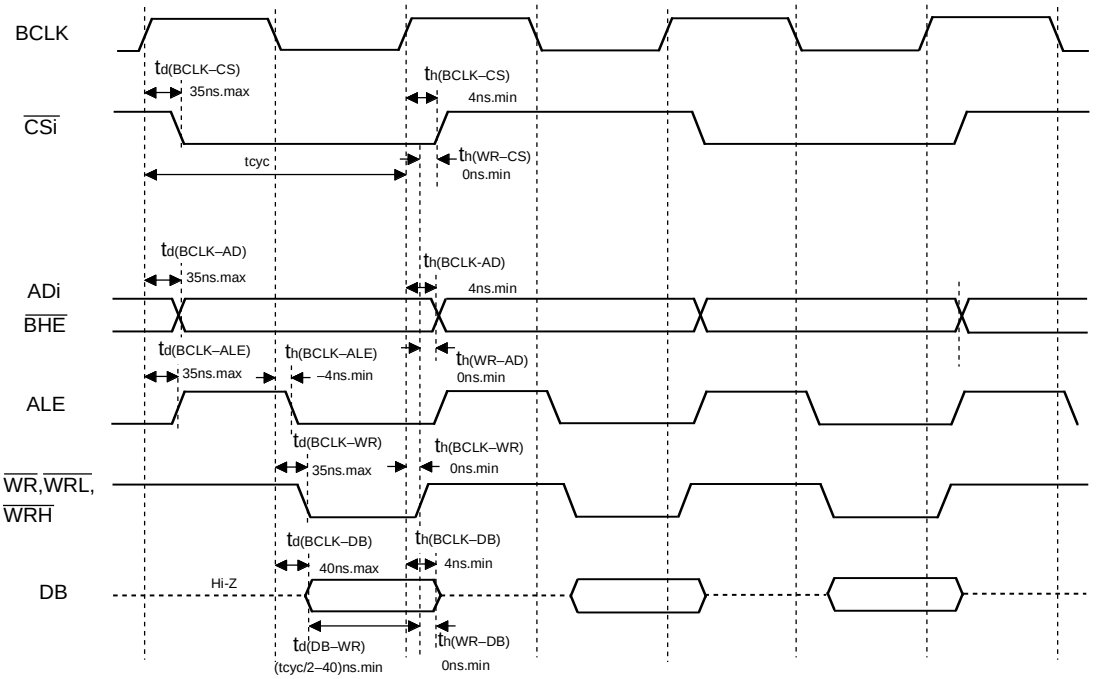

Figure 5.10.3 Timing diagram in memory expansion mode and microprocessor mode (2)

Memory Expansion Mode and Microprocessor Mode
(When accessing external memory area with wait)

Read timing

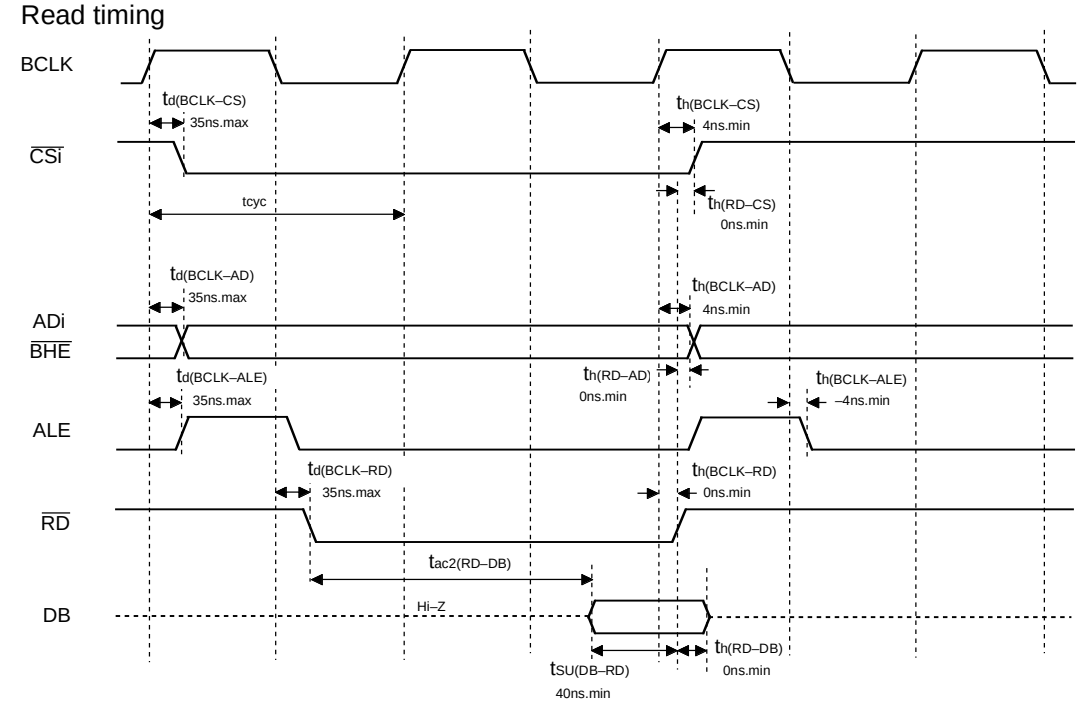

Write timing

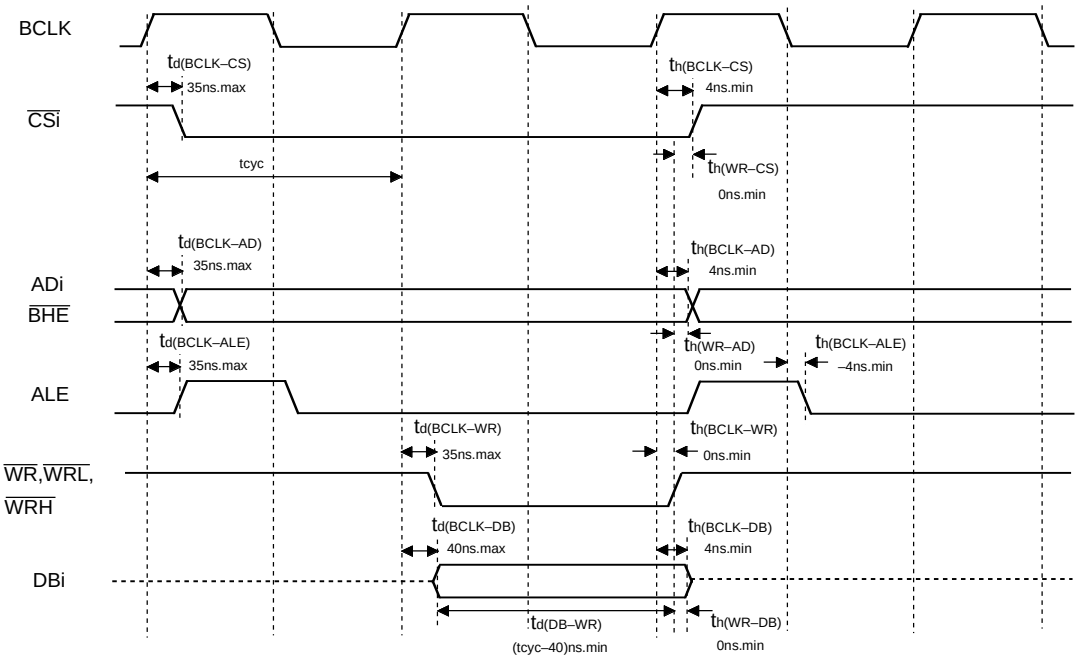

Measuring conditions
- V_{CC}=5V
- Input timing voltage : Determined with: V_{IL}=0.8V, V_{IH}=2.5V
- Output timing voltage : Determined with: V_{OL}=0.8V, V_{OH}=2.0V

Figure 5.10.4 Timing diagram in memory expansion mode and microprocessor mode (3)

Memory Expansion Mode and Microprocessor Mode

(When accessing external memory area with wait, and select multiplexed bus)

Read timing

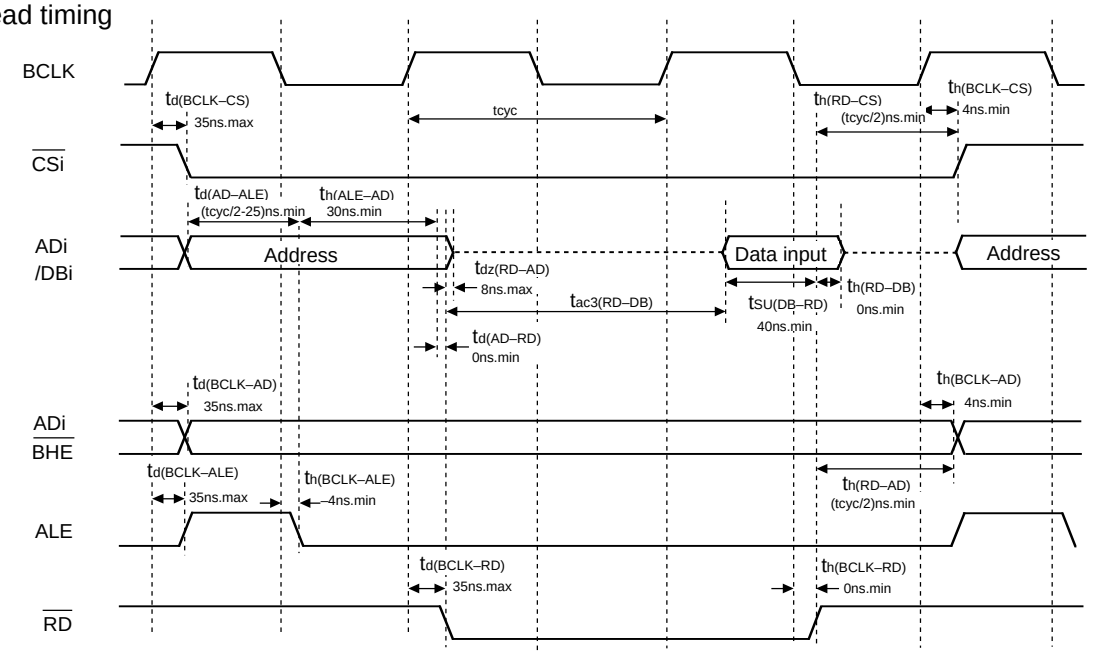

Write timing

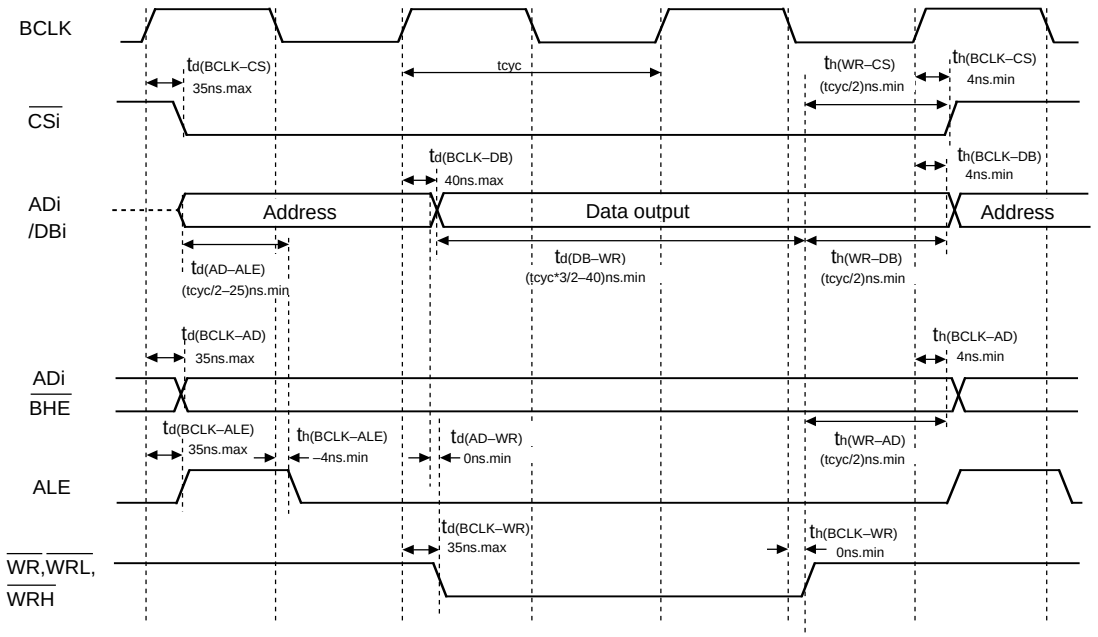

Measuring conditions
- V_{CC}=5V
- Input timing voltage : Determined with V_{IL}=0.8V, V_{IH}=2.5V
- Output timing voltage : Determined with V_{OL}=0.8V, V_{OH}=2.0V

Figure 5.10.5 Timing diagram in memory expansion mode and microprocessor mode (4)

6. MASK CONFIRMATION FORM

GZZ—SH56—54B <94A0>

Mask ROM number	

MITSUBISHI ELECTRIC SINGLE-CHIP 16-BIT MICROCOMPUTER M306V2ME-XXXFP
MASK ROM CONFIRMATION FORM

Receipt	Date :	
	Section head signature	Supervisor signature

Note : Please complete all items marked ※.

※	Customer	Company name	TEL ( )	Issuance signature	Submitted by	Supervisor
		Date issued	Date :			

※1. Check sheet

Name the product you order, and choose which to give in, EPROMs or floppy disks.
If you order by means of EPROMs, three sets of EPROMs are required per pattern. If you order by means of floppy disks, one floppy disk is required per pattern.

☐ In the case of EPROMs

Mitsubishi will create the mask using the data on the EPROMs supplied, providing the data is the same on at least two of those sets. Mitsubishi will, therefore, only accept liability if there is any discrepancy between the data on the EPROM sets and the ROM data written to the product.
Please carefully check the data on the EPROMs being submitted to Mitsubishi.

Checksum code for total EPROM area : | | | | | (hex)

EPROM type :

☐ **27C401**

Address	
00000_{16}	Product : Area containing ASCII code for M306V2ME -
$0000F_{16}$	
00010_{16}	
$0FFFF_{16}$	
10000_{16}	OSD ROM
30000_{16}	
50000_{16}	ROM(192K)
$7FFFF_{16}$	

(1) The area from 00000_{16} to $0000F_{16}$ is for storing data on the product type name.
The ASCII code for 'M306V5ME-' is shown at right.
The data in this table must be written to address 00000_{16} to $0000F_{16}$.
Both address and data are shown in hex.
(2) Write "FF_{16}" to the lined area.

Address			Address		
00000_{16}	'M '	$= 4D_{16}$	00008_{16}	' — '	$= 2D_{16}$
00001_{16}	'3 '	$= 33_{16}$	00009_{16}		FF_{16}
00002_{16}	'0 '	$= 30_{16}$	$0000A_{16}$		FF_{16}
00003_{16}	'6 '	$= 36_{16}$	$0000B_{16}$		FF_{16}
00004_{16}	'V '	$= 56_{16}$	$0000C_{16}$		FF_{16}
00005_{16}	'2 '	$= 32_{16}$	$0000D_{16}$		FF_{16}
00006_{16}	'M '	$= 4D_{16}$	$0000E_{16}$		FF_{16}
00007_{16}	'E '	$= 45_{16}$	$0000F_{16}$		FF_{16}

GZZ－SH56－54B <94A0>

Mask ROM number	

MITSUBISHI ELECTRIC SINGLE-CHIP 16-BIT MICROCOMPUTER M306V2ME-XXXFP MASK ROM CONFIRMATION FORM

(3) Be sure to store “FF$_{16}$” in the following test font addresses in OSD ROM.
When producing OSD ROM data with the OSD font editor program of Mitsubishi, “FF$_{16}$” is set automatically to these test font addresses.

(All addresses below are shown in hex.)

100FE	120FE	140FE	160FE	18002	1A002	1C002	1E002
100FF	120FF	140FF	160FF	18003	1A003	1C003	1E003
101FE	121FE	141FE	161FE	18102	1A102	1C102	1E102
101FF	121FF	141FF	161FF	18103	1A103	1C103	1E103
102FE	122FE	142FE	162FE	18202	1A202	1C202	1E202
102FF	122FF	142FF	162FF	18203	1A203	1C203	1E203
103FE	123FE	143FE	163FE	18302	1A302	1C302	1E302
103FF	123FF	143FF	163FF	18303	1A303	1C303	1E303
104FE	124FE	144FE	164FE	18402	1A402	1C402	1E402
104FF	124FF	144FF	164FF	18403	1A403	1C403	1E403
105FE	125FE	145FE	165FE	18502	1A502	1C502	1E502
105FF	125FF	145FF	165FF	18503	1A503	1C503	1E503
106FE	126FE	146FE	166FE	18602	1A602	1C602	1E602
106FF	126FF	146FF	166FF	18603	1A603	1C603	1E603
107FE	127FE	147FE	167FE	18702	1A702	1C702	1E702
107FF	127FF	147FF	167FF	18703	1A703	1C703	1E703
108FE	128FE	148FE	168FE	18802	1A802	1C802	1E802
108FF	128FF	148FF	168FF	18803	1A803	1C803	1E803
109FE	129FE	149FE	169FE	18902	1A902	1C902	1E902
109FF	129FF	149FF	169FF	18903	1A903	1C903	1E903
10AFE	12AFE	14AFE	16AFE	18A02	1AA02	1CA02	1EA02
10AFF	12AFF	14AFF	16AFF	18A03	1AA03	1CA03	1EA03
10BFE	12BFE	14BFE	16BFE	18B02	1AB02	1CB02	1EB02
10BFF	12BFF	14BFF	16BFF	18B03	1AB03	1CB03	1EB03
10CFE	12CFE	14CFE	16CFE	18C02	1AC02	1CC02	1EC02
10CFF	12CFF	14CFF	16CFF	18C03	1AC03	1CC03	1EC03
10DFE	12DFE	14DFE	16DFE	18D02	1AD02	1CD02	1ED02
10DFF	12DFF	14DFF	16DFF	18D03	1AD03	1CD03	1ED03
10EFE	12EFE	14EFE	16EFE	18E02	1AE02	1CE02	1EE02
10EFF	12EFF	14EFF	16EFF	18E03	1AE03	1CE03	1EE03
10FFE	12FFE	14FFE	16FFE	18F02	1AF02	1CF02	1EF02
10FFF	12FFF	14FFF	16FFF	18F03	1AF03	1CF03	1EF03
110FE	130FE	150FE	170FE	19002	1B002	1D002	1F002
110FF	130FF	150FF	170FF	19003	1B003	1D003	1F003
111FE	131FE	151FE	171FE	19102	1B102	1D102	1F102
111FF	131FF	151FF	171FF	19103	1B103	1D103	1F103
112FE	132FE	152FE	172FE	19202	1B202	1D202	1F202
112FF	132FF	152FF	172FF	19203	1B203	1D203	1F203
113FE	133FE	153FE	173FE	19302	1B302	1D302	1F302
113FF	133FF	153FF	173FF	19303	1B303	1D303	1F303
114FE	134FE	154FE	174FE	19402	1B402	1D402	1F402
114FF	134FF	154FF	174FF	19403	1B403	1D403	1F403
115FE	135FE	155FE	175FE	19502	1B502	1D502	1F502
115FF	135FF	155FF	175FF	19503	1B503	1D503	1F503
116FE	136FE	156FE	176FE	19602	1B602	1D602	1F602
116FF	136FF	156FF	176FF	19603	1B603	1D603	1F603
117FE	137FE	157FE	177FE	19702	1B702	1D702	1F702
117FF	137FF	157FF	177FF	19703	1B703	1D703	1F703
118FE	138FE	158FE	178FE	19802	1B802	1D802	1F802
118FF	138FF	158FF	178FF	19803	1B803	1D803	1F803
119FE	139FE	159FE	179FE	19902	1B902	1D902	1F902
119FF	139FF	159FF	179FF	19903	1B903	1D903	1F903

20400	20401	20600	20601	213F8	213F9	213FC	213FD
21400	21401	21600	21601	223F8	223F9	223FC	223FD
22400	22401	22600	22601	233F8	233F9	233FC	233FD
23400	23401	23600	23601	243F8	243F9	243FC	243FD
24400	24401	24600	24601	253F8	253F9	253FC	253FD
25400	25401	25600	25601	263F8	263F9	263FC	263FD
26400	26401	26600	26601	273F8	273F9	273FC	273FD
27400	27401	27600	27601	283F8	283F9	283FC	283FD
28400	28401	28600	28601	293F8	293F9	293FC	293FD
29400	29401	29600	29601	2A3F8	2A3F9	2A3FC	2A3FD
2A400	2A401	2A600	2A601	21BF8	21BF9	21BFC	21BFD
2B400	2B401	2B600	2B601	22BF8	22BF9	22BFC	22BFD
2C400	2C401	2C600	2C601	23BF8	23BF9	23BFC	23BFD
2D400	2D401	2D600	2D601	24BF8	24BF9	24BFC	24BFD
2E400	2E401	2E600	2E601	25BF8	25BF9	25BFC	25BFD
2F400	2F401	2F600	2F601	26BF8	26BF9	26BFC	26BFD
20C00	20C01	20E00	20E01	27BF8	27BF9	27BFC	27BFD
21C00	21C01	21E00	21E01	28BF8	28BF9	28BFC	28BFD
22C00	22C01	22E00	22E01	29BF8	29BF9	29BFC	29BFD
23C00	23C01	23E00	23E01	2ABF8	2ABF9	2ABFC	2ABFD
24C00	24C01	24E00	24E01				
25C00	25C01	25E00	25E01				
26C00	26C01	26E00	26E01				
27C00	27C01	27E00	27E01				
28C00	28C01	28E00	28E01				
29C00	29C01	29E00	29E01				
2AC00	2AC01	2AE00	2AE01				
2BC00	2BC01	2BE00	2BE01				
2CC00	2CC01	2CE00	2CE01				
2DC00	2DC01	2DE00	2DE01				
2EC00	2EC01	2EE00	2EE01				
2FC00	2FC01	2FE00	2FE01				
10000	10800	10001	10801				
11000	11800	11001	11801				
12000	12800	12001	12801				
13000	13800	13001	13801				
14000	14800	14001	14801				
15000	15800	15001	15801				
16000	16800	16001	16801				
17000	17800	17001	17801				
18000	18800	18001	18801				
19000	19800	19001	19801				
1A000	1A800	1A001	1A801				
1B000	1B800	1B001	1B801				
1C000	1C800	1C001	1C801				
1D000	1D800	1D001	1D801				
1E000	1E800	1E001	1E801				
1F000	1F800	1F001	1F801				

(2/4)

GZZ—SH56—54B <94A0>

Mask ROM number	

MITSUBISHI ELECTRIC SINGLE-CHIP 16-BIT MICROCOMPUTER M306V2ME-XXXFP MASK ROM CONFIRMATION FORM

The ASCII code for the type No. can be written to EPROM addresses 00000 16 to 0000F16 by specifying the pseudo-instructions shown in the following table at the beginning of the assembler source program.

EPROM type	27C401
Code entered in source program	△.SECTION△ASCIICODE, ROM DATA △.ORG △080000H △.BYTE △' M306V2ME- '

Note: The ROM cannot be processed if the type No. written to the EPROM does not match the type No. in the check sheet.

☐ In the case of floppy disks

Mitsubishi processes the mask files generated by the mask file generation utilities out of those held on the floppy disks you give in to us, and forms them into masks. Hence, we assume liability provided that there is any discrepancy between the contents of these mask files and the ROM data to be burned into products we produce. Check thoroughly the contents of the mask files you give in.
Prepare 3.5 inches 2HD(IBM format) floppy disks. And store only one mask file in a floppy disk.

File code : ☐☐☐☐☐☐☐☐ (hex)

Mask file name : ☐☐☐☐☐☐☐☐ .MSK (alpha-numeric 8-digit)

Note: When using the floppy disks, do not store the type No. to addresses 0000 16 to 0000F16.

※2. Mark specification

The mark specification differs according to the type of package. After entering the mark specification on the separate mark specification sheet (for each package), attach that sheet to this masking check sheet for submission to Mitsubishi.
For the M306V2ME-XXXFP, submit the 100P6S mark specification sheet.

GZZ—SH56—54B <94A0>

Mask ROM number	

MITSUBISHI ELECTRIC SINGLE-CHIP 16-BIT MICROCOMPUTER M306V2ME-XXXFP
MASK ROM CONFIRMATION FORM

※3. Usage Conditions

For our reference when of testing our products, please reply to the following questions about the usage of the products you ordered.

(1) Which kind of X_{IN}-X_{OUT} oscillation circuit is used?

☐Ceramic resonator ☐Quartz-crystal oscillator
☐External clock input ☐Other ( )

What frequency do you use?

$f(X_{IN})$ = ☐ MHz

(2) Which kind of X_{CIN}-X_{COUT} oscillation circuit is used?

☐ Ceramic resonator ☐ Quartz-crystal oscillator
☐ External clock input ☐ Other ( )

What frequency do you use?

$f(X_{CIN})$ = ☐ kHz

(3) Which operation mode do you use?

Single-chip mode Memory expansion mode
Microprocessor mode

Thank you cooperation.

※4. Special item (Indicate none if there is no specified item)

7. MARK SPECIFICATION FORM

100P6S (100-PIN QFP) MARK SPECIFICATION FORM

Mitsubishi IC catalog name

Please choose one of the marking types below (A, B, C), and enter the Mitsubishi catalog name and the special mark (if needed).

A. Standard Mitsubishi Mark

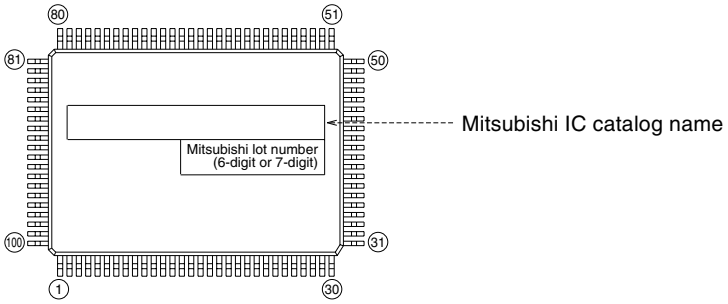

B. Customer's Parts Number + Mitsubishi catalog name

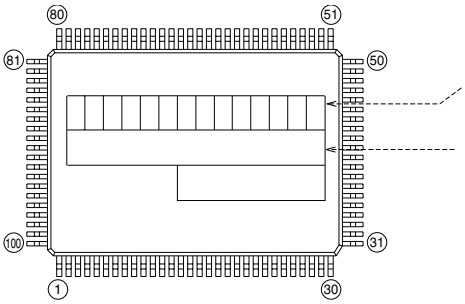

Customer's Parts Number
Note : The fonts and size of characters are standard Mitsubishi type.
Mitsubishi IC catalog name
Note1 : The mark field should be written right aligned.
2 : The fonts and size of characters are standard Mitsubishi type.
3 : Customer's Parts Number can be up to 14 characters : Only 0 ~ 9, A ~ Z, +, –, /, (,), &, , (periods), (commas) are usable.

C. Special Mark Required

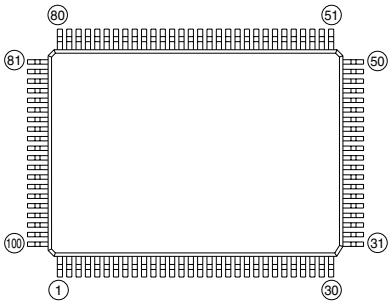

Note1 : If the Special Mark is to be Printed, indicate the desired layout of the mark in the left figure. The layout will be duplicated as close as possible.
Mitsubishi lot number (6-digit or 7-digit) and Mask ROM number (3-digit) are always marked.
2 : If the customer's trade mark logo must be used in the Special Mark, check the box below.
Please submit a clean original of the logo.
For the new special character fonts a clean font original (ideally logo drawing) must be submitted.

Special logo required

8. ONE TIME PROM VERSION M306V2EEFP MARKING

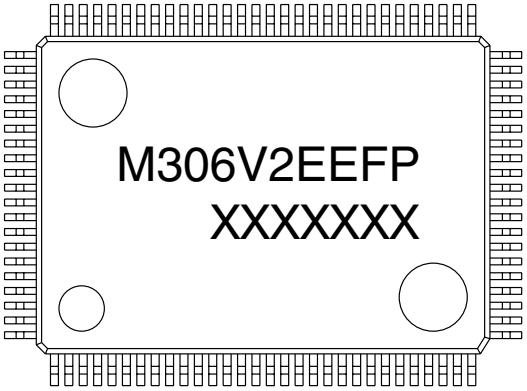

xxxxxxx is mitsubishi lot number

9. PACKAGE OUTLINE

100P6S-A (MMP) **Plastic 100pin 14×20mm body QFP**

EIAJ Package Code	JEDEC Code	Weight(g)	Lead Material
QFP100-P-1420-0.65	–	1.58	Alloy 42

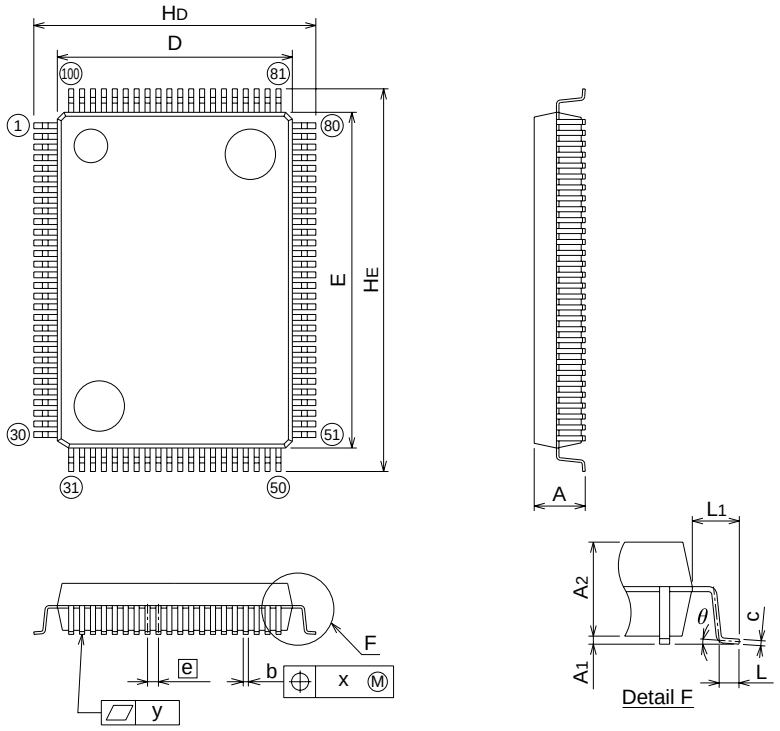

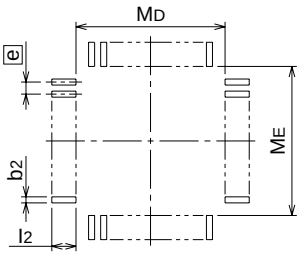

Recommended Mount Pad

Symbol	Dimension in Millimeters		
	Min	Nom	Max
A	–	–	3.05
A1	0	0.1	0.2
A2	–	2.8	–
b	0.25	0.3	0.4
c	0.13	0.15	0.2
D	13.8	14.0	14.2
E	19.8	20.0	20.2
e	–	0.65	–
HD	16.5	16.8	17.1
HE	22.5	22.8	23.1
L	0.4	0.6	0.8
L1	–	1.4	–
x	–	–	0.13
y	–	–	0.1
θ	0°	–	10°
b2	–	0.35	–
l2	1.3	–	–
MD	–	14.6	–
ME	–	20.6	–

Structure of Register

Refer to the figure below as for each register.

<Example>

Processor mode register 1 (Note)

Values immediately after reset release (Note 1)

Bit attributes (Note 2)

b7	b6	b5	b4	b3	b2	b1	b0	Symbol	Address	When reset
	0	0	0	0	X	1	0	PM1	000_{16}	$00000X00_2$

Bit symbol	Bit name	Function	R	W
Reserved bit		Must always be set to “0”	○	○
Reserved bit		Must always be set to “1”	○	○
Nothing is assigned. In an attempt to write to this bit, write “0.” The value, if read, turns out to be indeterminate.			—	—
Reserved bits		Must always be set to “0”	—	○
PM17	Wait bit	0 : No wait state 1 : Wait state inserted	○	○

Note: As bit 1 of this register becomes “0” at reset, must always be set to “1” after reset release. Set bit 1 of the protect register (address $000A_{16}$) to “1” when writing new values to this register.

X : Bit in which nothing is assigned

Notes 1: Values immediately after reset release
0 ••••••••••••••••••“0” after reset release
1 ••••••••••••••••••“1” after reset release
? ••••••••••••••••••Indeterminate after reset release
X••••••••••••••••••Bit in which nothing is assigned

2: Bit attributes••••••The attributes of control register bits are classified into 3 types : read-only, write-only and read and write. In the figure, these attributes are represented as follows :

R••••••Read
○••••••Read enabled
X••••••Read disabled
—••••••Bit in which nothing is assigned (The read value is indeterminate unless otherwise mentioned.)

W••••••Write
○••••••Write enabled
X••••••Write disabled
—••••••Bit in which nothing is assigned

------Register Index------

[A]

A-D conversion interrupt control register (ADIC) 54
Address match interrupt enable register (AIER) 64
Address match interrupt register i (RMADi) .. 64
A-D register i (ADi) 152
A-D control register 2 (ADCON2) 152
A-D control register 1 (ADCON1) 151, 154, 156, 158, 160, 162
A-D control register 0 (ADCON0) 151, 154, 156, 158, 160, 161

[B]

Block control register i (BCi) 182
Bottom border control register (BB) 226
Bus collision detection interrupt control register (BCNIC) 54

[C]

Caption data register i (CDi) 12
Caption position register (CPS) 172
Chip select control register (CSR) 30
Clock control register (CS) 190
Clock prescaler reset flag (CPSRF) 84, 92
Clock run-in detect register (CRD) 173
Color palette register i (CRi) 210
Count start flag (TABSR) 82, 92

[D]

D-A control register (DACON) 165
D-A register i (DAi) 165
Data clock position register (DPS) 174
Data slicer control register 1 (DSC1) 168
Data slicer control register 2 (DSC2) 168
Data slicer interrupt control register (DSIC) .. 54
Data slicer reserved register i (DRi) 175
DMA0 request cause select register (DM0SL) 71
DMA1 request cause select register (DM1SL) 72
DMAi control register (DMiCON) 72
DMAi interrupt control register (DMiIC) 54
DMAi destination pointer (DARi) 73
DMAi transfer counter (TCRi) 73
DMAi source pointer (SARi) 73

[H]

Horizontal position register (HP) 187
HSYNC counter register (HC) 176
HSYNC counter latch 12

[I]

I^2Ci data shift register (IICiS0) 134
I^2Ci address register (IICiS0D) 135
I^2Ci status register (IICiS1) 142
I^2Ci control register (IICiS1D) 139
I^2Ci clock control register (IICiS2) 137
I^2Ci port selection register (IICiS2D) 132
I^2Ci transmit buffer register (IICiS0S) 134
I/O polarity control register (PC) 191
Interrupt control reserved register i (REiIC) 63
Interrupt request cause select register (IFSR) 63
INTi interrupt control register (INTiIC) 54

[L]

Left border control register (LB) 227

[M]

Multi-master I^2C-BUS interface i interrupt control register (IICiIC) 54

[O]

One-shot start flag (ONSF) 83
OSD control register 1 (OC1) 181
OSD control register 2 (OC2) 184
OSD control register 3 (OC3) 209
OSD control register 4 (OR4) 193
OSD reserved register i (ORi) 231
OSDi interrupt control register (OSDiIC) 54

[P]

Peripheral mode register (PM) 98
Port control register (PUR) 242
Port P0 to P5, P7, P10 register
(P0 to P5, P7, P10) 240
Port P0 to P5, P7, P10 direction register
(PD0 to PD5, PD7, PD10) 238
Port P6 register (P6) 240
Port P6 direction register (PD6) 238
Port P8 register (P8) 241
Port P9 register (P9) 241
Port P8 direction register (PD8) 239
Port P9 direction register (PD9) 239
Processor mode register 0 (PM0) 24
Processor mode register 1 (PM1) 25
Protect register (PRCR) 46
Pull-up control register 0 (PUR0) 242
Pull-up control register 1 (PUR1) 243
Pull-up control register 2 (PUR2) 243

[R]

Raster color register (RSC) 228
Reserved register i (INVCi) 97
Right border control register (RB) 227

[S]

SPRITE horizontal position register (HS) 223
SPRITE OSD control register (SC) 222
SPRITE vertical position register i (VSi) 223
System clock control register 0 (CM0) 40
System clock control register 1 (CM1) 40

[T]

Timer Ai interrupt control register (TAiIC)
..... 54
Timer Bi interrupt control register (TBiIC)
..... 54
Timer Ai register (TAi) 82
Timer Bi register (TBi) 92
Timer Ai mode register (TAiMR)
..... 81, 85, 87, 88, 89
Timer Bi mode register (TBiMR)
..... 91, 93, 94, 95
Top border control register (TB) 226
Trigger select register (TRGSR) 84

[U]

UART transmit/receive control register 2 (UCON)
..... 108
UART0 transmit/receive control register 0 (U0C0)
..... 105
UART0 transmit/receive control register 1 (U0C1)
..... 107
UART0 transmit/receive mode register (U0MR)
..... 111, 119
UART2 special mode register (U2SMR) 108
UART2 transmit/receive mode register (U2MR)
..... 104, 111, 118
UART2 transmit/receive control register 0 (U2C0)
..... 106
UART2 transmit/receive control register 1 (U2C1)
..... 107
UARTi bit rate generator (UiBRG) 103
UARTi receive buffer register (UiRB) 103
UARTi receive interrupt control register (SiRIC)
..... 54
UARTi transmit buffer register (UiTB) 103
UARTi transmit interrupt control register (SiTIC)
..... 54
Up/down flag (UDF) 83

[V]

VSYNC interrupt control register (VSYNCIC) 54
Vertical position register i (VPi) 187

[W]

Watchdog timer control register (WDC) 68
Watchdog timer start register (WDTS) 68

MITSUBISHI MICROCOMPUTERS

M306V2ME-XXXFP
M306V2EEFP

SINGLE-CHIP 16-BIT CMOS MICROCOMPUTER with CLOSED CAPTION DECODER
and ON-SCREEN DISPLAY CONTROLLER

Renesas Technology Corp.
Nippon Bldg.,6-2,Otemachi 2-chome,Chiyoda-ku,Tokyo,100-0004 Japan

Keep safety first in your circuit designs!

- Mitsubishi Electric Corporation puts the maximum effort into making semiconductor products better and more reliable, but there is always the possibility that trouble may occur with them. Trouble with semiconductors may lead to personal injury, fire or property damage. Remember to give due consideration to safety when making your circuit designs, with appropriate measures such as (i) placement of substitutive, auxiliary circuits, (ii) use of non-flammable material or (iii) prevention against any malfunction or mishap.

Notes regarding these materials

- These materials are intended as a reference to assist our customers in the selection of the Mitsubishi semiconductor product best suited to the customer's application; they do not convey any license under any intellectual property rights, or any other rights, belonging to Mitsubishi Electric Corporation or a third party.
- Mitsubishi Electric Corporation assumes no responsibility for any damage, or infringement of any third-party's rights, originating in the use of any product data, diagrams, charts, programs, algorithms, or circuit application examples contained in these materials.
- All information contained in these materials, including product data, diagrams, charts, programs and algorithms represents information on products at the time of publication of these materials, and are subject to change by Mitsubishi Electric Corporation without notice due to product improvements or other reasons. It is therefore recommended that customers contact Mitsubishi Electric Corporation or an authorized Mitsubishi Semiconductor product distributor for the latest product information before purchasing a product listed herein.
  The information described here may contain technical inaccuracies or typographical errors. Mitsubishi Electric Corporation assumes no responsibility for any damage, liability, or other loss rising from these inaccuracies or errors.
  Please also pay attention to information published by Mitsubishi Electric Corporation by various means, including the Mitsubishi Semiconductor home page (http://www.mitsubishichips.com).
- When using any or all of the information contained in these materials, including product data, diagrams, charts, programs, and algorithms, please be sure to evaluate all information as a total system before making a final decision on the applicability of the information and products. Mitsubishi Electric Corporation assumes no responsibility for any damage, liability or other loss resulting from the information contained herein.
- Mitsubishi Electric Corporation semiconductors are not designed or manufactured for use in a device or system that is used under circumstances in which human life is potentially at stake. Please contact Mitsubishi Electric Corporation or an authorized Mitsubishi Semiconductor product distributor when considering the use of a product contained herein for any specific purposes, such as apparatus or systems for transportation, vehicular, medical, aerospace, nuclear, or undersea repeater use.
- The prior written approval of Mitsubishi Electric Corporation is necessary to reprint or reproduce in whole or in part these materials.
- If these products or technologies are subject to the Japanese export control restrictions, they must be exported under a license from the Japanese government and cannot be imported into a country other than the approved destination.
  Any diversion or reexport contrary to the export control laws and regulations of Japan and/or the country of destination is prohibited.
- Please contact Mitsubishi Electric Corporation or an authorized Mitsubishi Semiconductor product distributor for further details on these materials or the products contained therein.

© 2001 MITSUBISHI ELECTRIC CORP.
New publication, effective Aug. 2001.
Specifications subject to change without notice.

RENESAS
Renesas Technology Corp.

REVISION HISTORY	M306V2ME-XXXFP, M306V2EEFP (REV.1.2) DATA SHEET

Rev. No.	Revision Description	Rev. date
1.0	First Edition of PDF File	0006
1.1	Serial I/O: 4 units. (P1)	0008
1.2	P210 Fugure 2.16.30 BEFORE → AFTER G signal output control bit: b2 b1 b0 → b6 b5 b4 B signal output control bit: b2 b1 b0 → b10 b9 b8 P251 Table 5.2.1 f_{osc} Oscillation frequency (for OSD) OSC1 Ceramic oscillating mode BEFORE → AFTER Min. 24.0 MHz → 15.0MHz Max. 25.0 MHz → 27.0MHz	0108