PART NUMBER	LED COLOR
591-2001-002	HI.EFF. RED
591-2001-007	
591-2001-013	
591-2101-002	AlGaaS RED
591-2101-007	
591-2101-013	
591-2201-002	HI.INTENSITY GREEN
591-2201-007	
591-2201-013	
591-2301-002	GREEN
591-2301-007	
591-2301-013	
591-2401-002	YELLOW
591-2401-007	
591-2401-013	
591-2601-002	BLUE
591-2601-007	
591-2601-013	
591-2701-002	AlInGaP YELLOW
591-2701-007	
591-2701-013	

LED COLOR = HI.EFF. / RED - GREEN - YELLOW

OPERATING CHARACTERISTICS AT 25°C AMBIENT

CHARACTERISTICS		MIN	TYP	MAX	UNITS	TEST CONDITIONS
LUMINOUS INTENSITY	RED	5.6	9.8	14.0	mcd	I_F = 10 mA
	GREEN	7.1	10.6	14.0		
	YELLOW	7.1	12.6	18.0		
FORWARD VOLTAGE	RED		2.0	2.5	V	I_F = 10 mA
	GREEN		2.0	2.5		
	YELLOW		2.0	2.5		
REVERSE VOLTAGE	RED		5		V	I_R = 10 µA
	GREEN		5			
	YELLOW		5			
PEAK WAVELENGTH	RED		635		nm	I_F = 10 mA
	GREEN		572			
	YELLOW		586			
DOMINANT WAVELENGTH	RED	622	628	634	nm	I_F = 10 mA
	GREEN	564	570	576		
	YELLOW	580	587	595		

LED COLOR = RED (AlGAs) GREEN (HI.INT.) YELLOW (AlInGaP)

OPERATING CHARACTERISTICS AT 25°C AMBIENT

CHARACTERISTICS		MIN	TYP	MAX	UNITS	TEST CONDITIONS
LUMINOUS INTENSITY	AlGaAS RED		23.9		mcd	I_F = 10 mA
	HI.INT. GREEN		9.1			
	AlInGaP YELLOW		33.6			
FORWARD VOLTAGE	AlGaAS RED		1.8	2.4	V	I_F = 20 mA
	HI.INT. GREEN		2.1	2.6		
	AlInGaP YELLOW		2.0	2.4		
REVERSE VOLTAGE	AlGaAS RED	5			V	I_F = 10 mA
	HI.INT. GREEN	5				
	AlInGaP YELLOW	5				
DOMINANT WAVELENGTH	AlGaAS RED		638		nm	
	HI.INT. GREEN		569			
	AlInGaP YELLOW		595			

REV.	ECN NO.	REVISIONS	DRN.	CKD.	APP.	DATE
A	——	---	---	---	---	---
B	——	---	---	---	---	---
C	——	---	---	---	---	---
D	——	REDRAWN WITH CHANGES -NEW HSG AND LENS DESIGN -ADDED NOTE 6-8 -CHANGE LED CHARACTERISTC	YY	---	NO	3-7-94
E	——	ADDED HI. GREEN AND AlInGaP YELLOW AND CHANGE TO ANOTHER AlGaAs RED CHANGE NOTE 8	AV	DC	NO	3-8-00
F	——	ADD ...2601... (BLUE) CORRECT HI.EFF. LED SPEC	AV	DC	NO	10-10-00
G	——	ADDED NOTE 10	YIS	JMC	NO	2-14-03
H	——	UPDATED LED SPEC. FOR HI.EFF. RED, GREEN & YELLOW	YIS			

LED COLOR = HI.EFF. / RED - GREEN - YELLOW

ABSOLUTE MAXIMUM RATING AT 25°C AMBIENT			UNITS
POWER DISSIPATION	RED	95	mW
	GREEN	95	
	YELLOW	95	
CONTINUOUS FORWARD CURRENT	RED	30	mA
	GREEN	30	
	YELLOW	30	
OPERATING TEMPERATURE	R-G-Y	-40 TO 100	°C
STORAGE TEMPERATURE	R-G-Y	-40 TO 100	°C

LED COLOR = RED (AlGAs) GREEN (HI.INT.) YELLOW (AlInGaP)

ABSOLUTE MAXIMUM RATING AT 25°C AMBIENT			UNITS
POWER DISSIPATION	R-G-Y	100	mW
DERATE LINEARLY FROM 25°C	AlGaAS RED	0.8	mA/°C
	HI.INT. GREEN	0.6	
	AlInGaP YELLOW	0.6	
CONTINUOUS FORWARD CURRENT	AlGaAS RED	40	mA
	HI.INT. GREEN	30	
	AlInGaP YELLOW	50	
PEAK FORWARD CURRENT (1/10 DUTY CYCLE, 0.1 ms PULSE WIDTH)	AlGaAS RED	200	mA
	HI.INT. GREEN	120	
	AlInGaP YELLOW	160	
OPERATING TEMPERATURE	R-G-Y	-55 TO 100	°C
STORAGE TEMPERATURE	R-G-Y	-55 TO 100	°C
INFRARED REFLOW SOLDERING	R-G-Y	260°C FOR 5 SEC	
VAPOR PHASE SOLDERING	R-G-Y	215°C FOR 3 MIN	

LED COLOR = BLUE

OPERATING CHARACTERISTICS AT 25°C AMBIENT

CHARACTERISTICS	MIN	TYP	MAX	UNITS	TEST CONDITIONS
LUMINOUS INTENSITY		6.0		mcd	I_F = 10 mA
FORWARD VOLTAGE		3.5	4.2	V	I_F = 10 mA
REVERSE CURRENT		0.01	10	µA	V_R = 5 V

LED COLOR = BLUE

ABSOLUTE MAXIMUM RATING AT 25°C AMBIENT		UNITS
POWER DISSIPATION	100	mW
DERATE LINEARLY FROM 55°C	0.44	mA/°C
CONTINUOUS FORWARD CURRENT	20	mA
OPERATING TEMPERATURE	-40 TO 100	°C
STORAGE TEMPERATURE	-40 TO 100	°C
SOLDER PROFILE: IR 235°C PEAK FOR 15 sec / 185°C FOR 90 sec MAX		

LED SCHEMATIC

TAPING SPECIFICATION

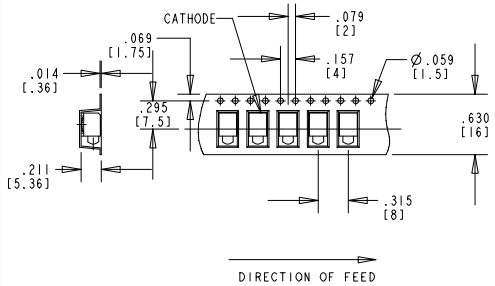

TOLERANCE: .004 UNLESS OTHERWISE SPECIFIED

MILLIMETER DIMENSIONS SHOWN FOR REFERENCE ONLY

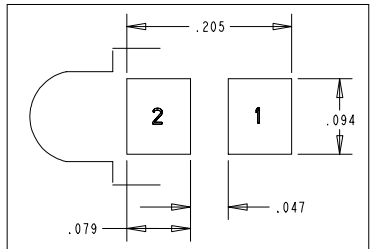

COMPONENT SIDE

RECOMMENDED PC BOARD LAND PATTERN

(DIM'S ±.004)

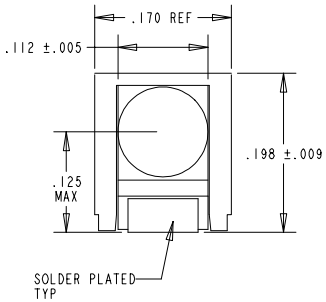

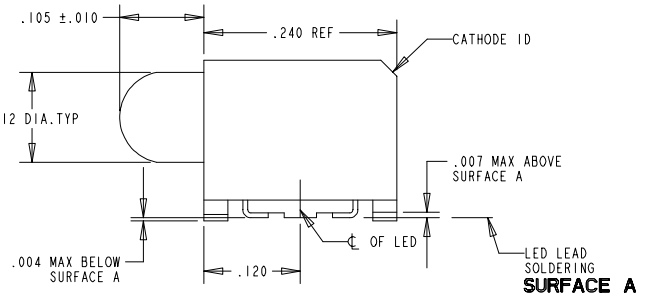

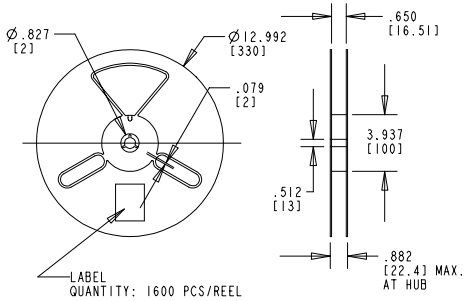

13 INCH DIA. REEL SPECIFICATIONS

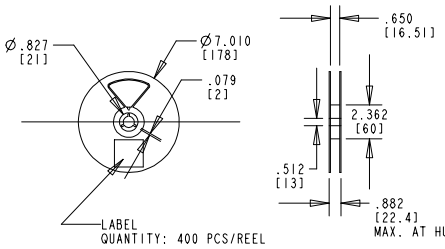

7 INCH DIA. REEL SPECIFICATIONS

NOTES :

1- MILLIMETER DIMENSIONS SHOWN FOR REFERENCE ONLY
2- PAD NUMBERS ARE FOR REFERENCE ONLY , DESIGNATION NON-EXISTENT ON PART
3- STORAGE CONDITIONS FOR TAPED PRODUCT: RE-TAPING MAY BE NECESSARY FOR PRODUCTS STORED MORE THAN TWELVE MONTHS
4- ORDER QUANTITY IS LED ASSEMBLIES , NOT REELS
5- ...-002 SUFFIX MEANS PARTS ARE PACKED ON A 20 pc SAMPLE STRIP
...-007 SUFFIX MEANS PARTS ARE PACKED ON A 7 INCH REEL , 400 pcs/REEL
...-013 SUFFIX MEANS PARTS ARE PACKED ON A 13 INCH REEL , 1600 pcs/REEL
6- LENS MOVEMENT IN RELATIONSHIP TO THE HOUSING IS:
.009" T.I.R. VERTICALLY
.007" T.I.R. HORIZONTALLY
7- FRONT AND REAR TERMINALS OF THE ASSEMBLY TO BE WITHIN .005 COPLANARITY
8- LED LEAD FRAME MATERIAL:
CORE MATERIAL = COPPER
1st PLATING = Ag-100% , THICKNESS ABOUT 90 MICRO-INCH
2nd PLATING = 90% Sn - 10% Pb , THICKNESS RANGE 200 to 800 MICRO-INCH
9- DIALIGHT PART NUMBERS =
591-2x01-002 591-2x01-007 591-2x01-013
10. DEVICE HAS A MOISTURE SENSITIVITY LEVEL "2" CAUTION
LABEL APPLIED AS PER JEDEC STD. 033

THIS DRAWING AND THE CONTENTS HEREIN ARE CONFIDENTIAL AND THE SOLE PROPERTY OF DIALIGHT. REPRODUCTION OF THIS DRAWING OR CONSTRUCTION OF ANY PARTS WITHIN THIS DRAWING ARE FORBIDDEN WITHOUT THE WRITTEN CONSENT OF DIALIGHT.

SCALE 8:1

ALL DIM'S IN: INCHES

TOLERANCES: UNLESS OTHERWISE SPECIFIED

FRACTIONS: ±1/64
DECIMALS (.XX): ±.020
DECIMALS (.XXX): ±.015
DECIMALS (.XXXX):
ANGLES: ±3°

FINISH:

FSCM 83330

DRAWING NUMBER C-15636

REV H

TITLE SURFACE MOUNT CB1 - ROUND LENS

MATERIAL

Dialight

1501 ROUTE 34 SOUTH
FARMINGDALE, NJ 07727

SHEET OF

FAMILY TABLES: