THIS DRAWING IS UNPUBLISHED. RELEASED FOR PUBLICATION -,- .
© COPYRIGHT - By - ALL RIGHTS RESERVED.

LOC	DIST
FT	0

REVISIONS

P	LTR	DESCRIPTION	DATE	DWN	APVD
	P	REVISED PER ECO-11-004917	11MAR11	RK	HMR

MATERIALS:
HOUSING: POLYAMIDE, BLACK, UL94V-0.
TERMINALS: COPPER ALLOY, TIN PLATE.
SCREWS: ZINC PLATED, STEEL WITH CLEAR CHROMATE.

ELECTRICAL:
RATING: 25A, 300V.
WIRE RANGE: 12-22 AWG.

MECHANICAL:
MAXIMUM TORQUE RATING: 7 IN-LBS.

1 OBSOLETE PARTS: OBSOLETE CIS STREAMLINING PER D.RENAUD/D.SINISI

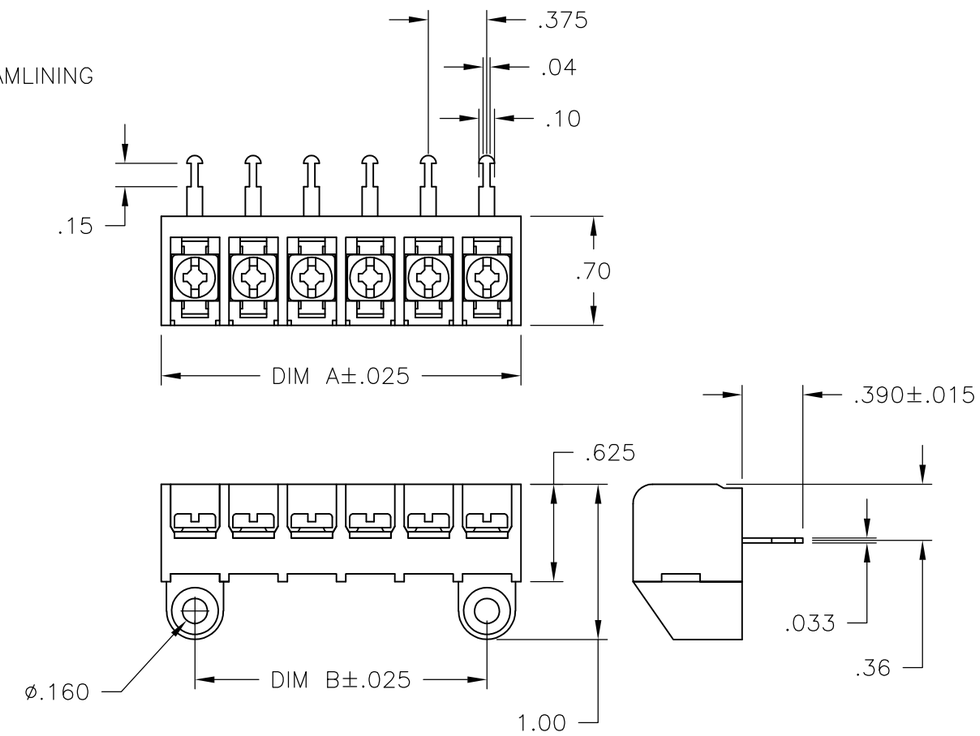

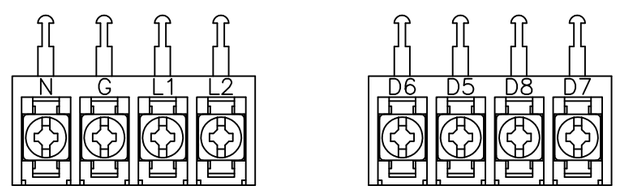

~~9-1546158-1~~ 1 9-1546158-2

DIM. "B"	DIM. "A"	NO. OF POS.	CATALOG NUMBER	PART NO.
10.875	11.311	30	6STR-30-006	1546816-2
10.500	10.936	29	6STR-29-006	1546816-1
10.125	10.561	28	6STR-28-006	2-1546174-0
9.750	10.186	27	6STR-27-006	1-1546174-9
9.375	9.811	26	6STR-26-006	1-1546174-8
9.000	9.436	25	6STR-25-006	1-1546174-7
8.625	9.061	24	6STR-24-006	1-1546174-6
8.250	8.686	23	6STR-23-006	1-1546174-5
7.875	8.311	22	6STR-22-006	1-1546174-4
7.500	7.936	21	6STR-21-006	1-1546174-3
7.125	7.561	20	6STR-20-006	1-1546174-2
6.750	7.186	19	6STR-19-006	1-1546174-1
6.375	6.811	18	6STR-18-006	1-1546174-0
6.000	6.436	17	6STR-17-006	1546174-9
5.625	6.061	16	6STR-16-006	1546174-8
5.250	5.686	15	6STR-15-006	1546174-7
4.875	5.311	14	6STR-14-006	1546174-6
4.500	4.936	13	6STR-13-006	1546174-1
4.125	4.561	12	6STR-12-006	1546174-5
3.750	4.186	11	6STR-11-006	1546174-4
3.375	3.811	10	6STR-10-006	1546174-3
3.000	3.436	9	6STR-09-006	1546174-2
2.625	3.061	8	6STR-08-006	9-1546158-7
2.250	2.686	7	6STR-07-006	9-1546158-5
1.875	2.311	6	6STR-06-006	6-1437654-7
1.500	1.936	5	6STR-05-006	9-1546158-3
SEE FIG	1.125	1.561	4	6STR-04-392	9-1546158-2
SEE FIG 1 OBSOLETE	1.125	1.561	4	6STR-04-263	~~9-1546158-1~~
	1.125	1.561	4	6STR-04-006	6-1437654-1
	.750	1.186	3	6STR-03-006	5-1437654-6
	.375	.811	2	6STR-02-006	5-1437654-3

THIS DRAWING IS A CONTROLLED DOCUMENT.

DIMENSIONS: INCHES

TOLERANCES UNLESS OTHERWISE SPECIFIED:
0 PLC ± -
1 PLC ± -
2 PLC ± .02
3 PLC ± .010
4 PLC ± -
ANGLES ± 1°

MATERIAL -
FINISH -

DWN S SCHLEGEL 8/5/05
CHK S YODER 8/5/05
APVD S YODER 8/5/05
PRODUCT SPEC —
APPLICATION SPEC —
WEIGHT —

CUSTOMER DRAWING

TE Connectivity

NAME 6STR-XX-006

SIZE	CAGE CODE	DRAWING NO	RESTRICTED TO
A3	00779	C-5-1437654-3	—

SCALE NTS SHEET 1 OF 1 REV P