4 POLE

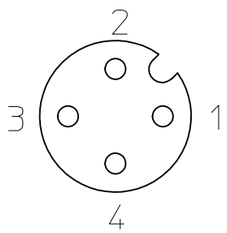

Pin	Kolor przew.	Wire color
1	BRAZOWY	BN
2	BIALY	WH
3	NIEBIESKI	BU
4	CZARNY	BK

PART No MATRIX

8	0	4	0	P	1	X	X	X	M	X	X	X	X	X

- 8=Micro Change
- 0=Portable
- 5=5 Pin
- 0P1 = PNP female 90°
- See table of cable types
- M=Metres, F=Feet
- LENGTH: 020=2 METRES, 050=5 METRES, 200=20 METRES
- OPTIONS: Coupling Nut Material: Blank=Standard, 1=Stainless Steel, 5=Delrin
- Blank=Yellow PUR (Standard), A=Grey, G=Black

Cable		Coupling Nut Material	Overmould
Exx	PVC	Nickel Plated Brass	PUR
H0x	LSOH PUR	Nickel Plated Brass	PUR
H52	LSOH PUR	Teflon Coated Brass	PUR
I0x	CEI, UNBRAIDED	Nickel Plated Brass	PUR
I2x	CEI, BRAIDED	Teflon Coated Brass	PUR
Lxx	PUR	Nickel Plated Brass	PUR
Mxx	PUR/PVC	Nickel Plated Brass	PUR
Pxx	PUR	Nickel Plated Brass	PUR
P8x	PUR, IRRADIATED	Teflon Coated Brass	PUR
S2x	SJTO TYPE PVC	Teflon Coated Brass	PUR

Table of lenght tolerances/ Tablica tolerancji dlugosci mm		
Over/Od	Up to and including/ Do-wlacznie	Tolerance/Tolerancja +
0	305	+19
305	915	+45
915	1830	+56
1830	3660	+89
3660	7320	+165
7320	14640	+317
14640	30500	+622
30500		+2% of lenght/dlugosci

TABELA 1
CHART 1

MOLEX P/N	WOODHEAD NO	L[MM]
1200060611	8040P1E03M050	5000
1200060618	8040P1P03M020	2000
1200675005	8040P1A09M050	5000
1200675014	8040P1E03M020	2000
1200675015	8040P1E03M030	3000
1200675016	8040P1P03M050	5000
1200675017	8040P1P03M100	10000
1200675018	8040P1S20M050	5000
1200675019	8040P1S20M1001	10000
1200675023	8040P1S20M100	10000
1200675024	8040P1S20M040H	4000
1200675033	8040P1E85M050	5000
1200675064	8040P1E85M020	2000
1200675073	8040P1E03M100	10000
1200675074	8040P1S20M2001	20000
1200675086	8040P1S20M030	3000
1200678008	8040P1H09M050H	5000
1200678009	8040P1H09M100H	10000
1200678010	8040P1S20M010	1000
1200678011	8040P1P82M200	20000
1200678044	8040P1I03M020	2000
1200678045	8040P1I03M030	3000
1200678046	8040P1P03M150	15000
1200678047	8040P1P82M050	5000
1200678048	8040P1P82M0507	5000
1200678049	8040P1P82M100	10000
1200678050	8040P1P82M1007	10000
1200678051	8040P1S20M020H	2000
1200678052	8040P1S20M050H	5000
1200678053	8040P1S20M100H	10000
1200678148	8040P1H52M100	10000
1200678149	8040P1P03M030H	3000
1200678150	8040P1P03M050H	5000
1200678151	8040P1P03M100H	10000
1200678184	8040P1I03M150	15000
1200678189	8040P1P09M100	10000
1200678196	8040P1P82M020	2000
1200678201	8040P1S20M020	2000
1200670259	8040P1A09M100	10000
1200670292	8040P1I03M100	10000
1200678258	8040P1E03M150	15000
1200678265	8040P1S20M200	20000
1200651777	8040P1P03M030	3000

SCHEMAT POLACZEN
WIRING SCHEMATIC

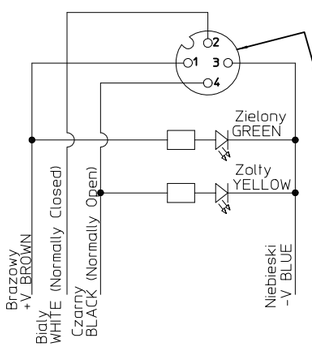

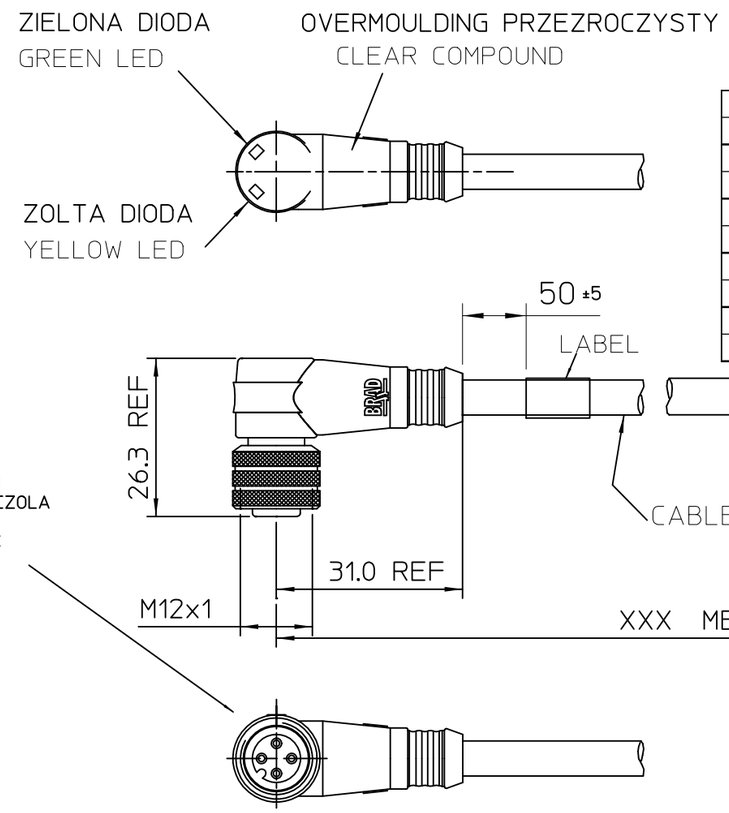

UWAGI:

1. DLUGOSCI CIECIA I SPECYFIKACJE NABIJANIA WG LISTY CIECIA.

NOTES:

1. CUTTING LENGHT AND CRIMPING SPECIFICATION IN CUTTING LIST.

ORIGINAL RELEASE
EC NO: 2008/07/28
DRWN:KOTYPKO
CH'KD:
APPR:
A
DESCRIPTION
REV

QUALITY SYMBOLS
▼=0
▽(C)=0

GENERAL TOLERANCES (UNLESS SPECIFIED)	mm	INCH
4 PLACES	±	±
3 PLACES	±	±
2 PLACES	±	±
1 PLACE	±	±
ANGULAR ± °		

DRAFT WHERE APPLICABLE MUST REMAIN WITHIN DIMENSIONS

DIMENSION STYLE: MM ONLY
SCALE: ---
DESIGN UNITS: METRIC
FIRST ANGLE PROJECTION

DRAWN BY: KOTYPKO DATE: 2008/07/28
CHECKED BY: DATE:
APPROVED BY: DWARWAS DATE: 2008/07/28
MATERIAL NO.: SEE CHART 1

TITLE: MMC-4P-LED.PNP-90-xM-xxxx

molex MOLEX INCORPORATED

DOCUMENT NO.: 8040P1xxxMxxxx
SHEET NO.: 1 OF 1
SIZE: A3

THIS DRAWING CONTAINS INFORMATION THAT IS PROPRIETARY TO MOLEX INCORPORATED AND SHOULD NOT BE USED WITHOUT WRITTEN PERMISSION