THIS DRAWING IS UNPUBLISHED. RELEASED FOR PUBLICATION -,- .
© COPYRIGHT - By - ALL RIGHTS RESERVED.

REVISIONS

P	LTR	DESCRIPTION	DATE	DWN	APVD
	AC7	REVISED PER ECO-17-007248	22MAY2017	NK	DH

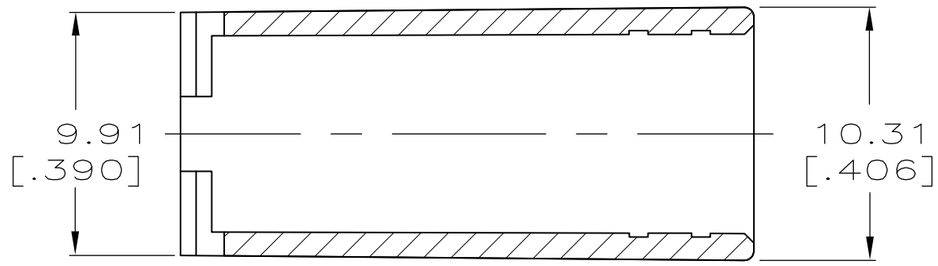

SECTION B-B

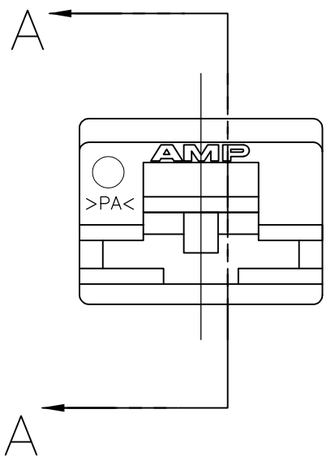

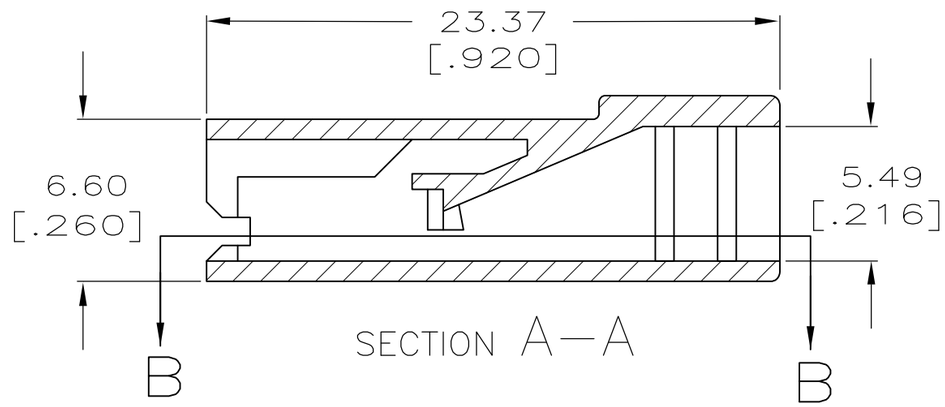

SECTION A-A

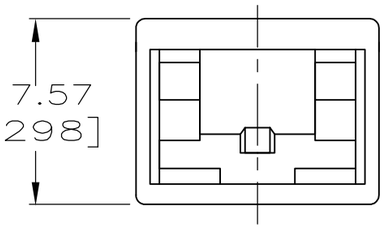

1. SPECIAL PACKAGING QUANTITIES.
2. POLYAMIDE ACCORDING TO IEC 60335-1, GLOW WIRE.
3. PRELIMINARY - NOT FOR PRODUCTION

5 CONTACT PRODUCT ENGINEERING FOR TERMINAL RECOMMENDATIONS WHEN USING THIS INSULATOR WITH 10 AWG WIRE

FINISH	MATERIAL	PART NO
NATURAL	66 NYLON, UL94 V0 150C	3 2-480416-4
NATURAL	2 66 NYLON, UL94 V0	3 2-480416-3
NATURAL	2 UL94 V2	2-480416-2
NATURAL	6/6 NYLON	3 1 2-480416-1
NATURAL	UL94 5VA RATED	3 2-480416-0
NATURAL	4/6 NYLON UL 150	1-480416-8
NATURAL	66 NYLON, VO	1-480416-7
~~NATURAL~~	~~POLYESTER~~	~~1-480416-6~~
~~RED~~	6/6 NYLON	~~1-480416-4~~
~~BLUE~~		~~1-480416-3~~
BLACK		1-480416-1
NATURAL		1-480416-0

SUPERCEDED BY 1-480416-0 — OBSOLETE
SUPERCEDED BY 1-480416-0

THIS DRAWING IS A CONTROLLED DOCUMENT.

DIMENSIONS: mm [INCHES]

TOLERANCES UNLESS OTHERWISE SPECIFIED:
0 PLC ± -
1 PLC ± -
2 PLC ± 0.38 [.015]
3 PLC ± -
4 PLC ± -
ANGLES ± -

MATERIAL: SEE TABLE
FINISH: SEE TABLE

DWN JR RUTH 2/4/91
CHK P FORTNEY 2/4/91
APVD C MEYERS 2/4/91
PRODUCT SPEC —
APPLICATION SPEC —
WEIGHT 0.000000

TE Connectivity

NAME: HOUSING, RECEPTACLE, FASTON, 6.35 [.250] SERIES

SIZE A3 | CAGE CODE 00779 | DRAWING NO C-480416 | RESTRICTED TO —

CUSTOMER DRAWING | SCALE 4:1 | SHEET 1 OF 1 | REV AC7