DEGSON ELECTRONICS CO., LTD.

Product Specificatio

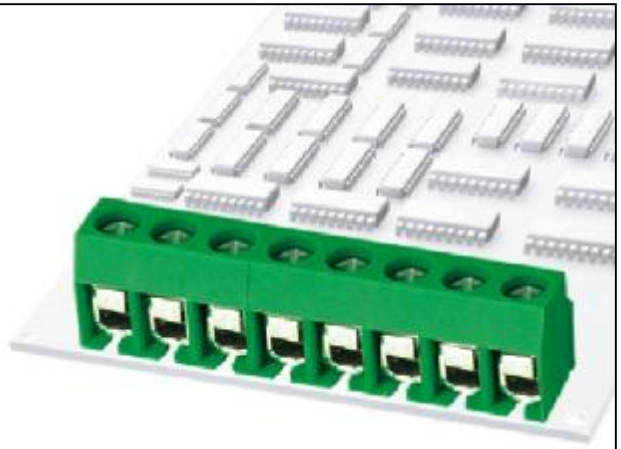

DG126-5.0

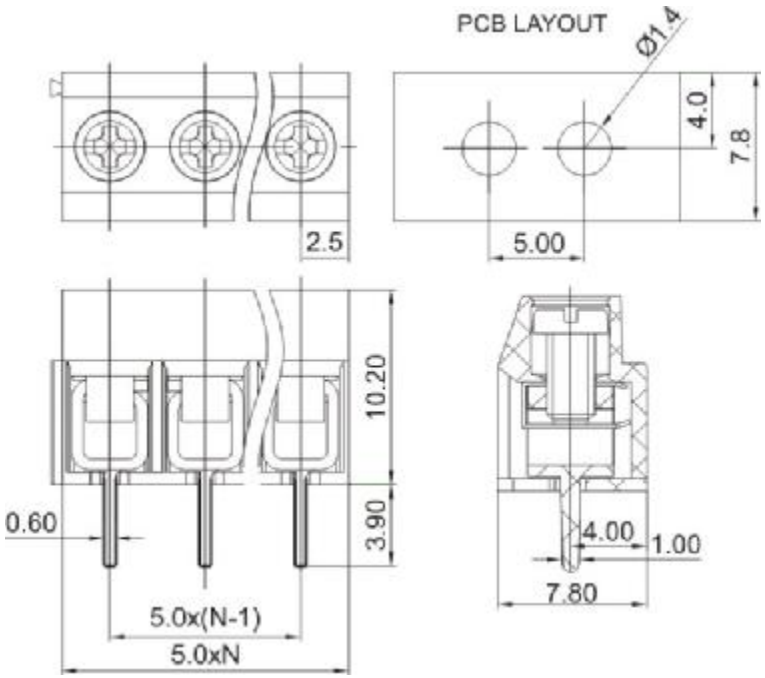

APPROVAL		
Electrical		
Standard	**UL**	**IEC**
Rated voltage	300V	250V
Rated current	10A	18A
Wire range	26-14AWG	0.5-2.5mm^2
Withstanding voltage	AC2000V/1Min	
Menchanical		
torque	0.4Nm(3.5Lb-In)	
Ambient temperature	-40℃~+105 ℃	
Strip length	6-7mm	
Dimensions		
pitch	5.0mm(.197″)	
Poles	2P,3P-24P	
Material		
Housing	PA66,UL94V-0	
Screws	M2.5,steel, Cr^{3+}Znplated	
Pin header	Brass,Tin plated	
Wire guard	Strainless steel	

HOW TO ORDER :

[ ] – [ ][ ] P – 1 [ ] – X X X

Customer Request

Series number

No.of pole

1	Single pitch
2	Double pitch

Color

1	Grey	4	Green	7	Trans Parent
2	Blue	5	Orange	8	Yellow
3	Black	6	Red	9	White

mm (INCH)	DEGSON ELECTRONICS CO., LTD.
THIROANGLE PROJECTION	NAME DG126-5.0