THIS DRAWING IS UNPUBLISHED. RELEASED FOR PUBLICATION -,- .
© COPYRIGHT - By - ALL RIGHTS RESERVED.

LOC	DIST
AF	50

REVISIONS

P	LTR	DESCRIPTION	DATE	DWN	APVD
	D1	REVISED PER ECO 13-003180	23FEB13	JR	PD

1 CONTINUOUS STRIP ON REELS.

2 WIRE SIZE 0.3-0.9mm2 [22-18] AWG

3 INSULATION RANGE IS 1.52-2.54 [.060-.100] DIA.

4 MATING TAB THK IS 0.81±0.025 [.032±.001]

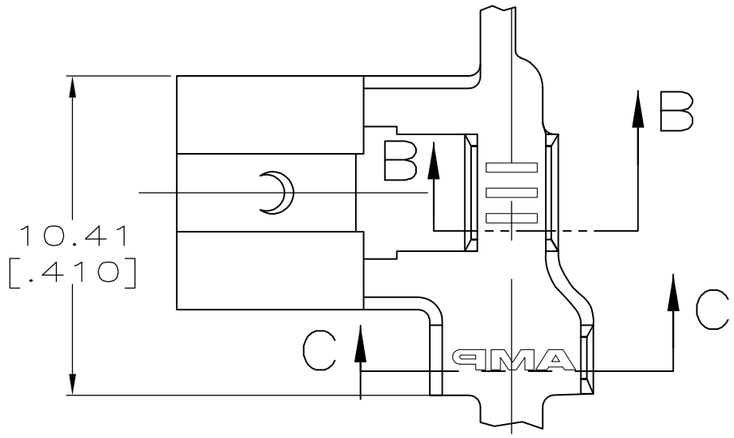

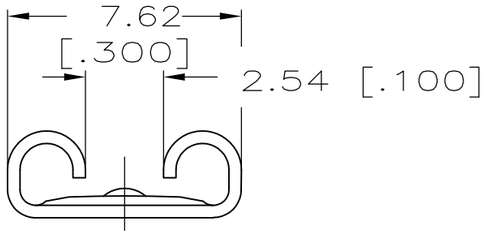

VIEW A-A

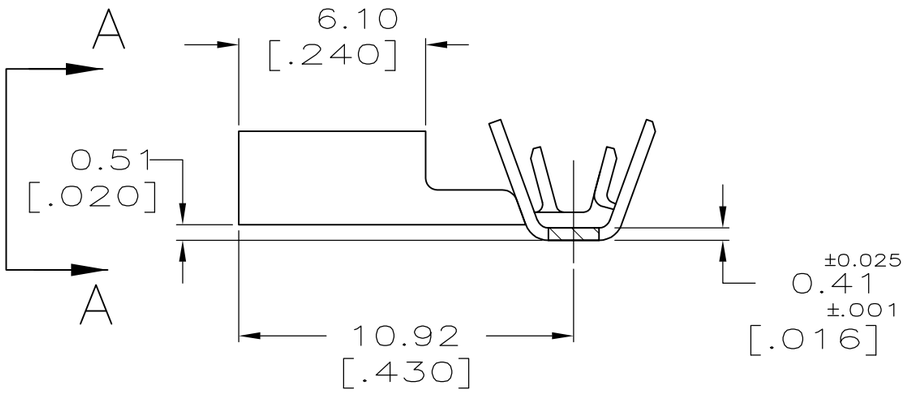

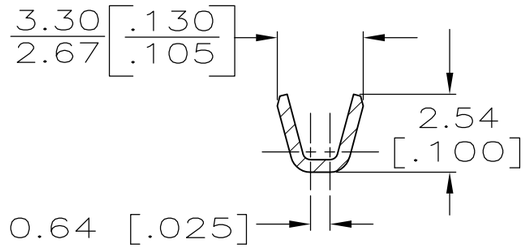

SECTION B-B

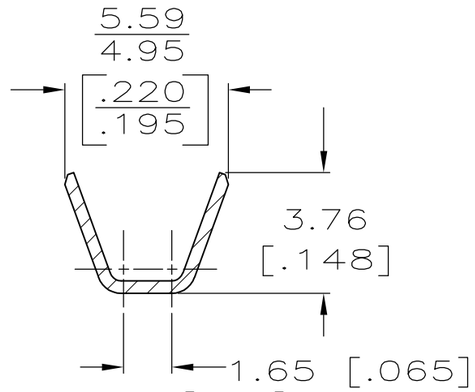

SECTION C-C

NICKEL	CR STEEL	62813-3
TIN	BRASS	62813-2
-	BRASS	62813-1
FINISH	FINISH	PART NO.

THIS DRAWING IS A CONTROLLED DOCUMENT.

DIMENSIONS: mm [INCHES]

TOLERANCES UNLESS OTHERWISE SPECIFIED:

0 PLC	± -
1 PLC	± -
2 PLC	± -
3 PLC	± 0.38 [.015]
4 PLC	± -
ANGLES	± -

MATERIAL: SEE TABLE

FINISH: SEE TABLE

DWN	JR RUTH	4/8/91
CHK	MS FEHER	4/8/91
APVD	R KUZO	4/8/91
PRODUCT SPEC	—	
APPLICATION SPEC	—	
WEIGHT	—	

TE Connectivity

NAME: RECEPTACLE, FASTON, FLAG, 6.35 [.250] SERIES

SIZE	CAGE CODE	DRAWING NO	RESTRICTED TO
A3	00779	C-62813	—

CUSTOMER DRAWING

SCALE	SHEET	REV
5:1	1 OF 1	D1