THIS DRAWING IS UNPUBLISHED. RELEASED FOR PUBLICATION - ,N/A .
© COPYRIGHT N/A By - ALL RIGHTS RESERVED.

LOC	DIST
—	—

REVISIONS

P	LTR	DESCRIPTION	DATE	DWN	APVD
	U	REV PER ECO 15-016251	11-12-15	CT	CD

1. THIS RECEPTACLE WILL MATE WITH ANY 24C7, SIZE 5 PLUG IN AMPLIMITE SERIES.
2. MAXIMUM WIRE INSULATION TO BE USED WITH THIS RECEPTACLE IS ø.068.
3. THIS CONNECTOR ACCEPTS (7) POWER 8, OR COAX SOCKET CONTACTS IN POSITIONS A1 THRU A7, PURCHASED SEPARATELY.
4. THIS CONNECTOR ACCEPTS SIZE 20 SOCKET CONTACTS IN POSITIONS 1 THRU 17, PURCHASED SEPARATELY.

5. UL/CSA DESIGNATION STAMPED IN THIS AREA, OPTIONAL.
6. MATERIAL: STEEL PER ASTM-A-109.
7. MATERIAL: BRASS PER MIL-C-50 AND ASTM-B-36 UNS NO. C26000.
8. FINISH: TIN PER ASTM-B-545 .000400 MIN THK OVER COPPER PER AMS2418 .000050 MIN THK.
9. FINISH: CADMIUM PLATED PER QQ-P-416.
10. FINISH: GOLD PER MIL-G-45204 TYPE II, GRADE C, CLASS 1 OVER COPPER PER MIL-C-14550, CLASS IV.
11. INK STAMP WESTINGHOUSE PART NO. 97942-645A935H03, FAR SIDE.
12. FINISH: ZINC PLATE PER ASTM-B-633, .000200-.000400 THK WITH SUPPLEMENTARY CHROMATE (Cr3+)

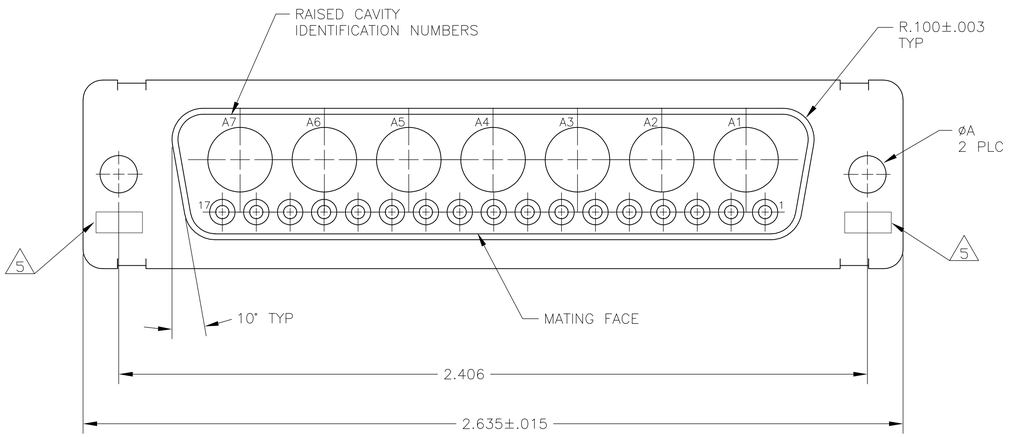

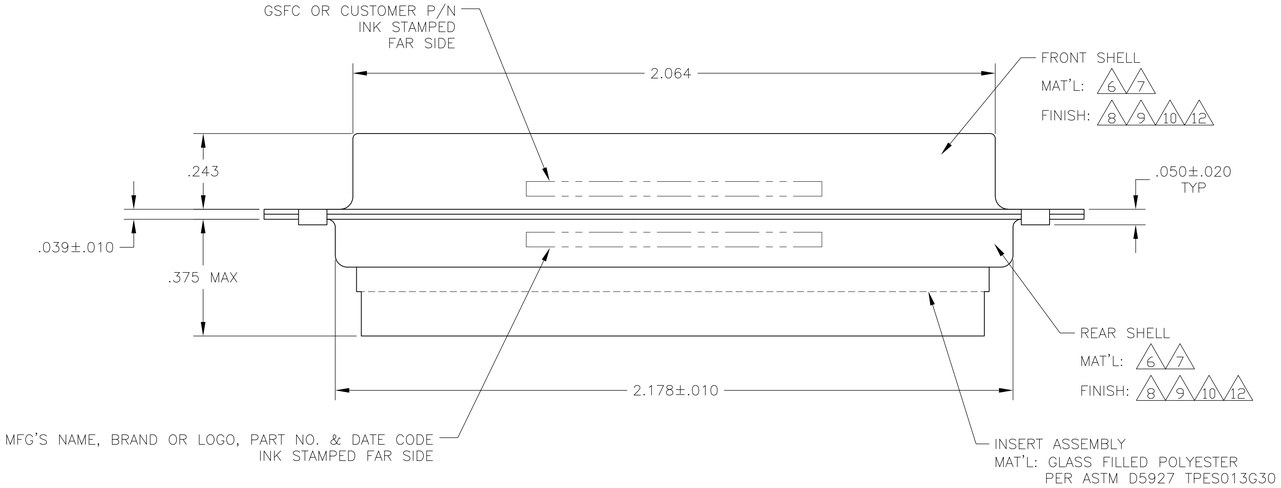

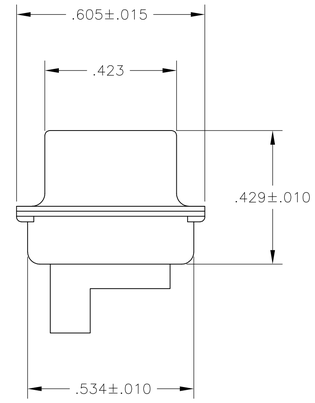

6 8	.120	-	5-208552-4
6 12	.120	-	5-208552-1
6 9	.120	T5935-0103-006	208552-7
6 8	.120	-	208552-6
7 10	.154	311P405-22S-B-15	208552-5
6 8	.120	-	208552-4
6 9 11	.120	97942-645A935H03	208552-3
7 10	.120	311P405-22S-B-12	208552-2
6 9	.120	-	208552-1
REMARKS	øA	CUSTOMER PART NO.	PART NO.

THIS DRAWING IS A CONTROLLED DOCUMENT.

DIMENSIONS: INCHES

TOLERANCES UNLESS OTHERWISE SPECIFIED:
0 PLC ± -
1 PLC ± -
2 PLC ± -
3 PLC ± .005[0.13]
4 PLC ± -
ANGLES ± 0°30'

MATERIAL -
FINISH -

DWN T. SHUEY 07-JAN-88
CHK A.EMADI 27-JAN-88
APVD A.EMADI 27-JAN-88
PRODUCT SPEC —
APPLICATION SPEC —
WEIGHT —

TE Connectivity

NAME
RECEPTACLE ASSEMBLY
AMPLIMITE 24C7
SIZE 5, COAX MIX

SIZE	CAGE CODE	DRAWING NO	RESTRICTED TO
A1	00779	C-208552	—

CUSTOMER DRAWING | SCALE 4:1 | SHEET 1 OF 1 | REV U

4805 (3/11)