DUAL ENTRY SOLENOID KEY OPERATED SAFETY INTERLOCK NOMENCLATURE

GK ___ ___ ___ ___ ___ ___ ___ ___

BODY / INDICATOR		CONDUIT / SEAL		BASIC 11		HEAD		KEY		TYPE / OVER-RIDE		SOLENOID VOLTAGE		MODIFICATION CODE 20
L	HEAD TO LEFT - WITH INDICATORS	A	1/2 NPT - VITON SEALS	2	2 SNAP ACTION DPDT	L	OPENING TO FRONT AND TOP	6	STRAIGHT	A	SOLENOID UNLOCK WITH SCREWDRIVER	1	12 VDC	F04
R	HEAD TO RIGHT - WITH INDICATORS	B	PG 13.5 - VITON SEALS	3	2 SLOW ACTING SPDT BBM	M	OPENING TO RIGHT AND TOP	7	90 DEGREE		SLOT OVER-RIDE	2	24 VDC	F05
F	HEAD TO LEFT - WITHOUT INDICATORS	C	20 MM - VITON SEALS	6	SLOW ACTING 2 NC	N	OPENING TO BACK AND TOP	8	UP - DOWN, SPRING LOADED	B	SOLENOID UNLOCK WITHOUT OVER-RIDE	3	48 VDC	FW
G	HEAD TO RIGHT - WITHOUT INDICATORS	D	PF 1/2 - VITON SEALS	10	SLOW ACTING 4 NC	P	OPENING TO LEFT AND TOP	9	SIDE - SIDE, SPRING LOADED	S	SOLENOID LOCK WITH SCREWDRIVER	4	120 VAC	
		E	1/2 NPT - BUNA-N SEALS	12	SLOW ACTING 2 NC - 1 NO BBM			X	NO KEY		SLOT OVER-RIDE	6	240 VAC	
		F	PG 13.5 - BUNA-N SEALS	14	SLOW ACTING 2 NC - 2 NO BBM					T	SOLENOID LOCK WITHOUT OVER-RIDE			
		G	20 MM - BUNA-N SEALS	15	SLOW ACTING 2 NC - 2 NO BBM - GOLD									
		H	PF 1/2 - BUNA-N SEALS	16	SLOW ACTING 3 NC - 1 NO BBM									
				30	2 SLOW ACTING 4 NC - GOLD									
				32	2 SLOW ACTING 2 NC - 1 NO BBM - GOLD									
				34	2 SLOW ACTING 2 NC - 2 NO BBM - GOLD									
				36	2 SLOW ACTING 3 NC - 1 NO BBM - GOLD									
				40	2 SLOW ACTING 4 NC									
				42	2 SLOW ACTING 2 NC - 1 NO BBM									
				44	2 SLOW ACTING 2 NC - 2 NO BBM									
				46	2 SLOW ACTING 3 NC - 1 NO BBM									

NOTES

1 - ZINC DIECAST BODY AND HEAD WITH STEEL COVER. BODY, HEAD AND COVER FINISHED WITH EPOXY PAINT

2 - PROVIDED WITH PLASTIC SNAP FIT COVER TO PLUG UNUSED KEY ENTRY WINDOW

3 THE LEFT INDICATOR IS GREEN AND THE RIGHT INDICATOR IS RED. NOT PRESENT ON BODY/INDICATOR CODES F OR G

4 - MAXIMUM OPERATING FREQUENCY (Fmax) = 100 OPS/MIN

5 - INSERTION FORCE = 35 N
8 LB
EXTRACTION FORCE = 28 N
6 LB
MAXIMUM SOLENOID LOCKING FORCE = 1000 N
224 LB

6 ROTATE 1/4 TURN CLOCKWISE TO UNLOCK DEVICES WITH HEAD TO LEFT, SOLENOID UNLOCK AND DEVICES WITH HEAD TO RIGHT, SOLENOID LOCK. ROTATE 1/4 TURN COUNTERCLOCKWISE TO UNLOCK DEVICES WITH HEAD TO LEFT, SOLENOID LOCK AND DEVICES WITH HEAD TO RIGHT, SOLENOID UNLOCK. NOT PRESENT ON TYPE/OVER-RIDE CODES B OR T

7 SWITCH MUST OPERATE BEFORE REACHING MINIMUM INSERTION DISTANCE

8 - T-15 TAMPERPROOF TORX DRIVER BIT PROVIDED

9 ELECTRICAL RATINGS ARE FOR BASIC SWITCHES

10 - MINIMUM SOLENOID VOLTAGE = 80% DC / 85% AC OF RATED VOLTAGE
MAXIMUM SOLENOID VOLTAGE = 110% OF RATED VOLTAGE
SOLENOID POWER = 12 WATTS NOMINAL

11 SEE PAGES 10, 11, 12 AND 13 FOR CIRCUIT DIAGRAMS

12 - NO CHANGES CAN BE MADE TO THIS DRAWING WITHOUT JOINT FREEPORT / NEWHOUSE APPROVAL

13 THE LEFT INDICATOR IS YELLOW AND THE RIGHT INDICATOR IS RED

15 10-PIN CONNECTOR, BRAD HARRISON PART NO.3R1006AZIF010 OR EQUIVALENT

16 4-PIN CONNECTOR, WOODHEAD PART NO.80599-19 OR MOLEX PART NO.0863IMZI OR EQUIVALENT

17 5-PIN CONNECTOR, BRAD HARRISON PART NO.41310 OR EQUIVALENT

18 CONNECTOR INSTALLED IN BOTTOM CONDUIT HOLE

19 CONNECTOR INSTALLED IN SIDE CONDUIT HOLE

20 FOR CONNECTOR AND CIRCUIT DETAILS OF MODIFICATION CODE, REFER PAGE 14 FOR CODE F05, PAGE 15 FOR CODE FW AND PAGE 16 FOR CODE F04

ELECTRICAL RATING 9				ENVIRONMENTAL RATINGS	APPROVALS
AC		DC		IP68 NEMA 1, 4, 6P, 12 & 13	UL, CSA, CE
A300	AC 15	Q300	DC 13	TEMP RANGE -25°C TO 40°C	
Ue	Ie	Ue	Ie	-13°F TO 104°F	
(VOLTS)	(AMPS)	(VOLTS)	(AMPS)	STORAGE -40°C TO 120°C	
120	6	24	2.9	-40°F TO 248°F	
240	3	125	.55	SHOCK: 50G PER IEC 68-2-27	
		250	.27	VIBRATION: 10G PER IEC 68-2-6	IEC 947-5-1 EN60947-5-1
Ith = 10 A					

ANSI Y14.5M-1982 APPLIES

THIS DRAWING COVERS A PROPRIETARY ITEM AND IS THE PROPERTY OF MICRO SWITCH. A DIVISION OF HONEYWELL. THIS DRAWING IS NOT TO BE COPIED OR USED WITHOUT THE APPROVAL OF MICRO SWITCH.

FED. MFG. CODE 91929
MICROSWITCH a Honeywell Division

SWITCH - DOOR INTERLOCK

CATALOG LISTING
GK SERIES CHART 4

THIRD ANGLE PROJECTION

SCALE NTS

DO NOT SCALE PRINT

TOLERANCES
APPLY TO DESIGN UNITS. CONVERSIONS ARE ONLY FOR REFERENCE. UNLESS NOTED, TOLERANCES ARE :

	DIM. mm	TOL. mm.	DIM. in	TOL. in.
NO PLACES	X	±1.0	X	±0.03
ONE PLACE	X.X	±0.08	X.X	±0.015
TWO PLACES	X.XX	±0.127/.006	X.XX	±0.127/.005
THREE PLACES			X.XXX	±0.005
ANGLES				

DESIGN UNITS: SI METRIC [X] US CUSTOMARY [ ]

WEIGHT 1.5 kg / 3.3 LB

PTC/CAD 3D
DRAWN MAM 29SEP98 | CHECK CMH 11MAY99 | CHECK PRS 04FEB09 | CHECK CMH 10NOV11 | ISSUE 32154 | DRAWING NUMBER | M GK SERIES CHART 4 | PAGE 1 OF 16 | RELEASE NO. PR-23758 | REPLACES -

REVISIONS
N 0047583 SSR 04FEB09
P 0065737 PRS 11MAY10
R 0083578 MENT 10NOV11

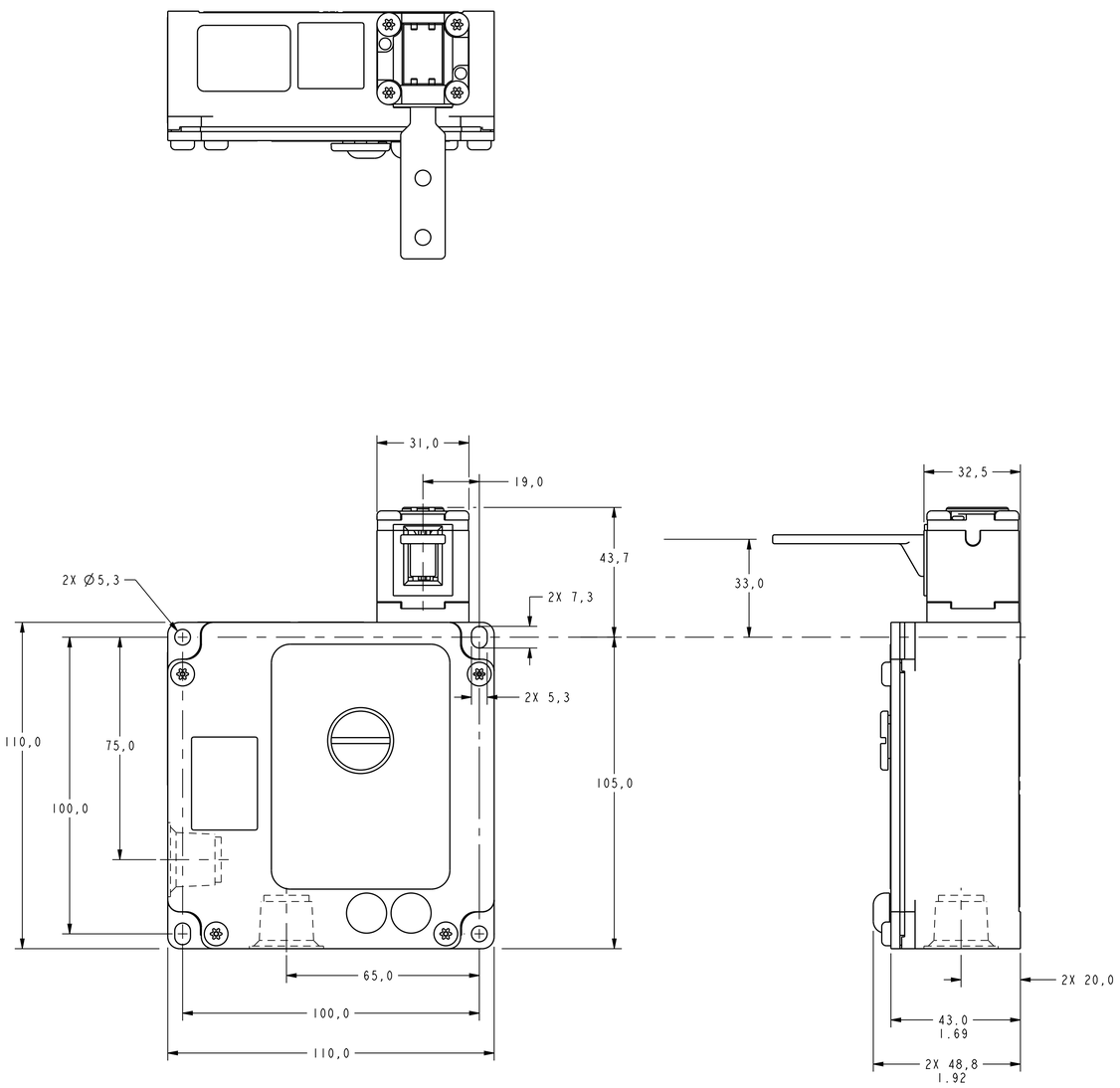

FRONT KEY ENTRY

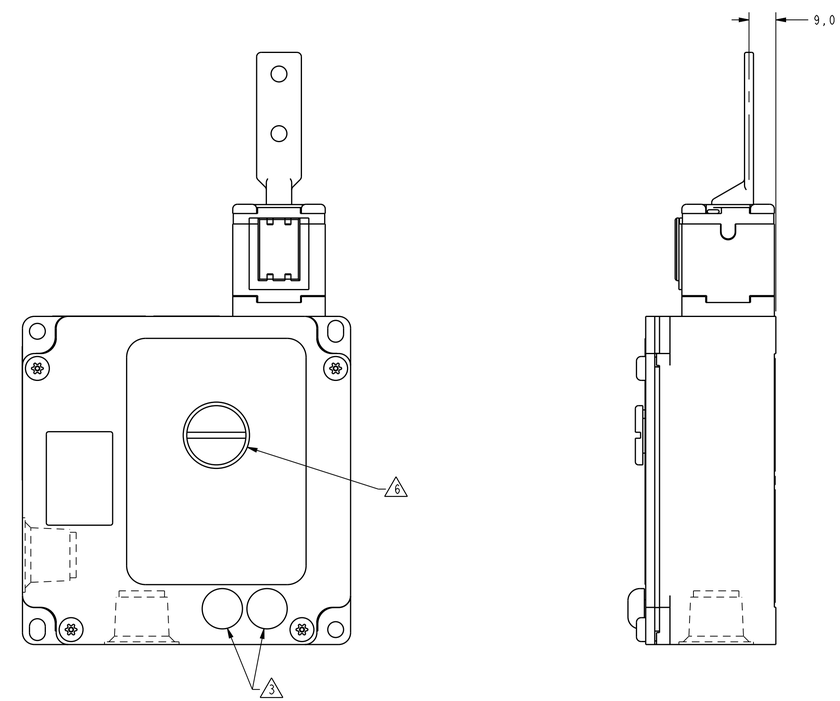

TOP KEY ENTRY

BODY / INDICATOR CODES R OR G

THIS DRAWING COVERS A PROPRIETARY ITEM AND IS THE PROPERTY OF MICRO SWITCH, A DIVISION OF HONEYWELL. THIS DRAWING IS NOT TO BE COPIED OR USED WITHOUT THE APPROVAL OF MICRO SWITCH.

FED. MFG. CODE 91929

MICRO SWITCH a Honeywell Division

SWITCH - DOOR INTERLOCK

CATALOG LISTING

GK SERIES CHART 4

THIRD ANGLE PROJECTION

SCALE 1:1

DO NOT SCALE PRINT

TOLERANCES
APPLY TO DESIGN UNITS. CONVERSIONS ARE ONLY FOR REFERENCE. UNLESS NOTED, TOLERANCES ARE ±

	DIM mm	TOL mm/in	DIM "	TOL mm/in
NO PLACES	X	±1.04	X.X	0.0±.03
ONE PLACE	X.X	0.4±.016	X.XX	0.38±.015
TWO PLACES	X.XX	0.13±.006	X.XXX	0.13±.005
THREE PLACES				
ANGLES				

DESIGN UNITS SI METRIC [X] US CUSTOMARY [ ]

WEIGHT 1,5 kg / 3.3 LB

ANSI Y14.5M-1982 APPLIES

PTC/CAD 3D					
DRAWN MAM 29SEP 98	CHK CMH 11MAY99	CHK PRS 04FEB09	CHK CMH 10NOV11	REPLACES -	
			ISSUE 5254	DRAWING NUMBER M GK SERIES CHART 4	
				PAGE 2 OF 16	
				RELEASE NO. PR-23158	

REVISIONS
N 0047583 SSK 04FEB09
P 0065737 PRS 31MAY10
R 0083578 WBH 10NOV11

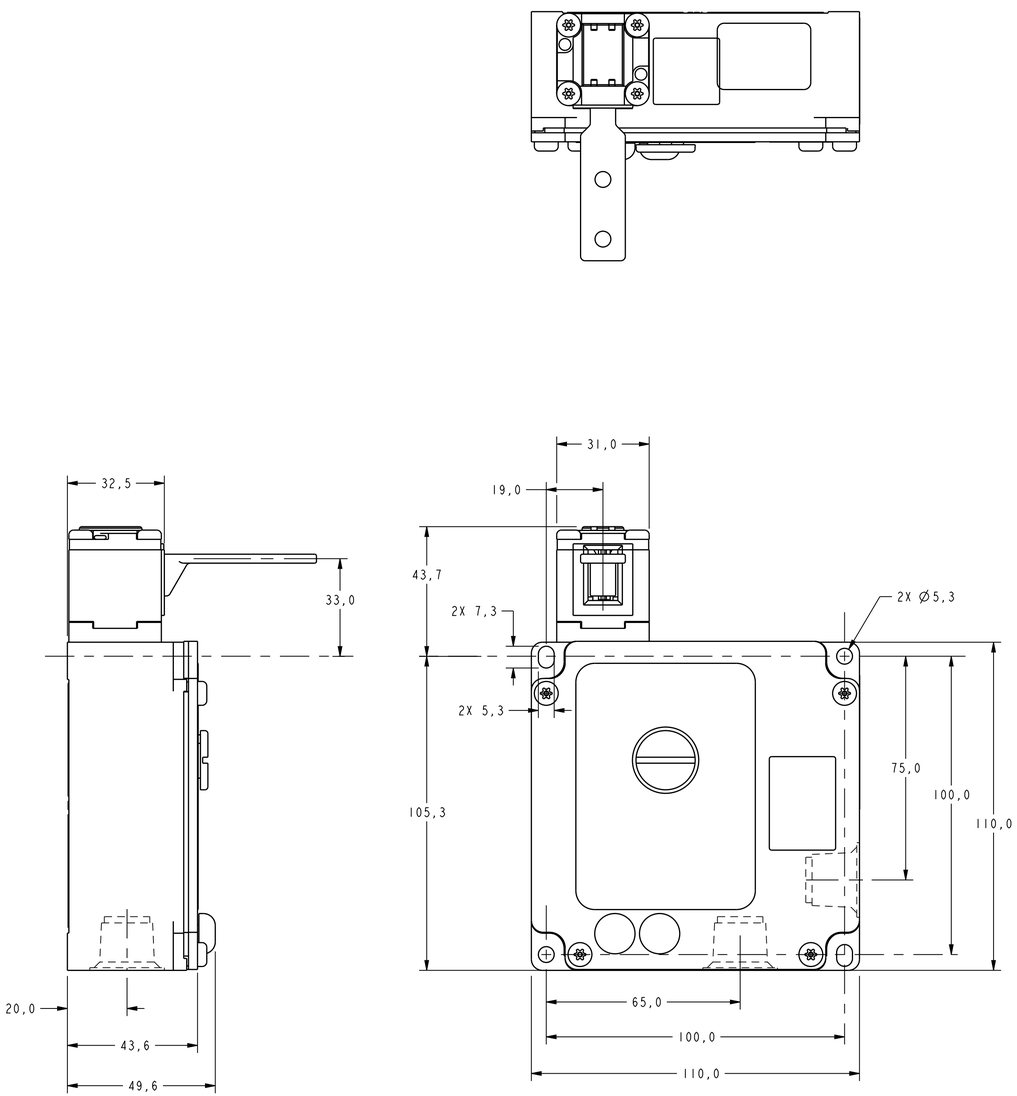

FRONT KEY ENTRY

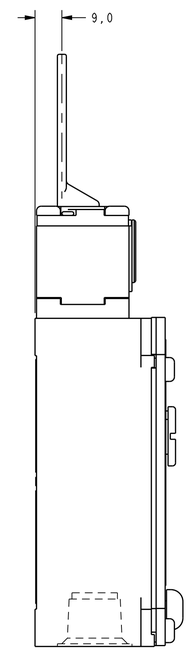

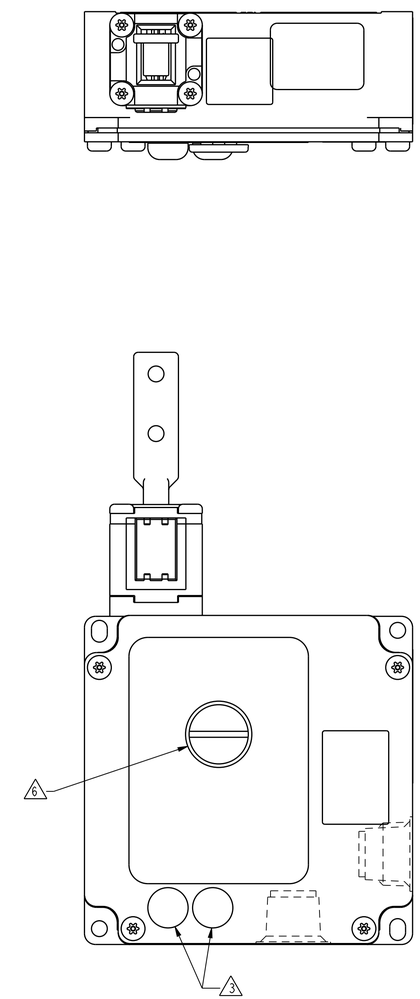

TOP KEY ENTRY

BODY / INDICATOR CODES L OR F

DRAWN	MAM 29SEP98
CHECK	CMH 11 MAY 99
CHECK	PRS
CHECK	CMH 10NOV11
ISSUE	3253
DRAWING NUMBER	M
RELEASE NO.	PR-23758
PAGE	3 OF 16
REPLACES	-
PTC/CAD	3D

REVISIONS

N	0047583 SSK 04FEB09	
P	0065737 PRS 31MAR10	
R	0083578 MSH 10NOV11	

M GK SERIES CHART 4

THIS DRAWING COVERS A PROPRIETARY ITEM AND IS THE PROPERTY OF MICRO SWITCH. A DIVISION OF HONEYWELL. THIS DRAWING IS NOT TO BE COPIED OR USED WITHOUT THE APPROVAL OF MICRO SWITCH.

FED. MFG. CODE 91929

MICRO SWITCH a Honeywell Division

SWITCH - DOOR INTERLOCK

CATALOG LISTING

GK SERIES CHART 4

ANSI Y14.5M-1982 APPLIES

THIRD ANGLE PROJECTION

SCALE 1:1

DO NOT SCALE PRINT

TOLERANCES

APPLY TO DESIGN UNITS. CONVERSIONS ARE ONLY FOR REFERENCE. UNLESS NOTED, TOLERANCES ARE :

	DIM. mm	TOL mm/in	DIM. in	TOL mm/in
NO PLACES	X.	±1/.04	X.	0.5/.02
ONE PLACE	X.X	0.4/.016	X.XX	0.25/.010
TWO PLACES	X.XX	0.15/.006	X.XXX	0.13/.005
THREE PLACES				
ANGLES				

DESIGN UNITS SI METRIC [X] US CUSTOMARY [ ]

WEIGHT 1,5 kg / 3.3 LB

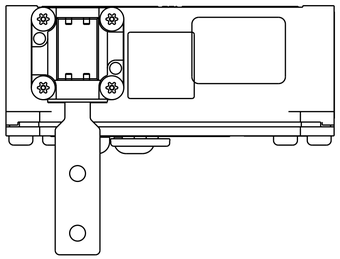

WITH KEY IN FRONT ENTRY POSITION

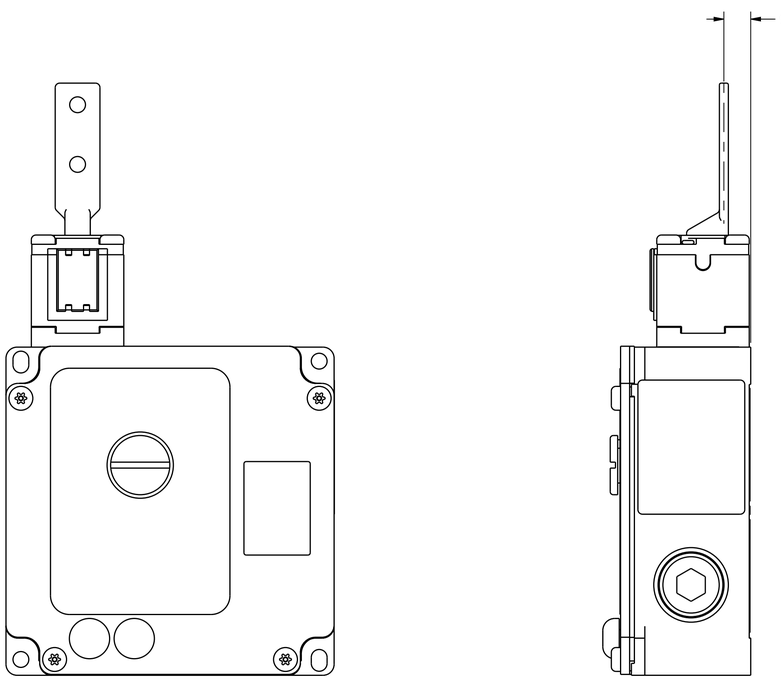

WITH KEY IN TOP ENTRY POSITION

HEAD CODE L

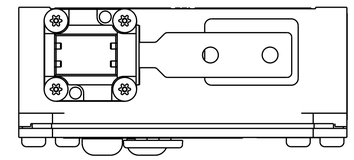

WITH KEY IN FRONT ENTRY POSITION

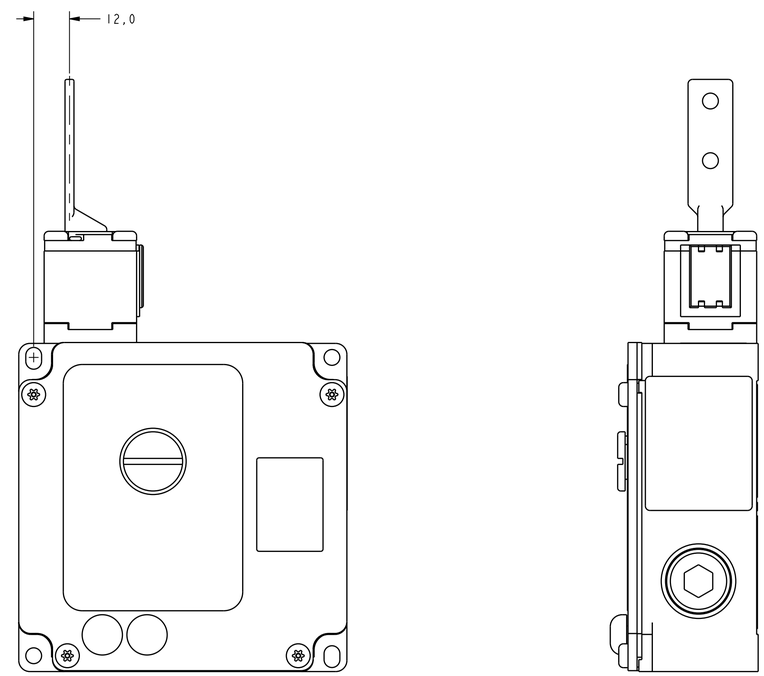

WITH KEY IN TOP ENTRY POSITION

HEAD CODE M

THIRD ANGLE PROJECTION	
SCALE	2 : 1
DO NOT SCALE PRINT	
TOLERANCES APPLY TO DESIGN UNITS. CONVERSIONS ARE ONLY FOR REFERENCE. UNLESS NOTED, TOLERANCES ARE ±	

	DIM mm	TOL mm/±	DIM "	TOL in/±
NO PLACES	X	1/.04	X.X	0.6/.03
ONE PLACE	X.X	0.4/.016	X.XX	0.38/.015
TWO PLACES	X.XX	0.15/.006	X.XXX	0.13/.005
THREE PLACES				
ANGLES				

DESIGN UNITS: SI METRIC [X] US CUSTOMARY [ ]

WEIGHT 1,5 kg / 3.3 LB

THIS DRAWING COVERS A PROPRIETARY ITEM AND IS THE PROPERTY OF MICRO SWITCH. A DIVISION OF HONEYWELL. THIS DRAWING IS NOT TO BE COPIED OR USED WITHOUT THE APPROVAL OF MICRO SWITCH.

FED. MFG. CODE 91929

MICRO SWITCH a Honeywell Division

SWITCH - DOOR INTERLOCK

CATALOG LISTING

GK SERIES CHART 4

ANSI Y14.5M-1982 APPLIES

| | | | |

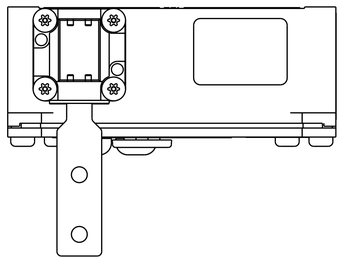

WITH KEY IN FRONT ENTRY POSITION

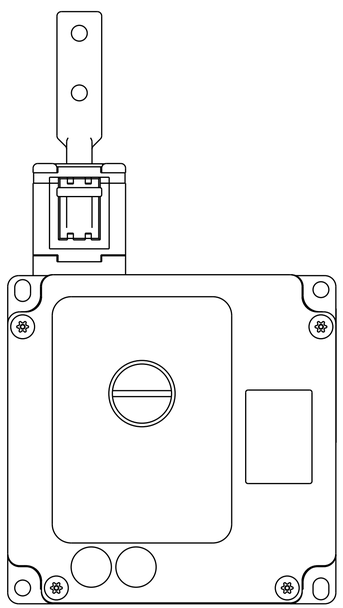

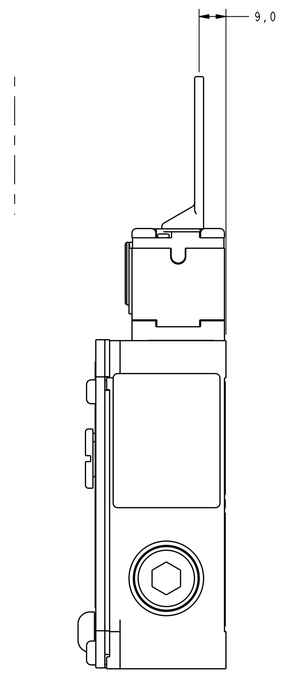

WITH KEY IN TOP ENTRY POSITION

HEAD CODE N

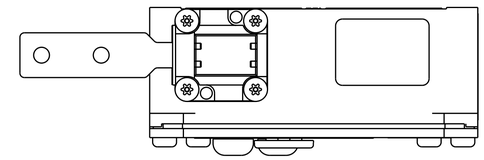

WITH KEY IN FRONT ENTRY POSITION

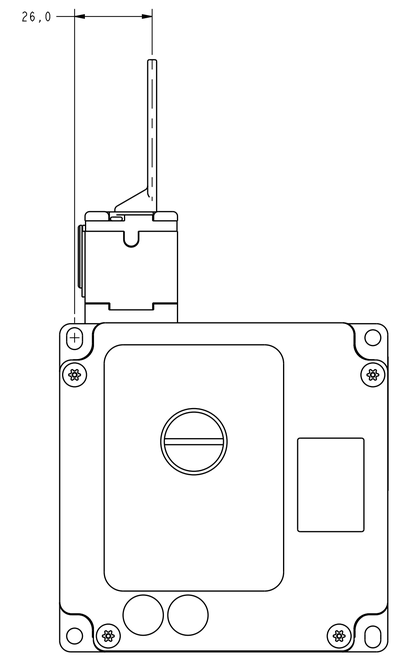

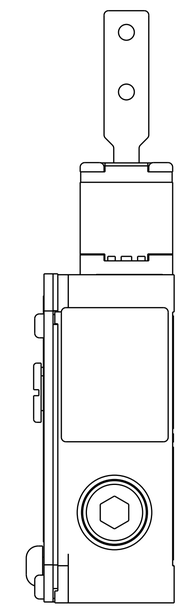

WITH KEY IN TOP ENTRY POSITION

HEAD CODE P

REVISIONS			
N	0041583 SSK 04FEB09	04FEB09	PRS
P	0065737 PRS SIMATIC		
R	0083578 MBR 10NOV11		

ISSUE	DRAWING NUMBER	RELEASE NO.	PAGE	REPLACES
03C54	M	PR-23758	5 OF 16	-

M GK SERIES CHART 4

DRAWN	CHECK	CHECK	CHECK	CHECK	CHECK	CHECK
MAM 30SEP98	CMH	12MAY99	CMH	PRS	04FEB09	10NOV11

PTC/CAD 3D

ANSI Y14.5M-1982 APPLIES

THIS DRAWING COVERS A PROPRIETARY ITEM AND IS THE PROPERTY OF MICRO SWITCH. A DIVISION OF HONEYWELL. THIS DRAWING IS NOT TO BE COPIED OR USED WITHOUT THE APPROVAL OF MICRO SWITCH.

FED. MFG. CODE 91929
MICRO SWITCH
a Honeywell Division

SWITCH - DOOR INTERLOCK

CATALOG LISTING
GK SERIES CHART 4

THIRD ANGLE PROJECTION

SCALE 1:1

DO NOT SCALE PRINT

TOLERANCES
APPLY TO DESIGN UNITS. CONVERSIONS ARE ONLY FOR REFERENCE. UNLESS NOTED, TOLERANCES ARE :

	DIM. mm	TOL. metric	DIM. in	TOL. metric
NO PLACES	X.	±1/2	X.	0.5/-1.5
ONE PLACE	X.X	±0.41/.016	X.XX	0.38/.015
TWO PLACES	X.XX	±0.15/.006	X.XXX	0.13/.005
THREE PLACES				
ANGLES				

DESIGN UNITS: SI METRIC [X] US CUSTOMARY [ ]

WEIGHT 1,5 KG / 3.3 LB

KEY CODE 6

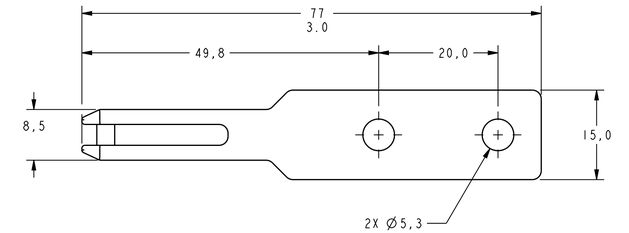

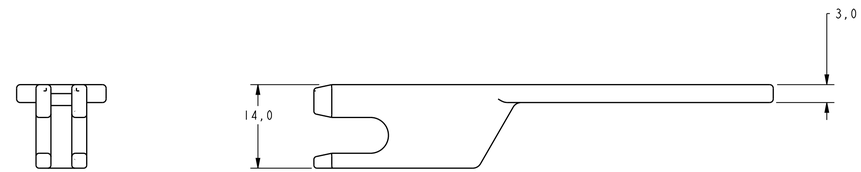

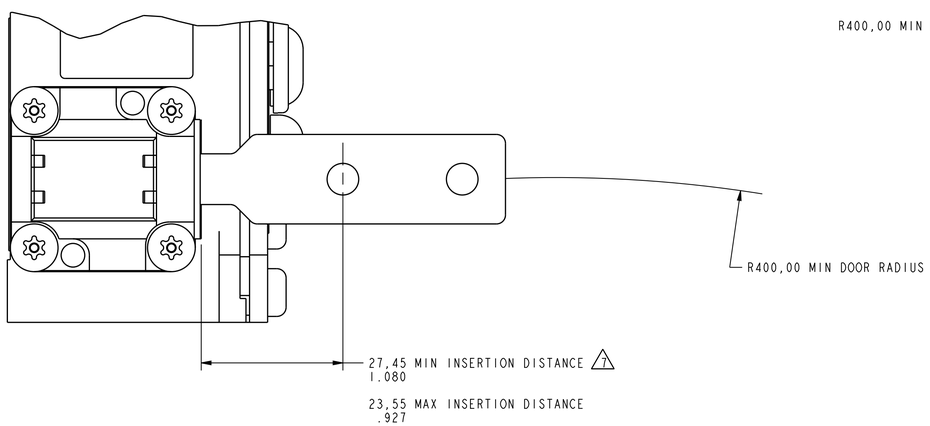

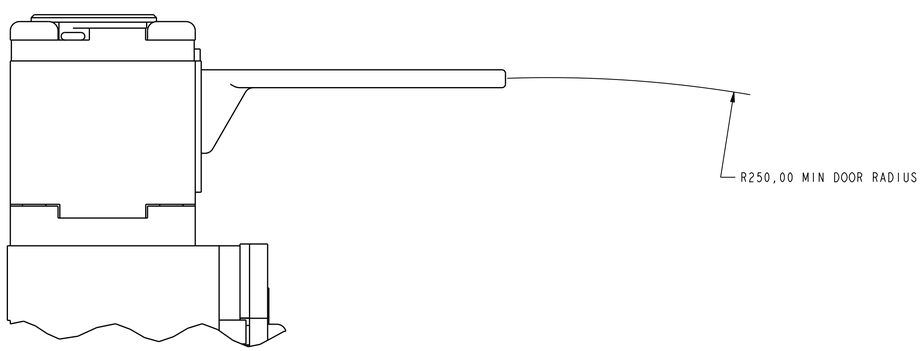

FRONT KEY ENTRY

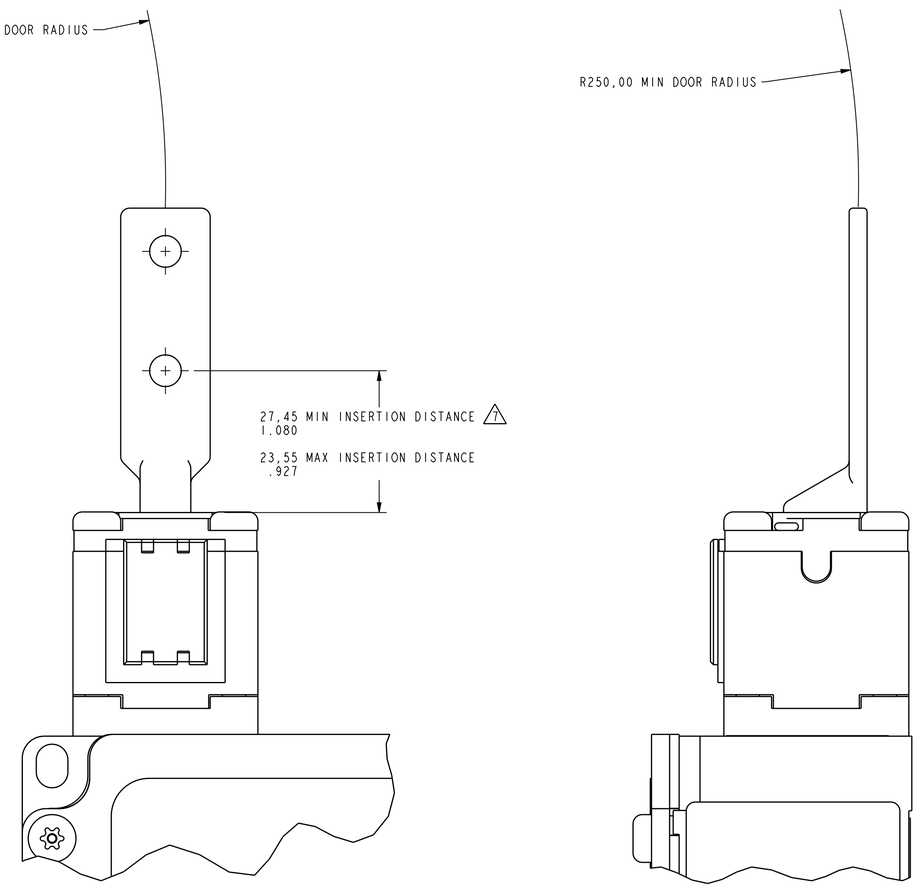

TOP KEY ENTRY

THIS DRAWING COVERS A PROPRIETARY ITEM AND IS THE PROPERTY OF MICRO SWITCH. A DIVISION OF HONEYWELL. THIS DRAWING IS NOT TO BE COPIED OR USED WITHOUT THE APPROVAL OF MICRO SWITCH.

FED. MFG. CODE 91929

MICRO SWITCH a Honeywell Division

SWITCH - DOOR INTERLOCK

CATALOG LISTING

GK SERIES CHART 4

ANSI Y14.5M-1982 APPLIES

THIRD ANGLE PROJECTION

SCALE 2 : 1

DO NOT SCALE PRINT

TOLERANCES
APPLY TO DESIGN UNITS. CONVERSIONS ARE ONLY FOR REFERENCE. UNLESS NOTED, TOLERANCES ARE ±

	DIM mm	TOL mm/in	DIM "	TOL mm/in
NO PLACES	X	±1.04	X.X	0.8/.03
ONE PLACE	X.X	0.4/.016	X.XX	0.38/.015
TWO PLACES	X.XX	0.15/.006	X.XXX	0.13/.005
THREE PLACES				
ANGLES				

DESIGN UNITS SI METRIC [X] US CUSTOMARY [ ]

WEIGHT 1,5 KG / 3.3 LB

PTC/CAD 3D

DRAWN MAM 30SEP98 CHK CMH 12MAY98 CHK PRS 04FEB09

REVISIONS
N 0047583 SSK 04FEB09
P 0065737 PRS 31MAY10
R 0083578 MSH 10NOV11

ISSUE 8254 CHK CMH 10NOV11

DRAWING NUMBER M GK SERIES CHART 4 PAGE 6 OF 16 RELEASE NO. PR-23758 REPLACES -

KEY CODE 7

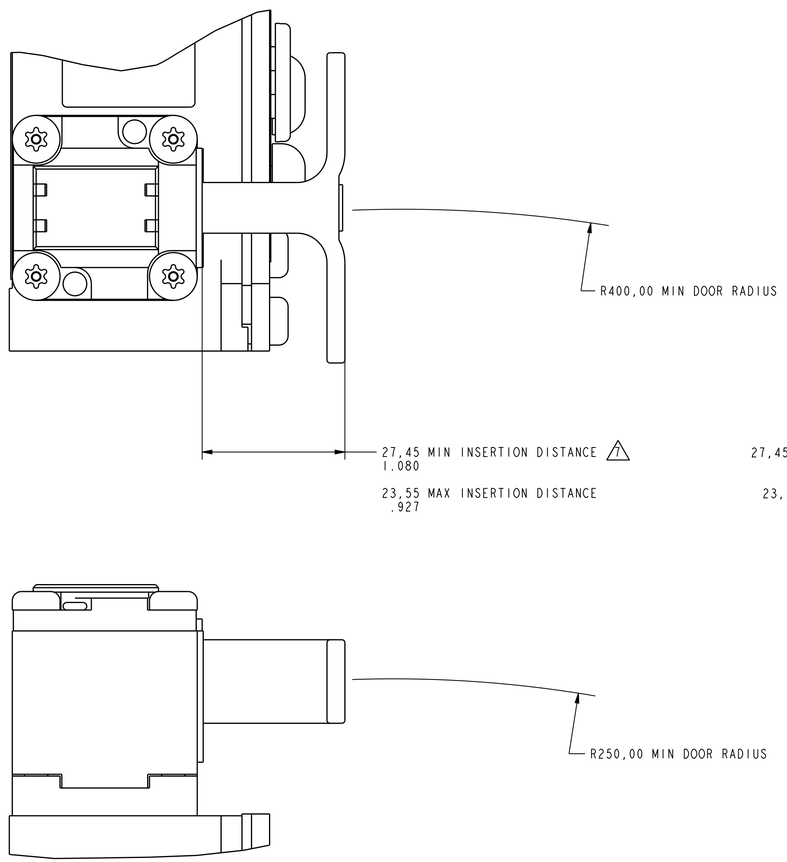

FRONT KEY ENTRY

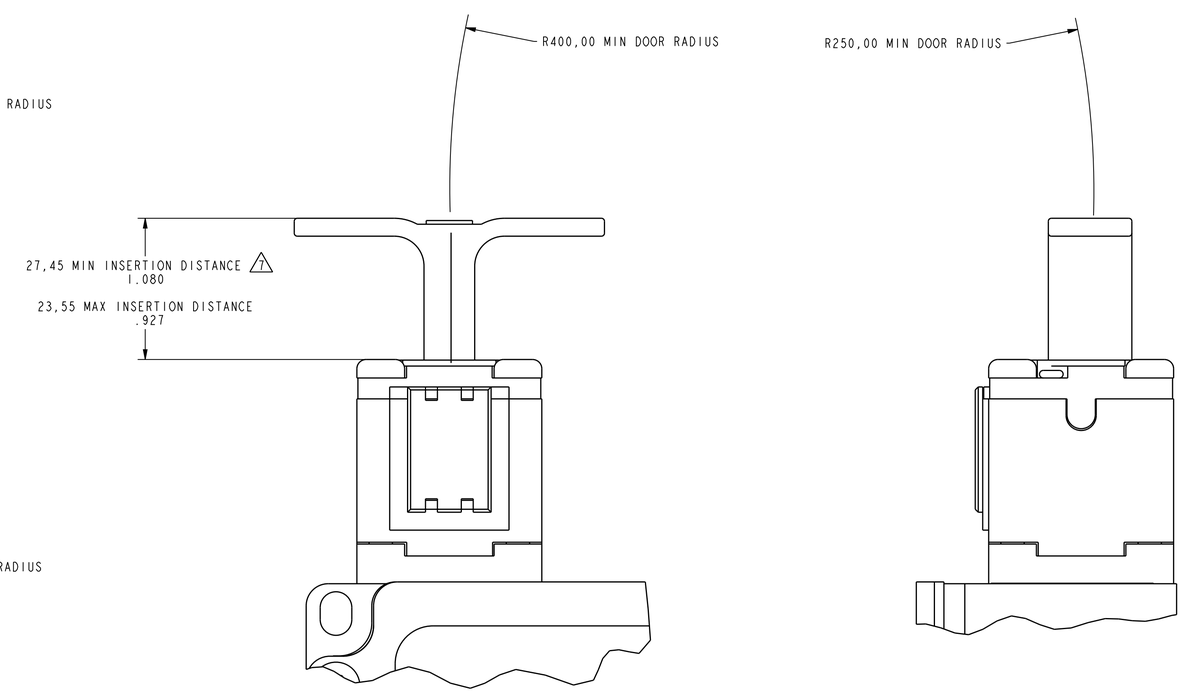

TOP KEY ENTRY

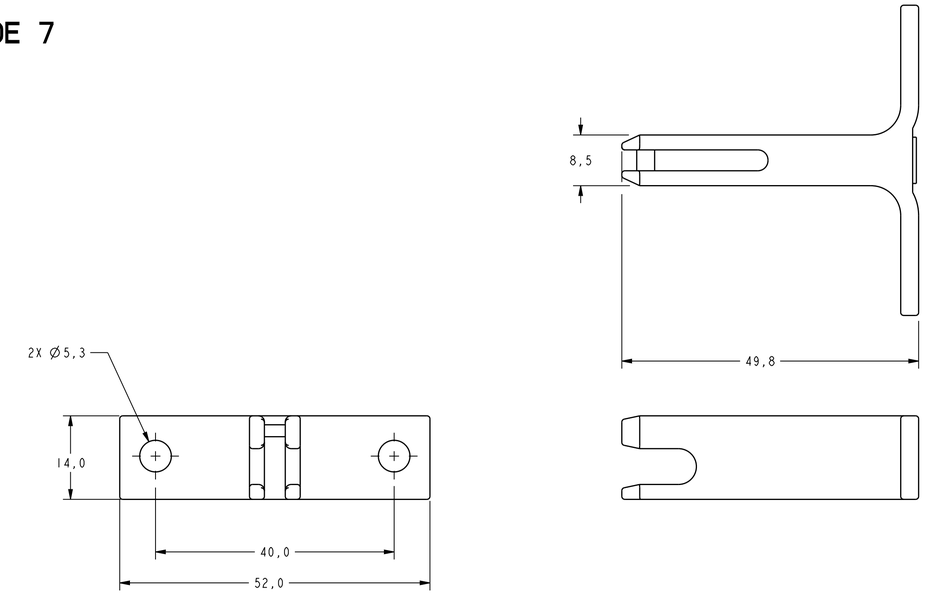

THIRD ANGLE PROJECTION

SCALE 2 : 1

DO NOT SCALE PRINT

TOLERANCES
APPLY TO DESIGN UNITS. CONVERSIONS ARE ONLY FOR REFERENCE. UNLESS NOTED, TOLERANCES ARE ±

	DIM. mm	TOL. mm/in	DIM. in	TOL. mm/in
NO PLACES	X	1/.04	X.X	0.8/.03
ONE PLACE	X.X	0.4/.016	X.XX	0.38/.015
TWO PLACES	X.XX	0.15/.006	X.XXX	0.13/.005
THREE PLACES				
ANGLES				

DESIGN UNITS SI METRIC [X] US CUSTOMARY [ ]

WEIGHT 1,5 KG / 3.3 LB

THIS DRAWING COVERS A PROPRIETARY ITEM AND IS THE PROPERTY OF MICRO SWITCH. A DIVISION OF HONEYWELL. THIS DRAWING IS NOT TO BE COPIED OR USED WITHOUT THE APPROVAL OF MICRO SWITCH.

FED. MFG. CODE 91929

MICRO SWITCH a Honeywell Division

SWITCH - DOOR INTERLOCK

CATALOG LISTING

GK SERIES CHART 4

ANSI Y14.5M-1982 APPLIES

PTC/CAD 3D																			
DRAWN	MAM	10CT98	CHECK	CMH	12MAY99	CHECK	PRS	04FEB09	CHECK	CMH	ISSUE	10NOV11	DRAWING NUMBER	8254	PAGE	7 OF 16	RELEASE NO.	PR-23758	REPLACES -

REVISIONS
N 00475583 SSS 04FEB09
P 00457737 PRS 31MAY10
R 00835578 MBH 10NOV11

M GK SERIES CHART 4

KEY CODE 8

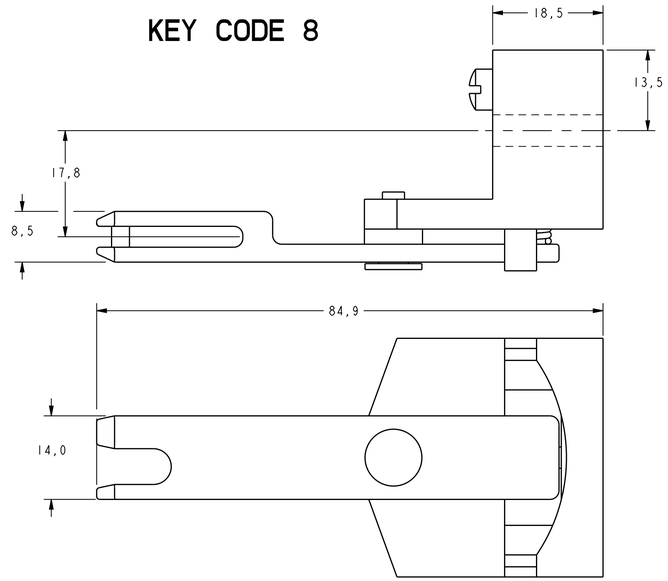

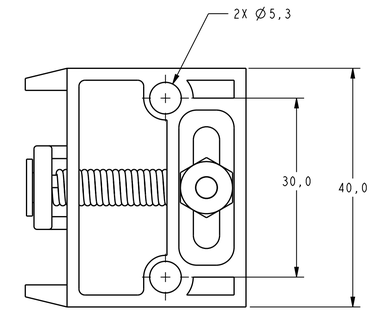

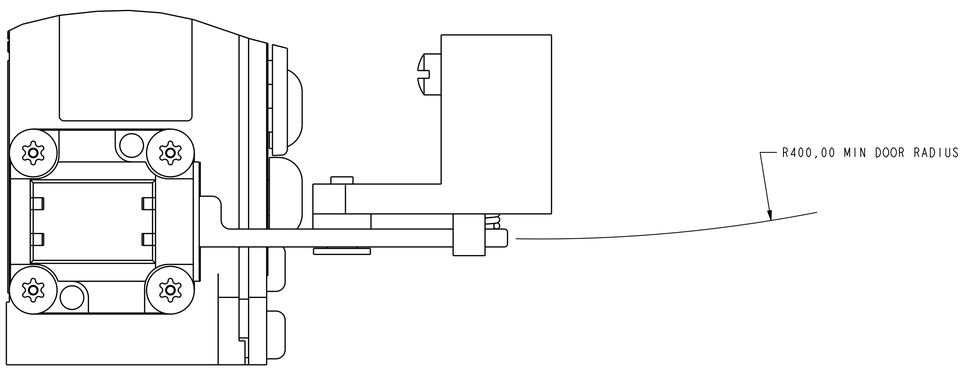

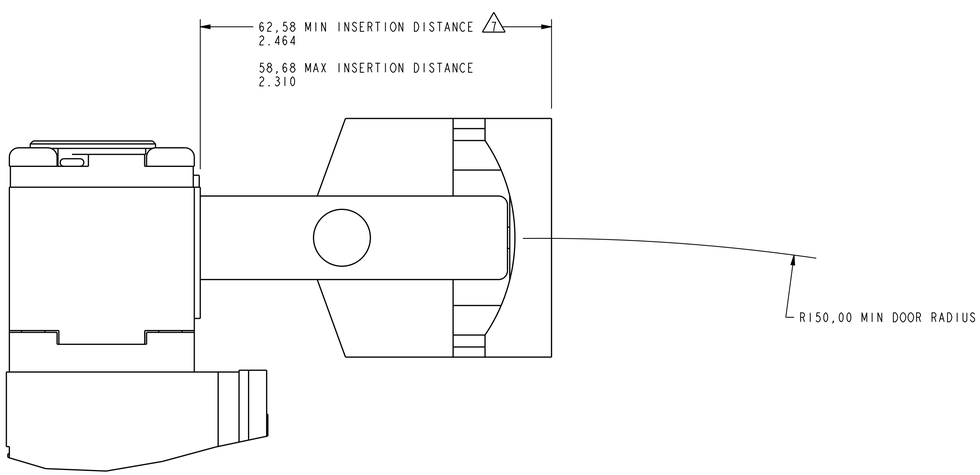

FRONT KEY ENTRY

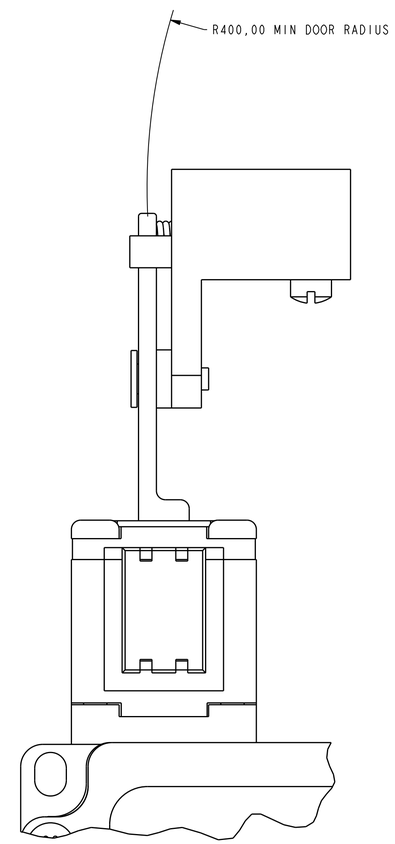

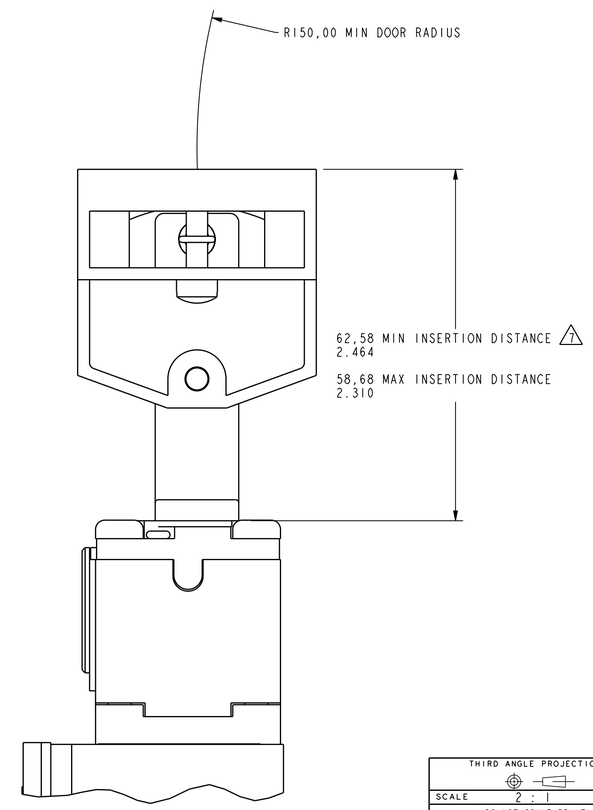

TOP KEY ENTRY

THIRD ANGLE PROJECTION

SCALE 2 : 1

DO NOT SCALE PRINT

TOLERANCES
APPLY TO DESIGN UNITS. CONVERSIONS ARE ONLY FOR REFERENCE. UNLESS NOTED, TOLERANCES ARE :

	DIM. mm	TOL. mm/in	DIM. in	TOL. mm/in
NO PLACES	X.	±1/±0	X.X	0.5/±0
ONE PLACE	X.X	0.4/±0.016	X.XX	0.38/±0.015
TWO PLACES	X.XX	0.15/±0.006	X.XXX	0.13/±0.005
THREE PLACES				
ANGLES				

DESIGN UNITS SI METRIC [X] US CUSTOMARY [ ]

WEIGHT 1,5 KG / 3.3 LB

THIS DRAWING COVERS A PROPRIETARY ITEM AND IS THE PROPERTY OF MICRO SWITCH. A DIVISION OF HONEYWELL. THIS DRAWING IS NOT TO BE COPIED OR USED WITHOUT THE APPROVAL OF MICRO SWITCH.

FED. MFG. CODE 91929
MICRO SWITCH a Honeywell Division

SWITCH - DOOR INTERLOCK

CATALOG LISTING
GK SERIES CHART 4

ANSI Y14.5M-1982 APPLIES

PTC/CAD 3D	DRAWN	MAM	10CT98	CHECK	CMH	CHECK	CMH	CHECK	PRS	CHECK	PRS
REVISIONS	N	0047583 SSK 04FEB09	P	0065737 PRS 11MAY10	R	0083578 MSH 10NOV11					
ISSUE	3254	DRAWING NUMBER	M	GK SERIES CHART 4	PAGE	8 OF 16	RELEASE NO.	PR-23758	REPLACES	-	

KEY CODE 9

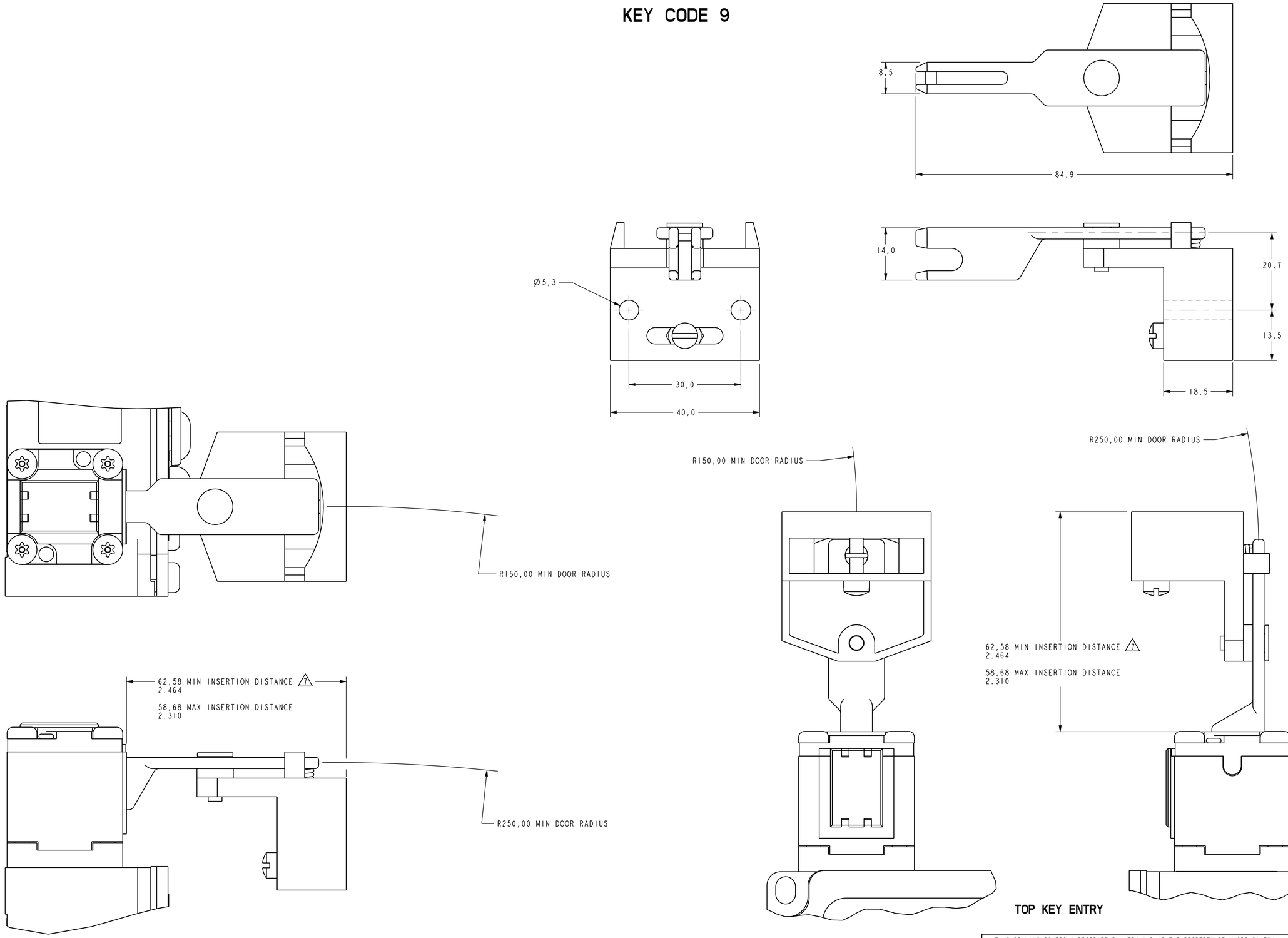

FRONT KEY ENTRY

TOP KEY ENTRY

THIRD ANGLE PROJECTION

SCALE 2 : 1

DO NOT SCALE PRINT

TOLERANCES
APPLY TO DESIGN UNITS. CONVERSIONS ARE ONLY FOR REFERENCE. UNLESS NOTED, TOLERANCES ARE ±

	DIM. mm	TOL. mm/in	DIM. in	TOL. mm/in
NO PLACES	X	1/.04	X.X	0.8/.03
ONE PLACE	X.X	0.4/.016	X.XX	0.38/.015
TWO PLACES	X.XX	0.15/.006	X.XXX	0.13/.005
THREE PLACES				
ANGLES				

DESIGN UNITS SI METRIC [X] US CUSTOMARY [ ]

WEIGHT 1,5 KG / 3.3 LB

THIS DRAWING COVERS A PROPRIETARY ITEM AND IS THE PROPERTY OF MICRO SWITCH, A DIVISION OF HONEYWELL. THIS DRAWING IS NOT TO BE COPIED OR USED WITHOUT THE APPROVAL OF MICRO SWITCH.

FED. MFG. CODE 91929

MICRO SWITCH a Honeywell Division

SWITCH - DOOR INTERLOCK

CATALOG LISTING

GK SERIES CHART 4

ANSI Y14.5M-1982 APPLIES

PTC/CAD 3D

DRAWN MAM 10CT98 | CHECK CMH 12MAY99 | CHECK CMH | CHECK PRS 04FEB09 | 10NOV11

REVISIONS
N 0047583 SSK 04FEB09
P 0065737 PRS 31MAY10
R 0083578 MEH 10NOV11

ISSUE 5254 | DRAWING NUMBER M | PAGE 9 OF 16 | RELEASE NO. PR-23758 | REPLACES -

M GK SERIES CHART 4

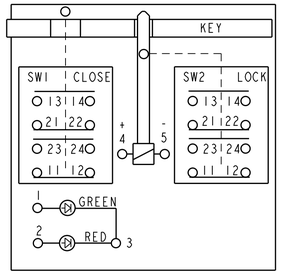

SWITCH CODE - 2

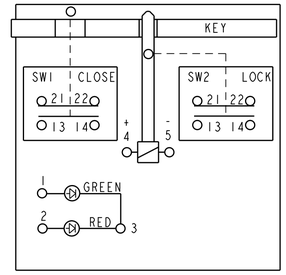

SWITCH CODE - 3 OR 4

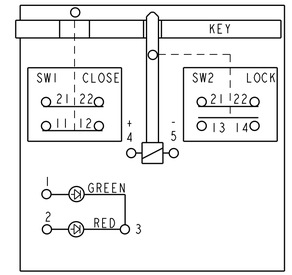

SWITCH CODE - 6

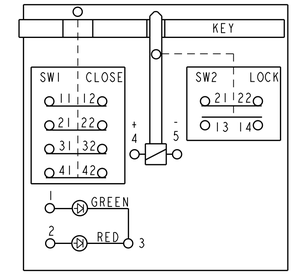

SWITCH CODE - 10

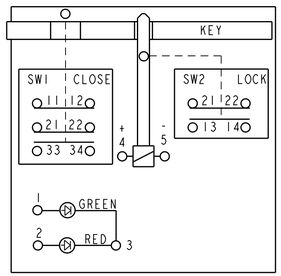

SWITCH CODE - 12

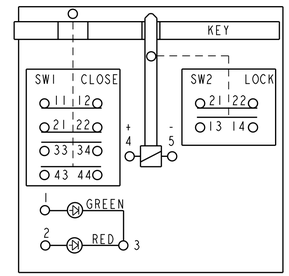

SWITCH CODE - 14

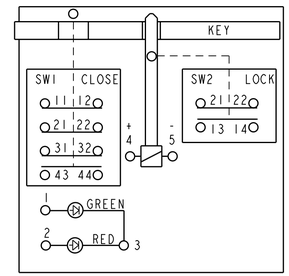

SWITCH CODE - 16

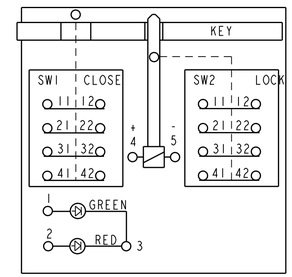

SWITCH CODE - 30 OR 40

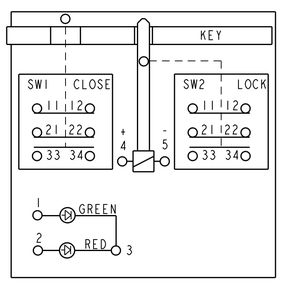

SWITCH CODE - 32 or 42

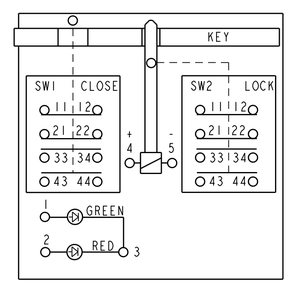

SWITCH CODE - 34 or 44

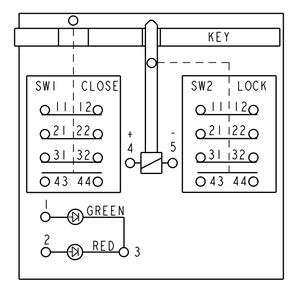

SWITCH CODE - 36 or 46

BODY / INDICATOR CODES - L OR R
TYPE / OVER-RIDE CODES - A OR B
DIAGRAMS SHOWN WITH KEY INSERTED AND LOCKED

THIS DRAWING COVERS A PROPRIETARY ITEM AND IS THE PROPERTY OF MICRO SWITCH, A DIVISION OF HONEYWELL. THIS DRAWING IS NOT TO BE COPIED OR USED WITHOUT THE APPROVAL OF MICRO SWITCH.

FED. MFG. CODE 91929
MICRO SWITCH a Honeywell Division

SWITCH - DOOR INTERLOCK

CATALOG LISTING
GK SERIES CHART 4

THIRD ANGLE PROJECTION
SCALE NTS
DO NOT SCALE PRINT

TOLERANCES
APPLY TO DESIGN UNITS. CONVERSIONS ARE ONLY FOR REFERENCE. UNLESS NOTED, TOLERANCES ARE ±

	DIM. mm	TOL. mm/in	DIM. in	TOL. mm/in
NO PLACES	X	1/.06	X.X	0.8/.03
ONE PLACE	X.X	0.4/.016	X.XX	0.38/.015
TWO PLACES	X.XX	0.15/.006	X.XXX	0.13/.005
THREE PLACES				
ANGLES				

DESIGN UNITS SI METRIC [X] US CUSTOMARY [ ]

WEIGHT 1,5 KG / 3.3 LB

ANSI Y14.5M-1982 APPLIES

PTC/CAD 3D
DRAWN MAM 10CT98 | CMH 12MAY99 | PRS 04FEB09 | CMH 10NOV11
CHECK | CHECK | CHECK | CHECK
ISSUE 5254 | DRAWING NUMBER M | RELEASE NO. PR-23758 | PAGE 10 OF 16 | REPLACES -

M GK SERIES CHART 4

REVISIONS
N 0047583 SSK 04FEB09
P 0065737 PRS 31MAY10
R 0083578

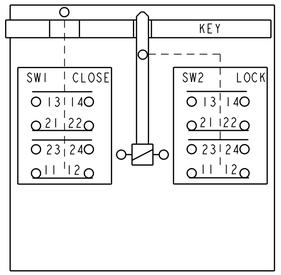

SWITCH CODE - 2

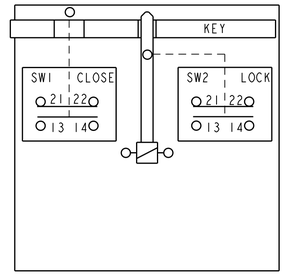

SWITCH CODE - 3 OR 4

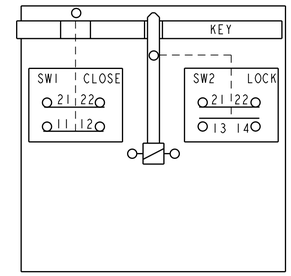

SWITCH CODE - 6

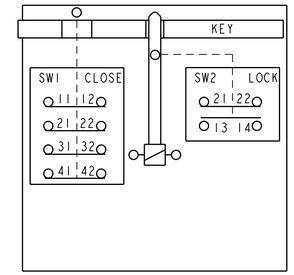

SWITCH CODE - 10

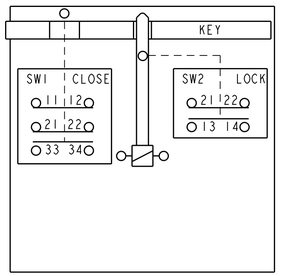

SWITCH CODE - 12

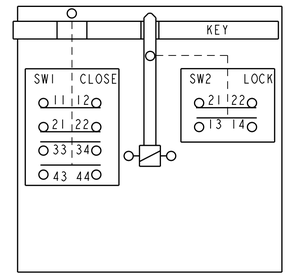

SWITCH CODE - 14

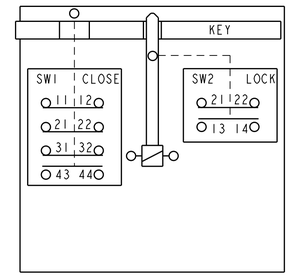

SWITCH CODE - 16

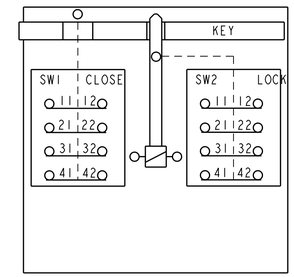

SWITCH CODE - 30 OR 40

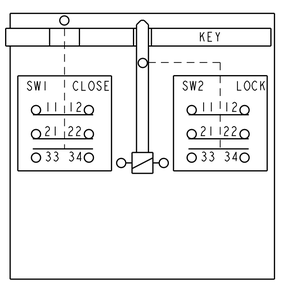

SWITCH CODE - 32 or 42

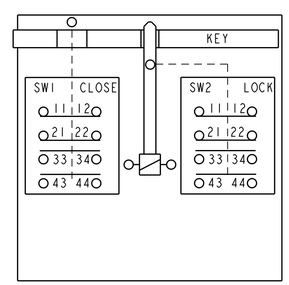

SWITCH CODE - 34 or 44

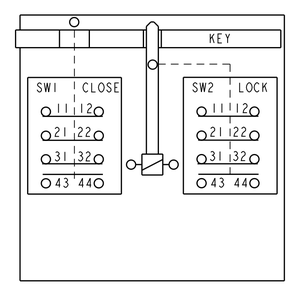

SWITCH CODE - 36 or 46

BODY / INDICATOR CODES - F OR G
TYPE / OVER-RIDE CODES - A OR B
DIAGRAMS SHOWN WITH KEY INSERTED AND LOCKED

ANSI Y14.5M-1982 APPLIES

THIS DRAWING COVERS A PROPRIETARY ITEM AND IS THE PROPERTY OF MICRO SWITCH, A DIVISION OF HONEYWELL. THIS DRAWING IS NOT TO BE COPIED OR USED WITHOUT THE APPROVAL OF MICRO SWITCH.

FED. MFG. CODE 91929
MICRO SWITCH a Honeywell Division

SWITCH - DOOR INTERLOCK

CATALOG LISTING
GK SERIES CHART 4

THIRD ANGLE PROJECTION
SCALE NTS
DO NOT SCALE PRINT

TOLERANCES
APPLY TO DESIGN UNITS. CONVERSIONS ARE ONLY FOR REFERENCE. UNLESS NOTED, TOLERANCES ARE ±

	DIM mm	TOL mm±	DIM in	TOL in±
NO PLACES	X	1/.04	X.X	0.8/.03
ONE PLACE	X.X	0.4/.016	X.XX	0.38/.015
TWO PLACES	X.XX	0.15/.006	X.XXX	0.13/.005
THREE PLACES				
ANGLES				

DESIGN UNITS: SI METRIC [X] US CUSTOMARY [ ]

WEIGHT 1.5 KG / 3.3 LB

PTC/CAD 3D
DRAWN NAM 10CT98 CHECK CMH 12MAY99 CHECK PRS 04FEB09 CHECK CMH 10NOV11 CHECK CMH
ISSUE 5254 DRAWING NUMBER
M GK SERIES CHART 4 PAGE 11 OF 16 RELEASE NO. PR-23758 REPLACES -

REVISIONS
N 0047583 SSR 04FEB09
P 0065737 PRS 31MAY10
R 0083578

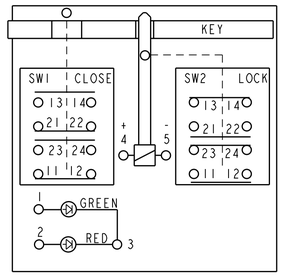

SWITCH CODE - 2

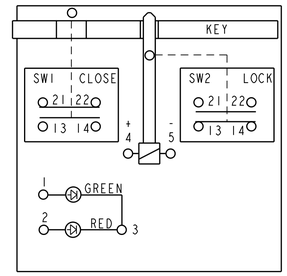

SWITCH CODE - 3 OR 4

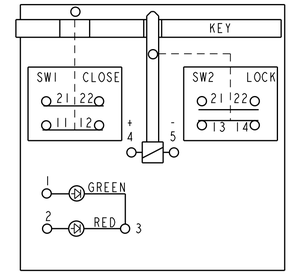

SWITCH CODE - 6

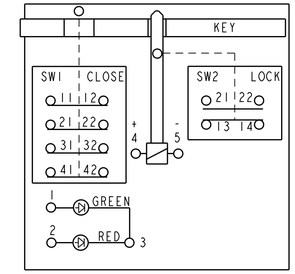

SWITCH CODE - 10

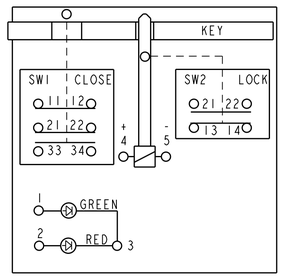

SWITCH CODE - 12

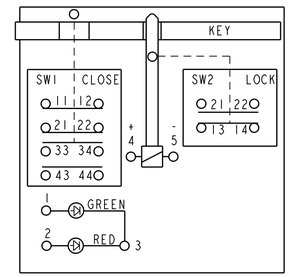

SWITCH CODE - 14

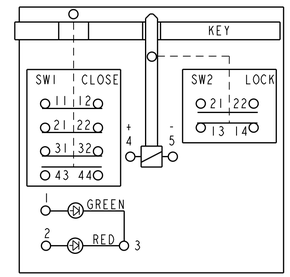

SWITCH CODE - 16

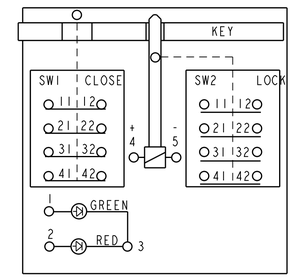

SWITCH CODE - 30 OR 40

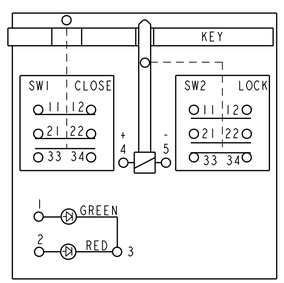

SWITCH CODE - 32 or 42

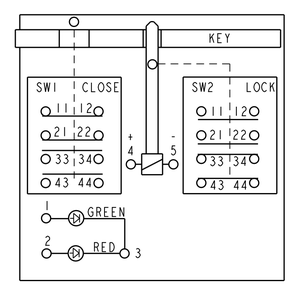

SWITCH CODE - 34 or 44

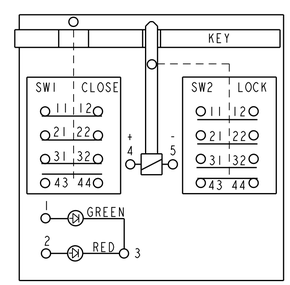

SWITCH CODE - 36 or 46

BODY / INDICATOR CODES - L OR R
TYPE / OVER-RIDE CODES - S OR T
DIAGRAMS SHOWN WITH KEY INSERTED AND LOCKED

THIS DRAWING COVERS A PROPRIETARY ITEM AND IS THE PROPERTY OF MICRO SWITCH, A DIVISION OF HONEYWELL. THIS DRAWING IS NOT TO BE COPIED OR USED WITHOUT THE APPROVAL OF MICRO SWITCH.

FED. MFG. CODE 91929
MICRO SWITCH a Honeywell Division

SWITCH - DOOR INTERLOCK

CATALOG LISTING
GK SERIES CHART 4

ANSI Y14.5M-1982 APPLIES

THIRD ANGLE PROJECTION
SCALE NTS
DO NOT SCALE PRINT

TOLERANCES
APPLY TO DESIGN UNITS. CONVERSIONS ARE ONLY FOR REFERENCE. UNLESS NOTED, TOLERANCES ARE ±

	DIM mm	TOL mm±±	DIM in	TOL in±±
NO PLACES	X	1/.04	X	0.8/.03
ONE PLACE	X.X	0.4/.016	X.X	0.38/.015
TWO PLACES	X.XX	0.15/.006	X.XX	0.13/.005
THREE PLACES				
ANGLES				

DESIGN UNITS SI METRIC [X] US CUSTOMARY [ ]

WEIGHT 1.5 KG / 3.3 LB

PTC/CAD 30
DRAWN MAM 10CT98 | CHECK DVM | CHECK 21SEP06 | CHECK PRS | CHECK 04FEB09 | CHECK CMH | 10NOV11
ISSUE 32E4 | DRAWING NUMBER M | PAGE 12 OF 16 | RELEASE NO. PR-23758 | REPLACES -
M GK SERIES CHART 4

REVISIONS
N 0047583 SSK 04FEB09
P 0065737 PRS 31MAY10
R 0083578

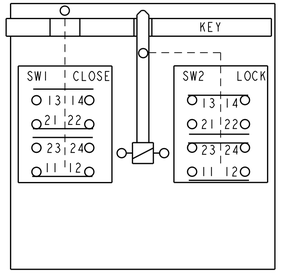

SWITCH CODE - 2

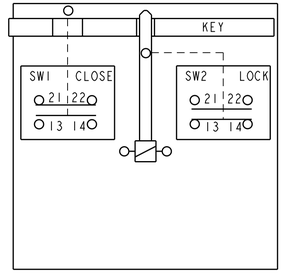

SWITCH CODE - 3 OR 4

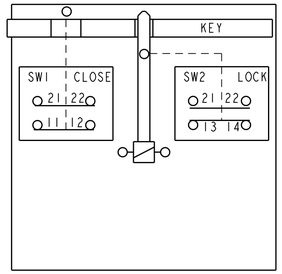

SWITCH CODE - 6

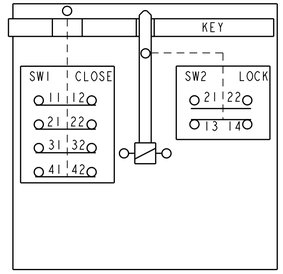

SWITCH CODE - 10

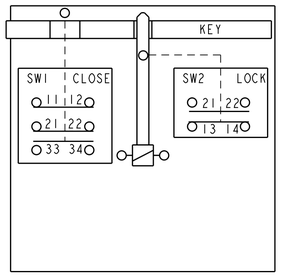

SWITCH CODE - 12

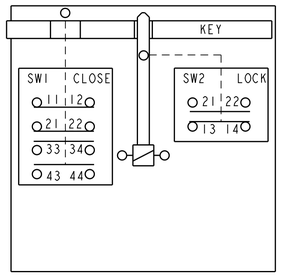

SWITCH CODE - 14

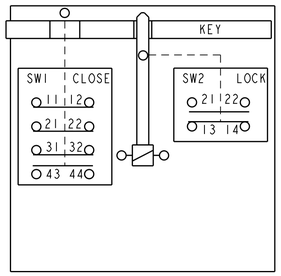

SWITCH CODE - 16

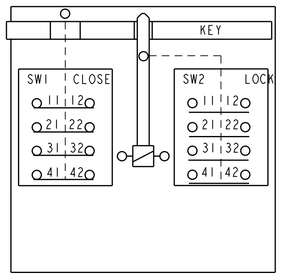

SWITCH CODE - 30 OR 40

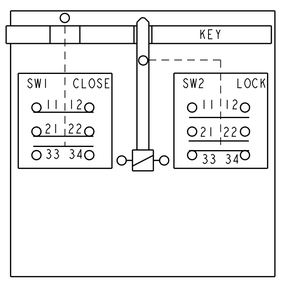

SWITCH CODE - 32 or 42

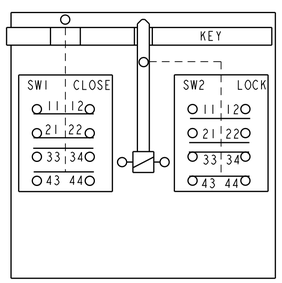

SWITCH CODE - 34 or 44

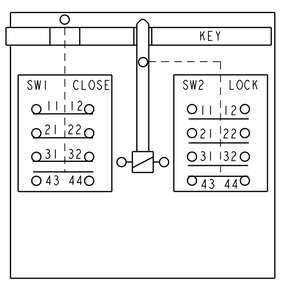

SWITCH CODE - 36 or 46

BODY / INDICATOR CODES - F OR G
TYPE / OVER-RIDE CODES - S OR T
DIAGRAMS SHOWN WITH KEY INSERTED AND LOCKED

PTC/CAD 3D	
DRAWN	MAM 10CT98
CHECK	CMH 12MAY99
CHECK	PRS 04FEB09
REVISIONS	N 0047583 SSK 04FEB09; P 0065737 PRS 11MAY10; R 0083578 MSH 10NOV11
CHECK	CMH
ISSUE	3254
DRAWING NUMBER	M
	GK SERIES CHART 4
PAGE	13 OF 16
RELEASE NO.	PR-23758
REPLACES	-

THIS DRAWING COVERS A PROPRIETARY ITEM AND IS THE PROPERTY OF MICRO SWITCH. A DIVISION OF HONEYWELL. THIS DRAWING IS NOT TO BE COPIED OR USED WITHOUT THE APPROVAL OF MICRO SWITCH.

FED. MFG. CODE 91929
MICROSWITCH a Honeywell Division

SWITCH - DOOR INTERLOCK

CATALOG LISTING
GK SERIES CHART 4

ANSI Y14.5M-1982 APPLIES

THIRD ANGLE PROJECTION

SCALE NTS

DO NOT SCALE PRINT

TOLERANCES
APPLY TO DESIGN UNITS. CONVERSIONS ARE ONLY FOR REFERENCE. UNLESS NOTED, TOLERANCES ARE :

	DIM mm	TOL mm	DIM in	TOL mm/.
NO PLACES	X	±1.00	X	0.01/.03
ONE PLACE	X.X	±0.10/.016	X.XX	0.25/.015
TWO PLACES	X.XX	±0.15/.006	X.XXX	0.13/.005
THREE PLACES				
ANGLES				

DESIGN UNITS SI METRIC [X] US CUSTOMARY [ ]

WEIGHT 1.5 KG / 3.3 LB

MICRO SWITCH
a Honeywell Division
FED. MFG. CODE 91929

SWITCH-DOOR INTERLOCK

CATALOG LISTING
GK SERIES CHART 4

THIS DRAWING COVERS A PROPRIETARY ITEM AND IS THE PROPERTY OF MICRO SWITCH, A DIVISION OF HONEYWELL. THIS DRAWING IS NOT TO BE COPIED OR USED WITHOUT THE APPROVAL OF MICRO SWITCH

MODIFICATION CODE: F05

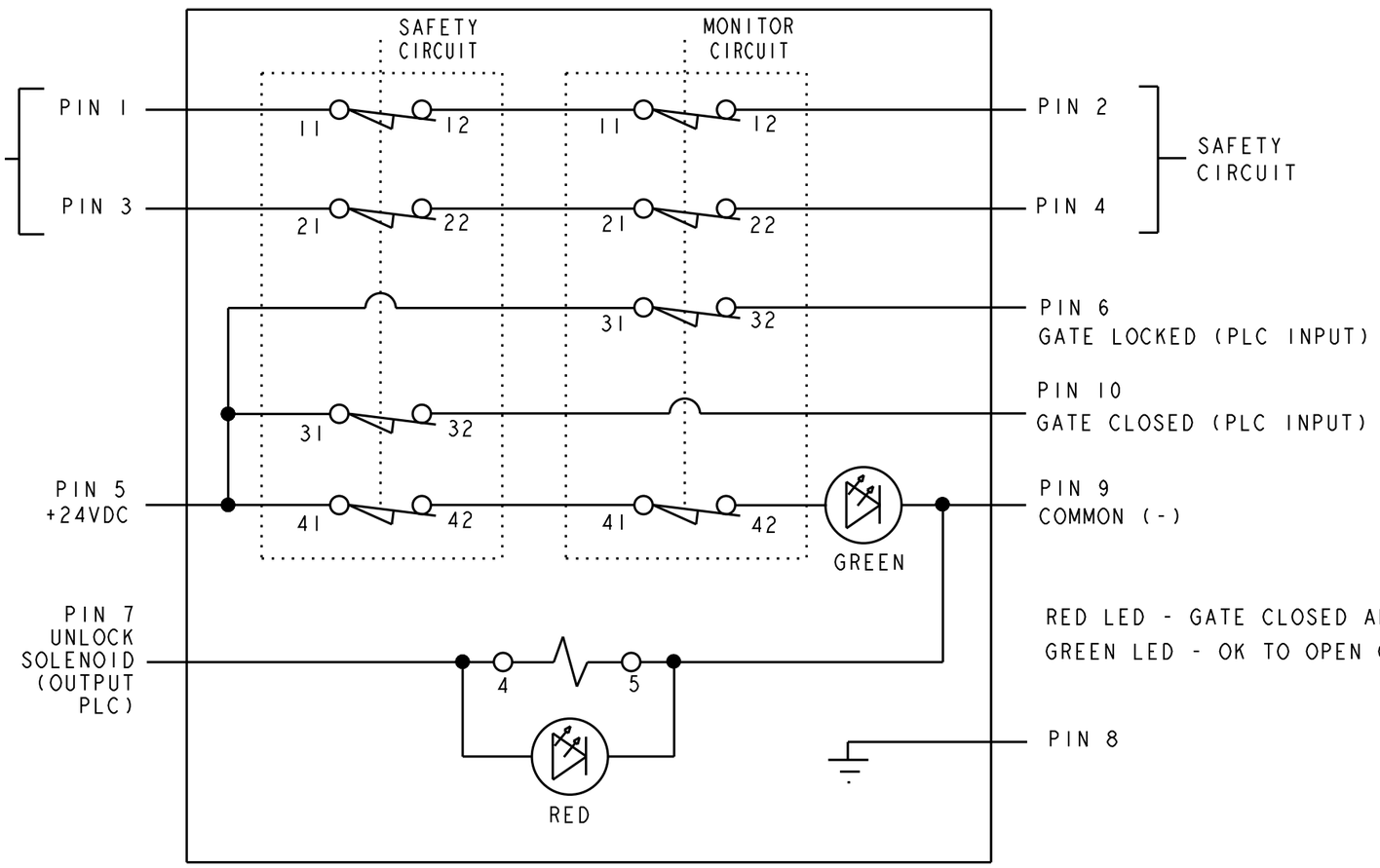

RED LED - GATE CLOSED AND LOCKED
GREEN LED - OK TO OPEN GATE

SWITCH DIAGRAM STATE
IS CLOSED AND LOCKED

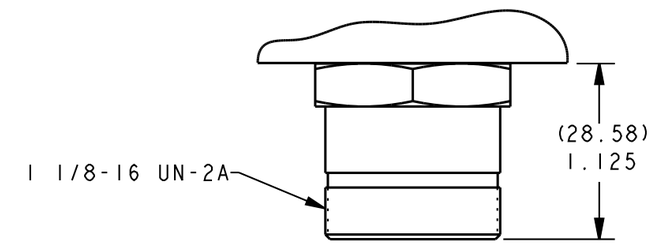

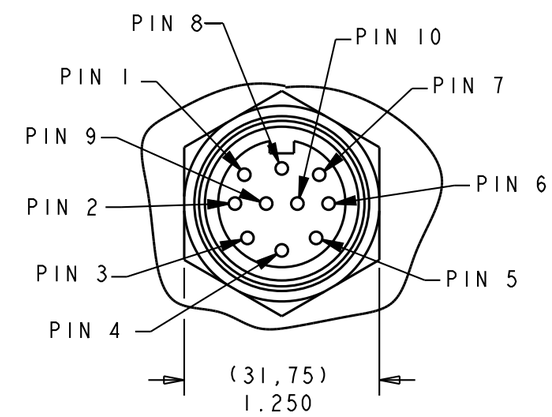

300V 7A
BRAD-HARRISON PART NO. 3R1006A21F010
OR EQUIVALENT

THIRD ANGLE PROJECTION

SCALE NTS

DO NOT SCALE PRINT

TOLERANCES
APPLY TO DESIGN UNITS. CONVERSIONS ARE ONLY FOR REFERENCE. UNLESS NOTED, TOLERANCES ARE ±

	DIM. mm	TOL mm/in	DIM. in	TOL mm/in
NO PLACES	X	1/.04	X.X	0.8/.03
ONE PLACE	X.X	0.4/.016	X.XX	0.38/.015
TWO PLACES	X.XX	0.15/.006	X.XXX	0.13/.005
THREE PLACES				
ANGLES				

DESIGN UNITS SI METRIC ☒ US CUSTOMARY ☐

WEIGHT 2,3 kg / 5 LB MAX

ANSI Y14.5M-1982 APPLIES

CATALOG LISTING GK SERIES CHART 4
PAGE 14 OF 16
RELEASE NO. PR-24370
REPLACES -
ISSUE 54
10NOV11
CMH
CHECK
REVISIONS
N 0047583 SSK 04FEB09
P 0065737 PRS 31MAY10
R 0083578 MBH 10NOV11
04FEB09
PRS
CHECK
9 DEC 99
JAF
CHECK
9 DEC 99
LJK
DRAWN
PTC/CAD 3D

MODIFICATION CODE: -FW

DC SOLENOID VOLTAGE DEVICES 13

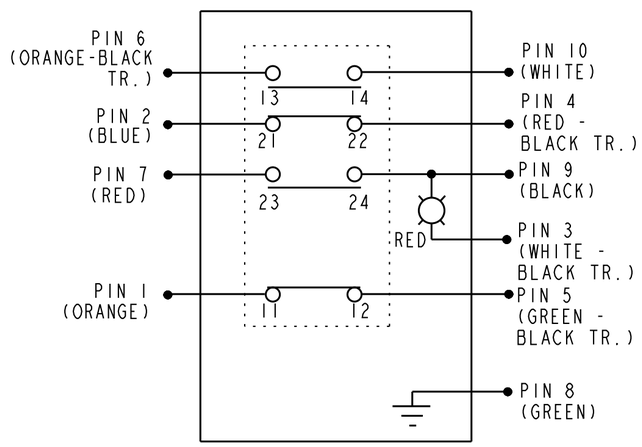

GATE SIDE BASIC SWITCH
TO 10-PIN CONNECTOR CIRCUIT DIAGRAM

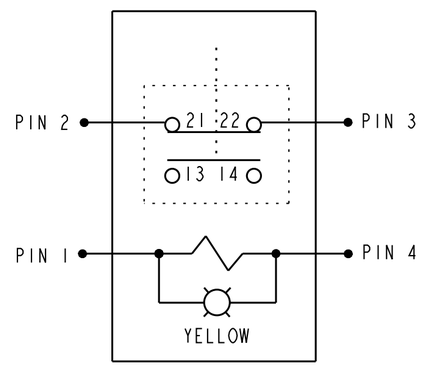

MONITOR SIDE BASIC SWITCH
TO 4-PIN CONNECTOR CIRCUIT DIAGRAM

DIAGRAMS SHOWN WITH KEY INSERTED AND LOCKED

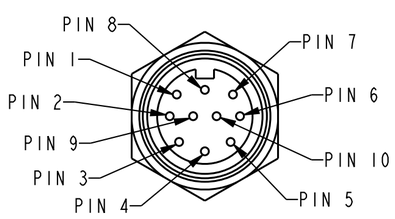

10-PIN CONNECTOR 15 18

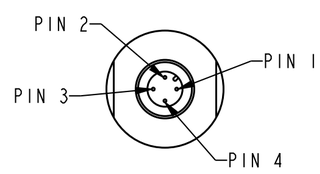

4-PIN CONNECTOR 16 19

AC SOLENOID VOLTAGE DEVICES 13

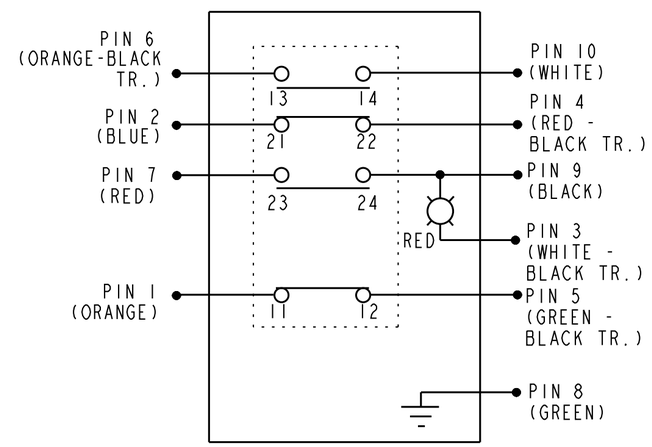

GATE SIDE BASIC SWITCH
TO 10-PIN CONNECTOR CIRCUIT DIAGRAM

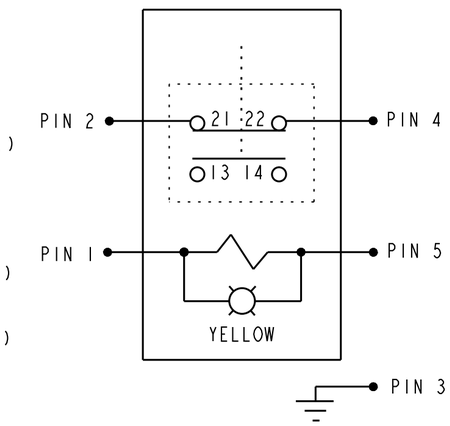

MONITOR SIDE BASIC SWITCH
TO 5-PIN CONNECTOR CIRCUIT DIAGRAM

DIAGRAMS SHOWN WITH KEY INSERTED AND LOCKED

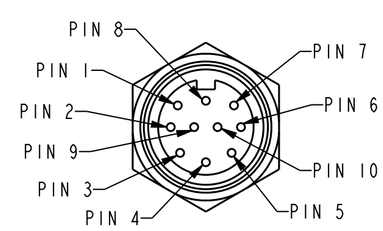

10-PIN CONNECTOR 15 18

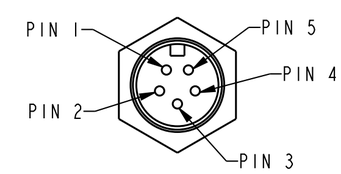

5-PIN CONNECTOR 17 19

THIRD ANGLE PROJECTION

SCALE NTS

DO NOT SCALE PRINT

TOLERANCES
APPLY TO DESIGN UNITS. CONVERSIONS ARE ONLY FOR REFERENCE. UNLESS NOTED, TOLERANCES ARE ±

	DIM. mm	TOL mm/in	DIM. in	TOL mm/in
NO PLACES	X	1/.04	X	0.8/.03
ONE PLACE	X.X	0.4/.016	X.XX	0.38/.015
TWO PLACES	X.XX	0.15/.006	X.XXX	0.13/.005
THREE PLACES				
ANGLES				

DESIGN UNITS SI METRIC [X] US CUSTOMARY [ ]

WEIGHT 2,3 kg / 5 LB MAX

THIS DRAWING COVERS A PROPRIETARY ITEM AND IS THE PROPERTY OF MICRO SWITCH. A DIVISION OF HONEYWELL. THIS DRAWING IS NOT TO BE COPIED OR USED WITHOUT THE APPROVAL OF MICRO SWITCH.

MICRO SWITCH a Honeywell Division
FED. MFG. CODE 91929

SWITCH - DOOR INTERLOCK

CATALOG LISTING
GK SERIES CHART 4

ANSI Y14.5M-1982 APPLIES

GK SERIES CHART 4	PAGE 15 OF 16	NO. PR-24370	REPLACES -	RELEASE	DRAWING NUMBER 5254	ISSUE	CMH	CHECK	04FEB09	PRS	CHECK
10NOV11	18JAN00	SAV	CHECK	18JAN00	DRAWN	GRT	PTC/CAD 3D				

REVISIONS
N 0047583 SSK 04FEB09
P 0065737 PRS 31MAY10
R 0083578 MBH 10NOV11

MICRO SWITCH
a Honeywell Division
FED. MFG. CODE 91929

SWITCH-DOOR INTERLOCK

CATALOG LISTING
GK SERIES CHART 4

THIS DRAWING COVERS A PROPRIETARY ITEM AND IS THE PROPERTY OF MICRO SWITCH, A DIVISION OF HONEYWELL. THIS DRAWING IS NOT TO BE COPIED OR USED WITHOUT THE APPROVAL OF MICRO SWITCH

MODIFICATION CODE: F04

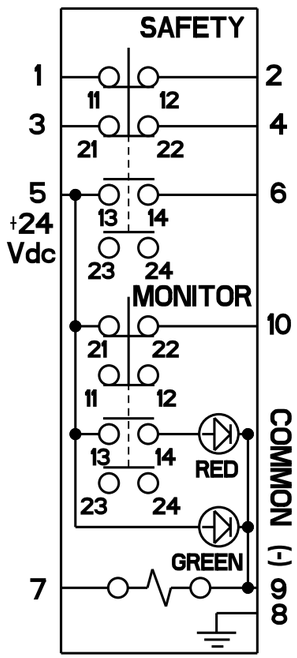

SWITCH DIAGRAM STATE
IS CLOSED AND LOCKED

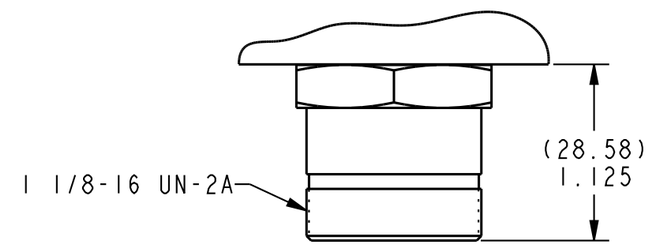

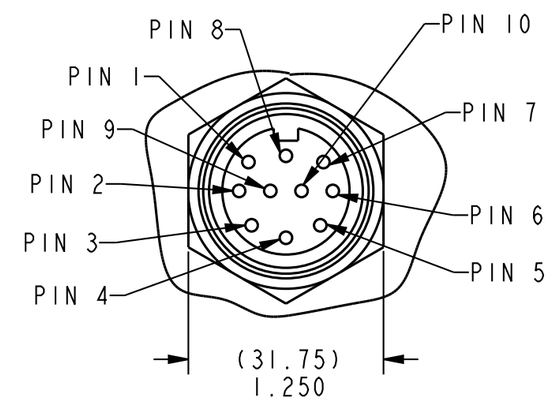

300V 7A
BRAD-HARRISON PART NO. 3R1006A21F010
OR EQUIVALENT

ANSI Y14.5M-1982 APPLIES

THIRD ANGLE PROJECTION

SCALE NTS

DO NOT SCALE PRINT

TOLERANCES
APPLY TO DESIGN UNITS. CONVERSIONS ARE ONLY FOR REFERENCE. UNLESS NOTED, TOLERANCES ARE ±

	DIM. mm	TOL mm/in	DIM. in	TOL mm/in
NO PLACES	X	1/.04	X.X	0.8/.03
ONE PLACE	X.X	0.4/.016	X.XX	0.38/.015
TWO PLACES	X.XX	0.15/.006	X.XXX	0.13/.005
THREE PLACES				
ANGLES				

DESIGN UNITS SI METRIC ☒ US CUSTOMARY ☐

WEIGHT 2,3 kg / 5 LB MAX

CATALOG LISTING GK SERIES CHART 4
PAGE 16 OF 16
ISSUE 54
REPLACES -
RELEASE NO. 10NOV11

DRAWN	RS	17DEC04
CHECK		
	AK	17DEC04
CHECK		
	PRS	04FEB09
CHECK		
	CMH	10NOV11
CHECK		

REVISIONS

N	0047583	SSK 04FEB09
P	0065737	PRS 31MAY10
R	0083578	MBH 10NOV11

PTC/CAD 3D