THIS DRAWING IS UNPUBLISHED. RELEASED FOR PUBLICATION 2011
© COPYRIGHT 2011 - ALL RIGHTS RESERVED.

LOC	DIST
A1	-

REVISIONS

P	LTR	DESCRIPTION	DATE	DWN	APVD
	H1	COLOR CODE DETAILS ADDED	04JAN2014	TJ	JK
	H2	ADDITION OF NOTE 13. TEXT "REF" DIM 2.3 & 2.9 IN ZONE C1 & C2. "29.4 MAX" IN ZONE B3	21JULY2015	TJ	PS

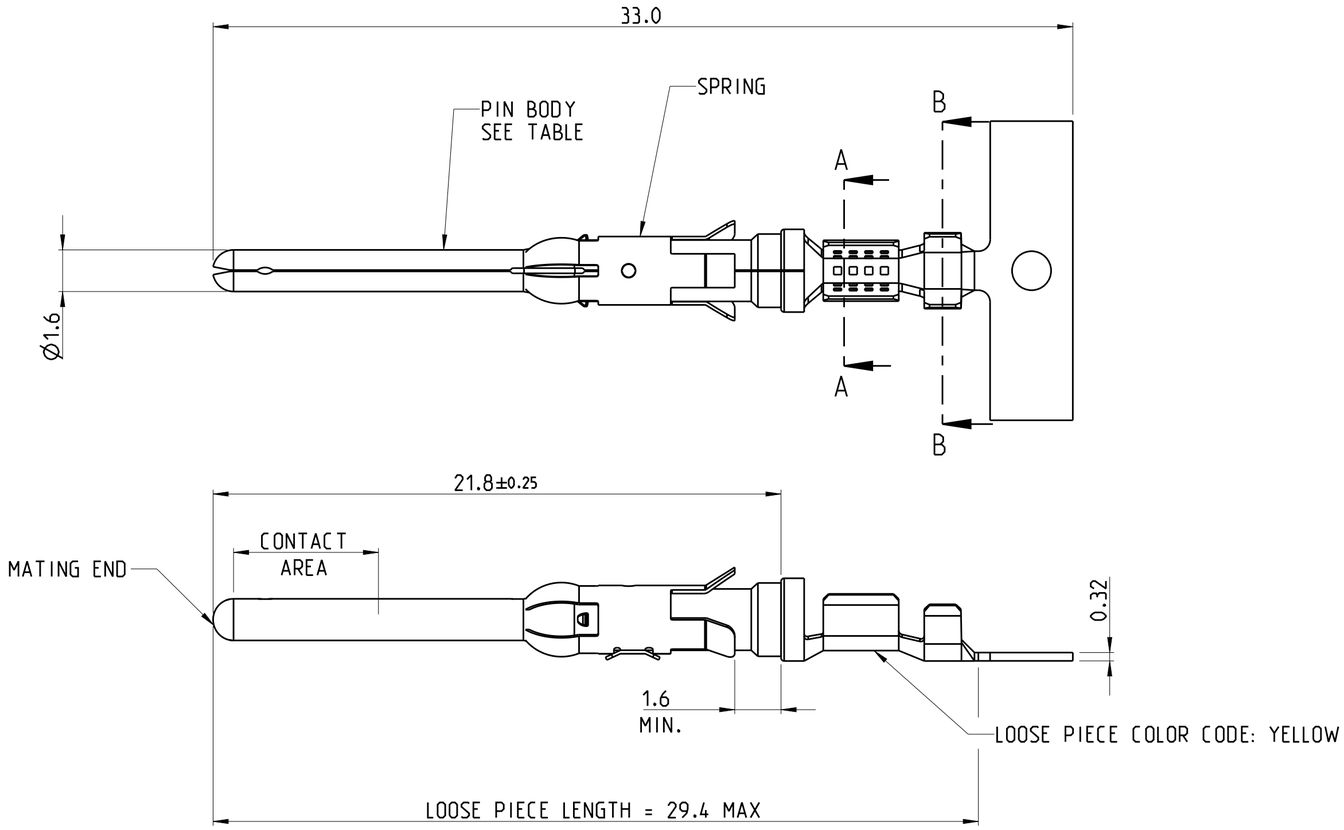

PLATING ZONES

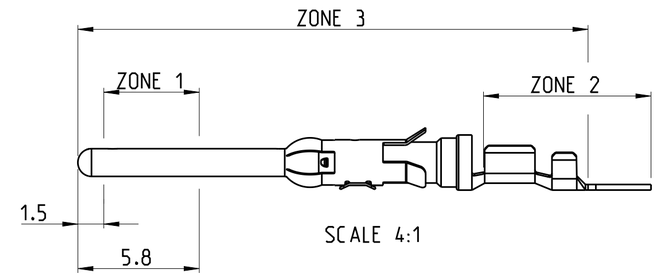

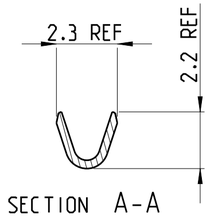

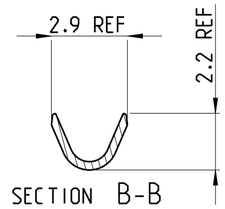

1. 1.27 MICRON MIN NICKEL PLATE OVER ZONE 3.
   0.76 MICRON MIN PRECIOUS METAL PLATE OVER ZONE 1.
   1 MICRON MIN TIN PLATE OVER ZONE 2.
   CONFORMS TO THE REQUIREMENTS OF TE CONNECTIVITY PRODUCT SPEC 108-10042
   BASED ON EIA/ECA-364-1000.01A (CONTROLLED ENVIRONMENT APPLICATIONS)
2. 1.27 MICRONS MIN NICKEL PLATE OVER ZONE 3.
   0.76 MICRON MIN PRECIOUS METAL ELECTROPLATE OVER ZONE 1.
   0.076 MICRON MIN GOLD FLASH PLATE OVER THE REMAINDER OF ZONE 3.
   CONFORMS TO THE REQUIREMENTS OF TE CONNECTIVITY PRODUCT SPEC 108-10042
   BASED ON EIA/ECA-364-1000.01A (CONTROLLED ENVIRONMENT APPLICATIONS)
3. 1.54 - 2.54 MICRON SILVER PLATE OVER ZONE 3.
4. 1.27 MICRON MIN NICKEL PLATE OVER ZONE 3.
   0.76 MICRON MIN GOLD PLATE OVER ZONE 1.
   0.076 MICRON MIN GOLDFLASH PLATE OVER THE REMAINDER OF ZONE 3.
5. 1.27 MICRON MIN NICKEL PLATE OVER ZONE 3.
   0.76 MICRON MIN GOLD PLATE OVER ZONE 1.
   1 MICRON MIN TIN PLATE OVER ZONE 2.
6. HOT-DIPPED PRETIN
7. 1.27 MICRONS MIN NICKEL PLATE OVER ZONE 3.
   1 - 3 MICRON ELECTRO-TIN PLATE OVER ZONE 3
8. 0.76 MICRON MIN NICKEL PLATE OVER ZONE 3 PER QQ-N-290
   1.5 - 2.54 MICRON SILVER PLATE OVER ZONE 3.
9. SERRATIONS CAN BE MULTILOCK OR TWO SLOTS
10. WIRE RANGE: 0.20 - 0.50 mm² (24-20 AWG)
11. INSULATION RANGE: 1.1 - 1.8 mm (.043-.070) DIA
12. SPECIAL REEL WITH 200 PCS FOR REEL-FED HANDTOOL
13. OMISSION OF 6 CONTACTS MAX PER REEL OF 5000PCS

REELING	FINISH	SPRING MATERIAL	PIN BODY	LOOSE PIECE	PART NUMBER
A	7	STAINLESS STEEL	PHBR	164163-8	164160-8
A	1	STAINLESS STEEL	BRASS		164160-7
B	1	STAINLESS STEEL	BRASS	164163-4	164160-6
A	2	STAINLESS STEEL	BRASS	164163-2	164160-4
A	7	STAINLESS STEEL	BRASS	164163-1	164160-3
B	2	STAINLESS STEEL	BRASS		164160-2

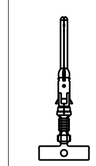

WIRE BARRELS FACE UP.

REELING DIRECTION

C — AS DIRECTION 'A' BUT BARRELS DOWN

A

B

THIS DRAWING IS A CONTROLLED DOCUMENT.

DIMENSIONS: mm

TOLERANCES UNLESS OTHERWISE SPECIFIED:
0 PLC ±0.5
1 PLC ±0.25
2 PLC ±0.15
3 PLC ±0.15
4 PLC ±-
ANGLES ±2°

MATERIAL: SEE TABLE

FINISH: -

DWN J.BRIGHT 28/11/11
CHK M.GREENER 28/11/11
APVD -
PRODUCT SPEC 108-10042
APPLICATION SPEC 114-19000
WEIGHT -

TE Connectivity

NAME: TYPE III+, SIZE 16, PIN ASS'Y LONG SERIES, 24-20 AWG, 1.1-1.8mm DIA INSULATION

SIZE A2 | CAGE CODE 00779 | DRAWING NO C-164160 | RESTRICTED TO -

CUSTOMER DRAWING | SCALE NTS | SHEET 1 OF 1 | REV H2